Low voltage
Catalogue | 2016

TeSys

Motor control and protection components

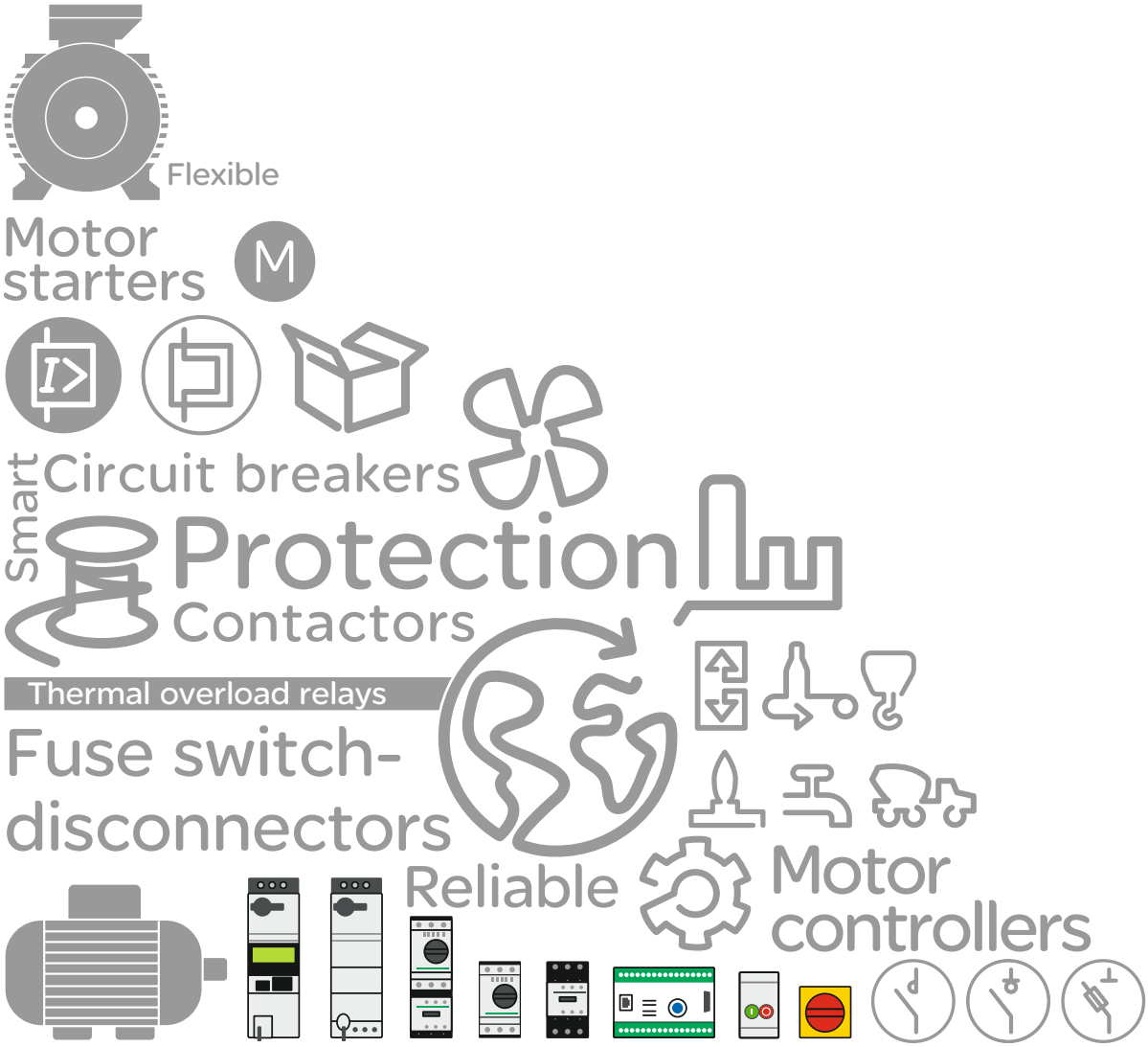

Schneider Electric

TeSys

Enter in your New catalogue

A

Assembled motor starters

Fully coordinated


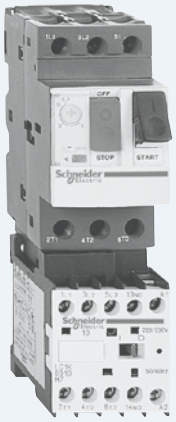



B

Components

For customer made solutions

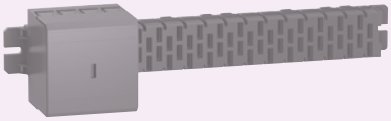
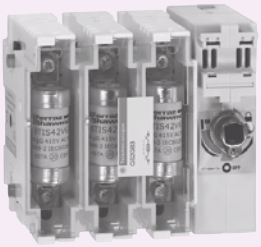

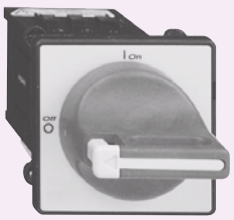

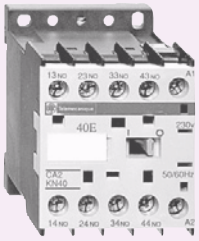


Type of product	Product views	Page	
Enclosed starters: TeSys Vario, GV, LE, LG, LJ, LF		A1/1	Enclosed starters
Open pre-cabled motor starters		A2/1	Open pre-cabled motor starters
Ultra-compact starters: TeSys H		A3/1	TeSys H
All-in-one motor starters: TeSys U		A4/1	TeSys U
All-in-one motor starters: Integral 63		A5/1	Integral 63
Complementary technical information: coordination and standards		A6/1	Coordination and standards

Type of product	Product views	Page	
Power busbar systems: Linergy HK, BZ		B1/1	Power busbar systems
Motor starter wiring systems	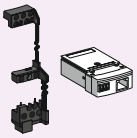	B2/1	Wiring systems
Switch-disconnectors: TeSys Vario		B3/1	Switch-disconnectors
Fuse carriers: TeSys DF, GK		B4/1	Fuse carriers
Switch-disconnectors fuses: TeSys GS	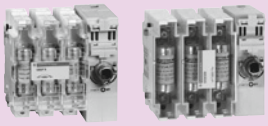	B5/1	Switch-disconnectors fuses
Circuit breakers: TeSys GV, GB		B6/1	Circuit breakers
Control relays: TeSys K, SK, D		B7/1	Control relays
Contactors: TeSys D, SK, K, SKGC, GC, GY, GF		B8/1	Contactors
High power contactors: TeSys F		B9/1	High power contactors
Bar mounted contactors: TeSys B	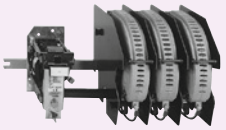	B10/1	Bar mounted contactors
Overload relays: TeSys LR● (for TeSys K, D, F), RM1X, LRD97	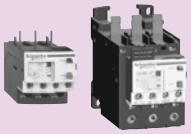	B11/1	Overload relays
Motor controllers: TeSys U, T		B12/1	Motor controllers

Let TeSys be your drive

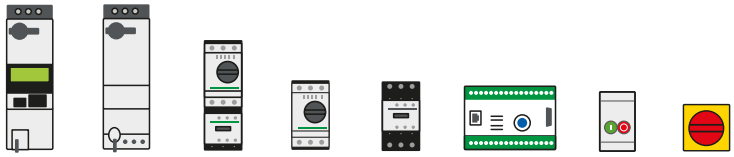

Intuitive solutions to protect, monitor and control your motor

TeSys offers the best in class features you need for protection, safety, monitoring and control of motor and power applications. TeSys matches a diverse range of solutions from the most common through the most advanced.
Wherever you are in the world, and whichever TeSys products you choose like contactors, circuit breakers, thermal relays, among others, you can count on receiving the reliability, standards-compatibility, ease of ordering and installation you need.

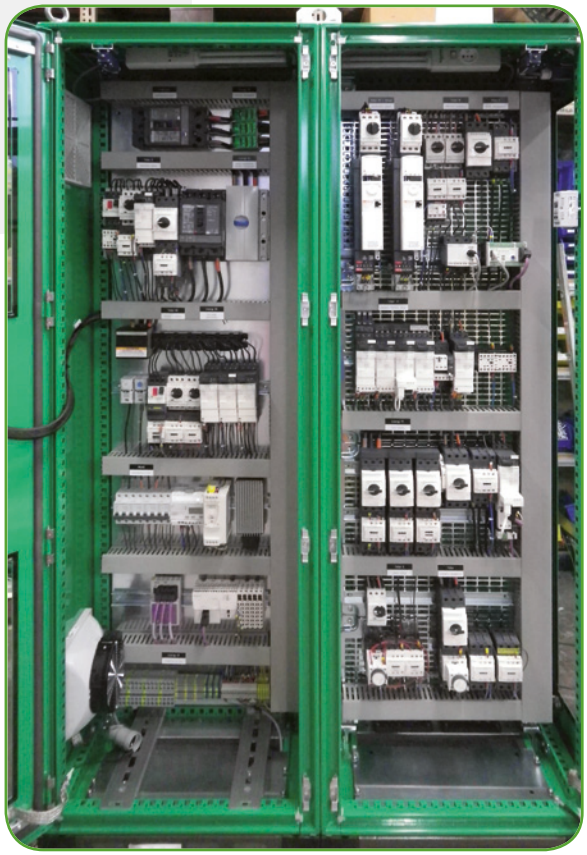

Boosts your productivity

- **Make installation easier**
  - > The widest range of installation accessories available.
  - > Intuitive installation.
- **Optimize the organization of your switchboards**
  - > Compact solutions.
  - > Low heat dissipation.
- **Increase service continuity**
  - > Total coordination.
  - > Communication and preventive maintenance.

Improves safety

- **Equip your machines with TeSys products**
  - > Integrated safety features.
  - > Compliance with international standards.

Adapts to any situation

- **Discover a wide range of protection and control products**
  - > The right response for the applications you need.
  - > A solution for each electrical function.
- **Export your machines worldwide**
  - > A single product lineup and identical part numbers worldwide.
  - > Multi-standard products IEC/UL/CSA/CCC.

Simplifies smart installation design

- **Choose the right products quickly and easily**
  - > Motor starters selection software available
  - > www.schneider-electric.com
- **Recommend supervision and control solutions**
  - > Preventive maintenance
  - > Energy management
- **Extend motor lifetime**
  - > High-performance advanced protection
  - > Energy efficiency






TeSys selection tools

To find the right combinations of products for your motor starters is simpler and quicker now.

> To download applications, connect on:

Motor Starter Selection Guide App

- It includes the most common solutions of enclosed motor starters
- Motor rated power up to 30 kW

App for iPad

Available on the App Store

TeSys Enclosed Motor Starter Solution Guide

- Quick selection of TeSys motor starter most common combinations
- Motor rated power up to 75 kW

App for iPad and iPhone

Available on the App Store

App for Smartphone and tablet

Get it on Google play

Low Voltage Motor Starter Solution Guide

- Define your motor starter solution among the complete TeSys offer
- Motor rated power up to 710 kW

App for iPad

Available on the App Store

> To discover the TeSys range and stay updated, connect on:

www.schneider-electric.com/tesys

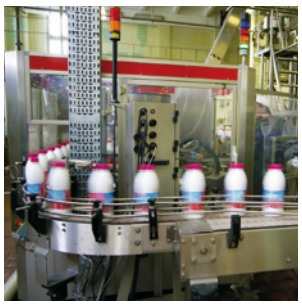
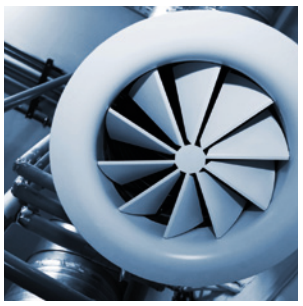



Product reference index

#

504●●	*B12/6*
490NAD911●●	*B12/7*
490NTW000●●	*B12/7*

A

A9A159●●	*B8/51*
AB1AB8●●●	*A2/15, A2/19*
AB1BC●●●●●	*A2/15, A2/19*
AB1G●	*B1/16, B4/3, B4/4, B7/7, B8/45, B11/18*
AB1R●●	*B1/16, B4/3, B4/4, B7/7, B8/45, B11/18*
ABFH20H●●●	*A4/22*
ACMGV●●●●	*A2/19*
AE3FX122	*A2/19*
AF1CD●●●	*A2/19, B10/4*
AF1VA●●●	*A2/15, A2/19*
AF1VC●●●	*A2/19, B10/4*
AK5BT01	*B1/16*
AK5GF1	*B1/14*
AK5JB●●●●	*B1/14*
AK5PA●●●●●●	*B1/15*
AK5PC●●●●●	*B1/14*
AK5PE●●	*B1/16*
AK5SB1	*B1/16*
AM1●●●●●	*A2/15, A2/19, B1/15, B10/4*
AM3PA65	*A2/15*
ASILUFC●●	*A4/26*
ASITERV2	*A4/26*
ATS48D●●	*A4/80*
ATSU01N●●●LT	*A4/70*
ATV21●●●●●●●	*A4/80*
ATV31●●●●●●	*A4/81*
ATV61●●●●●●	*A4/81*
ATV71●●●●●●	*A4/81*

B

BMXFCC●●●●	*A4/22*

C

CA2KN●●●●●	*B7/4*
CA2SK●●●●●	*B7/2*
CA3KN●●●●●	*B7/4*
CA3SK●●●●	*B7/2*
CA4KN●●●●●	*B7/5*
CAD32●●●	*A2/15, A2/17, B7/9*
CAD50●●●	*B7/9*
CR1B	*B10/12*
CR1BL●●●●●	*B9/87, B10/10, B10/12*
CR1BM●●●●●	*B9/87, B10/10, B10/12*
CR1BP●●●●●	*B10/10, B10/12*
CR1BR●●●●●	*B10/10, B10/12*
CR1F●●●●●●	*B9/7, B9/87*
CR●●●	*B9/6*
CRX●●●●●●	*B10/13*
CVX●●●●●●	*B10/13*

D

DA1TS●●●	*B11/18*
DA1TT●●●	*B11/18, B12/6*
DE1DS●●●●	*A1/20*
DE1KS●●●●●●	*A1/29*
DE2DS2	*A1/20*
DF1●●●●●	*B4/2, B4/3, B4/4*
DF22●●●●	*B4/2, B4/3*
DF2●●●●●●	*B5/10, B5/11*
DF3●●●●●	*B5/10*
DF4●●●●●●	*B5/11*
DF8●●●	*B4/2, B4/3*
DFCC●●	*B4/4*
DK1●●●●	*B4/6*
DR2SC●●●●	*B9/25, B9/26, B10/6, B10/7, B10/8, B10/9*
DR5TE●●	*B9/20, B9/22, B10/6, B10/7, B10/8, B10/9, B10/11*
DR5TF4V	*B9/22*
DX1AP25	*B7/7, B8/45, B11/9*
DZ3●●●	*A2/15, A2/19, B9/12*

E

ER1XA2●	*B11/16*
EZ2LB0601	*B9/30, B10/4, B10/10*

G

GAC●●●●	*B8/51*
GAP●●	*B8/51*
GB2CB●●	*A2/15, A2/17, B6/26*
GB2CD●●	*B6/26*
GB2CS●●	*B6/27*
GB2DB●●	*B6/26*
GB2G●●●	*B6/27*
GC●●●●●●●	*B8/48*
GF●●●●●●	*B8/50*
GK1●●●●	*A6/5, A6/15, B4/5, B4/6*
GK2AF01	*B6/13*
GS1AD10	*B5/8, B5/12*
GS1AF●●	*B5/4, B5/12*
GS1AH●●●	*B5/4, B5/6 B5/8, B5/13*
GS1AM●●●	*B5/4, B5/6, B5/8, B5/12*
GS1AN●●●	*B5/4, B5/6, B5/8, B5/12*
GS1AP●●●	*B5/4, B5/6, B5/8, B5/14*
GS1AV●●	*B5/14*
GS1AW●●	*B5/14*
GS1DD●●	*A6/6, A6/8, A6/16, A6/17, B5/4, B5/6 B5/8, B12/38*
GS1DU3	*B5/8*
GS1F●●	*B5/4*
GS1G●●	*B5/4*
GS1J●●	*B5/4*
GS1K●●●	*B5/4*
GS1L●●●	*B5/4*
GS1N●●	*B5/4*
GS1QQ●●	*B5/4*
GS2AD●●	*B5/12, B5/14*
GS2AE●●	*B5/4, B5/6, B5/8, B5/14*
GS2AF●●	*B5/4, B5/12*
GS2AH●●●●	*B5/4, B5/6, B5/8, B5/13 B5/14*
GS2AP●●	*B5/4, B5/6, B5/8, B5/14*
GS2AX1	*B5/14*
GS2DB●	*B5/6*
GS2E●●●	*B5/8*
GS2F●●●	*B5/4*
GS2G●●●	*A6/8, A6/17, B5/4, B5/6, B5/8*
GS2J●●●	*B5/4, B5/6, B5/8*
GS2K●●●	*B5/4*
GS2L●●●	*A6/8, A6/17, B5/4, B5/6*
GS2M●●●	*A6/8, A6/17 B5/6, B5/8*
GS2N●●	*A6/8, A6/17, B5/4, B5/6*
GS2PP●●	*B5/6*
GS2Q●●●	*A6/8, A6/17, B5/4, B5/6, B5/8*
GS2S●●	*A6/6, A6/7, A6/8, A6/15 A6/16, A6/17, A6/49, B5/4, B12/3, B12/38, B12/41*
GS2T●●	*B5/6, B5/8*
GS2V●●	*A6/6, A6/16, A6/49, B5/4, B5/6, B12/38*
GS●F	*A6/6, A6/7, A6/16, B12/3, B12/38, B12/41*
GS●G	*B12/41*
GS●J	*A6/5, A6/6, A6/7, A6/15, A6/16, B12/3, B12/38, B12/41*
GS●K	*A6/15, A6/49, B12/38*
GS●KK	*A6/7, B12/41*
GS●L	*A6/6, A6/7, A6/15, A6/16, A6/49, B12/3, B12/38, B12/41*
GS●N	*A6/6, A6/7 A6/15, A6/16, A6/49, B12/3, B12/38, B12/41*
GS●QQ	*A6/6, A6/7 A6/15, A6/16, A6/49, B12/3, B12/38, B12/41*
GV1F03	*B2/3, B6/13*
GV1G●●	*B2/3, B4/7, B6/13, B8/21*
GV1L3	*B6/11*
GV1V02	*B6/21*
GV2AF●●	*A2/4, A2/5, A2/6, A2/7, A2/8, A2/9, B2/3, B4/7, B6/13*
GV2AK00	*B6/11*
GV2AP03	*B6/9, B6/14*
GV2APN●●	*B6/14*
GV2CP21	*A1/7*
GV2DM●●●●●	*A2/6, A2/7*
GV2DP●●●●●	*A2/8, A2/9*
GV2E●●	*A1/7, A1/13, A1/28*
GV2G●●●	*B2/3, B4/7, B6/13, B8/21*
GV2K●●●	*A1/7, A1/13 A1/21, A1/28*
GV2L●●	*A3/8, A6/13, A6/21, B6/3, B12/39*
GV2LE●●	*A3/8, A6/11, A6/13, A6/20, B6/2*
GV2MC●●●	*A1/7, A1/21*
GV2ME●●●●●●	*A1/13, A1/21, A2/4, A2/5, A2/13, A6/9, A6/10, A6/18, B6/4 B6/5*
GV2MP●●	*A1/7*
GV2P●●	*A6/10, A6/19, B6/6*
GV2PC●●	*A1/8*
GV2RT●●	*B6/8, B6/9*
GV2V●●	*A1/7, A1/13, A1/28, B4/7, B6/14*
GV3A●●	*B6/21*
GV3APN●●	*B6/18*
GV3B●●	*B6/21*
GV3D●●	*B6/21*
GV3G●●●	*B6/17, B8/21*
GV3L●●	*A6/11, A6/12, A6/13, A6/14, A6/20, A6/21, B6/3, B12/3, B12/39*
GV3ME●●	*A6/9, A6/18, B6/6*
GV3P●●	*A6/9, A6/10, A6/18, A6/19, B6/6*
GV3PC●●	*A1/9*
GV3S	*B8/21*
GV7AB11	*B6/23*
GV7AC●●●	*B6/25, B8/20*
GV7AD●●●	*B6/23*
GV7AE11	*B6/23*
GV7AP●●	*B6/25*
GV7AS●●●	*B6/23*
GV7AU●●●	*B6/23*
GV7RE●●●	*A6/9, A6/18, B6/7*
GV7RS●●●	*A6/10, A6/19, B6/7*
GV7V01	*B6/25*
GVAD●●●●	*B6/11, B6/17*
GVAE●●●	*B4/6, B6/5, B6/11, B6/17*
GVAED●●●	*B6/17*
GVAM11	*B6/11, B6/17*
GVAN●●●	*B6/5, B6/11, B6/17*
GVA●●●●	*B6/11, B6/17*
GVAP●●●	*A4/34, B6/14, B6/18*
GVAX●●●	*B6/11*
GV●A●●●●	*A1/21*
GY●●●●●●	*B8/49*

Product reference index

K

KAC1BZ	*B3/13*
KAD1PZ	*B3/5, B3/11*
KAE1BZ	*B3/13*
KAF●●●	*B3/11*
KBD1PZ	*B3/13*
KBF●●●	*B3/13*
KCC1●●	*B3/5, B3/11, B3/13*
KCD1PZ	*B3/5, B3/11*
KCE1●●	*B3/11, B3/13*
KCF●●●	*B3/11*
KDD1PZ	*B3/13*
KDF●●●	*B3/13*
KZ●●●	*B3/5, B3/14, B3/15*

L

LA1DX●●	*B7/9, B8/15 B9/11*
LA1DY20	*B7/9, B8/15 B9/11*
LA1DZ●●	*B7/9, B8/15, B9/11*
LA1KN●●●	*B7/6, B8/43*
LA1LB021	*A5/7*
LA1LC●●●●	*A5/7, A5/9, A5/12*
LA1LD●●●●●	*A5/11*
LA1SK●●	*B7/3, B8/31, B8/32*
LA1VN●●●	*B9/5*
LA2KT●●	*B7/6, B8/43*
LA4DA2●	*B8/17*
LA4DB●●	*B8/17, B8/19*
LA4DC3U	*B8/17*
LA4DE●●	*B8/17*
LA4DFB	*B8/19*
LA4DT●●	*B8/19*
LA4DWB	*B8/19*
LA4FD●	*B9/12*
LA4FRC●	*B9/12*
LA4FT●	*B9/12*
LA4FV●	*B9/12*
LA4KA1U	*B7/7, B8/44*
LA4KC●●	*B7/7, B8/44*
LA4KE●●●	*B7/7, B8/44*
LA4SKC1U	*B7/3, B8/32, B8/47*
LA4SKE1●	*B7/3, B8/32, B8/47*
LA5D●●●●●●	*B8/21*
LA5F●●●●●●	*B9/15, B9/33*
LA5FF●●●	*B9/15, B9/33*
LA5FG●●●	*B9/15, B9/33*
LA5FH●●●	*B9/15, B9/33*
LA6DK20●	*B8/16*
LA7D●●●●	*B11/9, B11/13, B11/14*
LA7F●●●	*A2/17, B9/13, B11/13, B11/14*
LA7K0064	*B11/3*
LA8D324	*B4/5*
LA9B●●●	*B9/30, B10/4, B10/10*
LA9D09●●●	*A5/11, B8/20, B9/12*
LA9D11●●●	*A2/15, B8/20, B8/23, B8/24*
LA9D12●●●	*A2/13, B8/20, B8/23*
LA9D15017	*A2/15*
LA9D2561	*B8/20*
LA9D32●●	*A2/13, B8/20, B8/23*
LA9D40●●●	*A2/13, B8/23, B8/24*
LA9D5●●●●	*A2/13, B8/21, B8/23, B8/24*
LA9D65A69	*B8/23*
LA9D730	*B8/21*
LA9D8●●●●	*A2/13, B8/20, B8/23, B8/24*
LA9D9●●	*A2/15, A2/17, B2/3, B6/5, B6/13, B7/7, B7/11, B8/21, B8/45, B11/14, B11/9*
LA9E●●	*B2/3, B4/7, B6/13, B8/45*
LA9F1●●●●	*A2/17, A2/19, B9/13, B9/14, B9/30, B9/37, B9/39, B11/9, B11/14*
LA9F2●●●●	*A2/17, B9/13, B9/37, B9/39*
LA9F7●●	*B9/8, B9/9, B9/14, B9/30, B11/14*
LA9FF●●●●	*B9/12, B9/13, B9/32, B9/37, B9/39, B9/40*
LA9FG●●●●	*A2/15, A2/17, B9/12, B9/13, B9/32, B9/37, B9/39, B9/40*
LA9FH●●●●	*A2/17, B9/12, B9/32, B9/37, B9/39, B9/40*
LA9FJ●●●●	*A2/17, B9/13, B9/32, B9/37, B9/39*
LA9FK●●●●	*B9/12, B9/13, B9/32, B9/37, B9/39, B9/40, B9/41*
LA9FL●●●●	*B9/12, B9/13, B9/32, B9/37, B9/39, B9/41*
LA9F●4●4●	*B9/32*
LA9FX●●●	*B9/37, B9/39, B9/43*
LA9K09●●	*B8/45*
LA9LB9●●	*A4/33, B6/11*
LA9LC●●●	*A5/12*
LA9LD●●●	*A5/12*
LA9LF●●●●	*A1/33*
LA9V974	*B9/4*
LA9ZA●●●●●	*B1/7, B1/8*
LA9ZX●●●●●	*B1/6, B1/9*
LAD2●	*B7/11, B8/21*
LAD3●●	*B2/3, B2/5, B4/7, B6/13*
LAD4●●●●	*B7/10, B8/17, B8/19, B8/23, B8/24*
LAD5C●●	*B2/9*
LAD6K10●	*B7/10, B8/16*
LAD7●●●●	*B8/21, B11/9, B11/10, B11/19*
LAD8●●●	*B7/9, B8/15*
LAD90	*A4/33, B7/11, B8/21, B11/9*
LAD90●●●	*A1/19*
LAD912●●	*A2/13, B8/23*
LAD918●●	*A1/19*
LAD92560	*B8/20*
LAD93217	*A2/13, B8/23*
LAD96●●●	*B8/20, B11/9*
LAD99	*B2/5, B4/7*
LAD9AP●●●	*B2/11*
LAD9ET●	*B7/11, B8/21*
LAD9P3●	*B8/20*
LAD9PVGV	*B8/23*
LAD9R●●	*B8/23, B8/24*
LAD9SD3	*B8/23*
LAD9T4	*A1/19*
LAD9V●●	*B8/23, B8/24*
LADALLEN4	*B8/21, B11/9*
LADC22	*B7/9, B8/15, B9/11*
LADN●●●	*A2/15, A2/17, B7/9, B8/15, B9/11, B9/27, B9/30*
LADR●	*B7/10, B8/16, B9/11, B9/27, B9/30*
LADS2	*B7/10, B8/16, B9/11, B9/27*
LADS●	*B9/30*
LADT●	*A2/15, A2/17, B7/10, B8/16, B9/11, B9/27*
LADT9R●●	*B8/24*
LAD●●●	*B9/30*
LAZR9●●	*B8/22, B9/16*
LB1LD03●●●	*A5/3, A5/5*
LB6LD03●●●	*A5/3*
LC1BL●●●●●	*A6/44, A6/45, A6/47, B10/2*
LC1BM●●●●●	*A6/44, A6/45, A6/47, B10/2, B10/3*
LC1BP●●●●●	*A6/44, A6/45, A6/47, B10/2, B10/3*
LC1BR●●●●●	*A6/44, A6/45, A6/47, B10/2, B10/3*
LC1D●●●●●●●	*A2/13, A2/17, A6/5, A6/6, A6/7, A6/8, A6/9, A6/10, A6/11, A6/12, A6/13, A6/14, A6/16, A6/17, A6/18, A6/19, A6/20, A6/21, A6/44, A6/45, A6/47, B8/2, B8/3, B8/4, B8/5, B8/6, B8/7, B8/8, B8/13, B12/3, B12/38, B12/39, B12/40, B12/41*
LC1D●K●●	*B8/13*
LC1DT ●●●●●●●●	*A6/45, B8/6, B8/7, B8/11, B8/12, B8/13, B10/6, B10/8, B10/9*
LC1DWK12●●	*B8/13*
LC1F●●●●●●	*A2/17, A6/6, A6/7, A6/8, A6/9, A6/10, A6/12, A6/14, A6/16, A6/17, A6/19, A6/21, A6/44, A6/45, A6/47, B9/2, B9/3, B9/43, B12/3, B12/38, B12/40, B12/41*
LC1FG●●●●●	*B9/6*
LC1K●●●●●●	*A1/12, A1/13, A6/4, A6/5, A6/9, A6/11, B8/33, B8/35*
LC1SK ●●●●●●●●	*B8/31, B8/46*
LC1V●●●●●	*B9/4*
LC2D●●●●●●●●	*B8/9, B8/10, B8/11*
LC2DT●●●●●	*B8/11, B8/12*
LC2F●●●●	*B9/8, B9/9*
LC2K●●●●●●●	*B8/37, B8/39*
LC2V●●●●●●●	*B9/4*
LC3D●●●●●●●●	*A2/10, A6/15, A6/18, A6/20*

Product reference index

LC3F●●●●●●●● *A2/11, A6/15, A6/20*
LC3K●●●● *A2/10, A6/15, A6/18, A6/20*
LC4D●●●●● *A2/3*
LC7K●●●●●●● *B8/33, B8/35*
LC8K●●●●●●● *B8/37, B8/39*
LD1L●030● *A5/2, A5/5*
LD4LD●30● *A5/2, A5/5*
LD5LD●30● *A5/2*
LE1D●●●●● *A1/10*
LE1GV●●●●●● *A1/13*
LE1M35●●●● *A1/12*
LE2D●●●●● *A1/10*
LE2K●●●●● *A1/10*
LE●D●●●● *A1/14, A1/16, A1/18*
LE4K●●●●● *A1/14*
LE8K0●5●● *A1/14*
LF3MP●●●● *A1/31*
LF3P●●● *A1/30*
LF4MP●●●● *A1/31*
LF4P●●● *A1/30*
LG1D●●●●●●● *A1/23*
LG1K●●●●●●● *A1/23*
LG7D●●●●●● *A1/22*
LG●K●●●●●● *A1/22, A1/24*
LJ7K●●●●●● *A1/26*
LJ8K●●●●●● *A1/27*
LP1D●●●●●●● *A6/44, A6/45, B8/6*
LP1DT●●●●●●● *B10/7*
LP1K●●●●●● *A6/44, A6/45, B8/34, B8/36*
LP1SK0600●● *B8/31*
LP2K●●●●●● *B8/38, B8/40*
LP4K●●●●●● *B8/34, B8/36*
LP5K●●●●●● *B8/38, B8/40*
LR2D●●●● *A6/7, B11/6*
LR2K●●●● *A6/4, A6/5 A6/11, A6/15, A6/20, B11/2*
LR97D●●●● *B11/19*
LR9D●●●● *A6/6, A6/7, A6/8, A6/14, A6/16, A6/17, A6/20, A6/21, A6/49, B11/7, B11/10*
LR9F●●●● *A6/6, A6/7, A6/8, A6/12, A6/14, A6/15, A6/16, A6/17, A6/20, A6/21, A6/49, B9/87, B11/11, B11/12*
LRD●●●●● *A6/5, A6/6, A6/7, A6/8, A6/11, A6/12, A6/13, A6/14, A6/15, A6/16, A6/17, A6/20, A6/21, A6/49, B11/4, B11/5, B11/6, B11/7*
LS1D32●●● *A6/4, A6/5, A6/15, B4/5, B4/6*
LT3S●●●●● *B11/17*
LT4706●●● *B11/19*
LT4730●●● *B11/19*
LT4760●●● *B11/19*
LT6CT●●●● *B12/6, B12/38, B12/40, B12/41*
LTM9C●●●●● *B12/5, B12/7*
LTM9F *B12/4*
LTM9KCU *B12/5*
LTM9T●● *B12/5*
LTMC●●●● *B12/5*
LTMEV●●●● *B12/5*
LTMR08●●● *B12/4, B12/38, B12/39, B12/40, B12/41*
LTMR100●●● *B12/4, B12/38, B12/39, B12/40, B12/41*
LTMR27●●● *B12/4, B12/38, B12/39, B12/40, B12/41*
LU2B●2●● *A4/10*
LU●MB0●● *A4/12*
LU9AD7 *A4/30*
LU9AP20 *A4/35*
LU9APN2● *A4/34*
LU9BN11● *A4/14, A4/22, A4/26, A4/27, A4/28, A4/29, A4/30, A4/31, B2/13*
LU9E●●● *A4/33*
LU9G0● *A4/22*
LU9GC● *A4/28, A4/30*
LU9M●●● *A4/12, A4/14, A4/22, A4/26, A4/27, A4/28, A4/29, A4/30, A4/31, B2/13*
LU9R●● *A4/22, B2/11*
LU9RCD●● *A4/29*
LU9RDD●● *A4/29*
LU9RPB●●● *A4/30*
LU9SP0 *A4/33*
LUA●●●● *A4/10, A4/14*
LUAL●1 *A4/33*
LUB●2● *A4/10, A4/12, A4/77*
LUCA●●●● *A4/10*
LUCB●●●● *A4/13, B12/2*
LUCC●●●● *A4/13*
LUCD●●●● *A4/13, B12/2*
LUCL●●●● *A4/10, A4/76, A4/77*
LUCM●●BL *A4/13, B12/2*
LUC● *B12/3*
LUFC00 *A4/14, A4/22, B2/13*
LUFD●●● *A4/14*
LUFN●● *A4/10, A4/14*
LUFP● *A4/32*
LUFV2 *A4/14*
LUFW10 *A4/14*
LULC●●● *A4/27, A4/28, A4/29, A4/30, A4/31*
LUTC●●●● *B12/2, B12/3*
LUTM●●●● *A4/13, B12/2*
LV4●●●●● *B1/7*
LX0FF●●● *B9/34, B9/35*
LX0FG●●● *B9/34, B9/35*
LX0FH●●● *B9/34, B9/35*
LX0FJ●●● *B9/34, B9/35*
LX0FK●●● *B9/34, B9/35*
LX0FL●●● *B9/34, B9/35*
LX1D6●●● *B8/27*
LX1D8●●● *B8/28*
LX1FF●●●● *B9/17, B9/28*
LX1FG●●●● *B9/17, B9/28*
LX1FH●●●●● *B9/18, B9/29*
LX1FJ●●●● *B9/18, B9/29*
LX1FK●●●● *B9/19, B9/20, B9/29*
LX1FL●●●● *B9/19, B9/20, B9/29*
LX1FX●●● *B9/20*
LX1LD●●●●● *A5/11, A5/13*
LX1V160●●● *B9/5*
LX1V320●●● *B9/5*
LX1V610●●● *B9/5*
LX2FJ●●● *B9/26*
LX4D●●● *B8/29, B8/30*
LX4F8●● *B9/20, B9/24*
LX4FF●●● *B9/23, B9/26*
LX4FG●●● *B9/23, B9/26*
LX4FH●●● *B9/23, B9/26*
LX4FJ●●● *B9/23*
LX4FK●●● *B9/24*
LX4FL●●● *B9/24*
LX4FX●●● *B9/24*
LX5FJW●● *B9/26*
LX9FF●●● *B9/21*
LX9FG●●● *B9/21*
LX9FH●●●● *B9/21*
LX9FJ●●● *B9/22, B9/25*
LX9FK●●● *B9/22, B9/25*
LX9FL●●● *B9/22, B9/25*
LXD1●●● *B7/11, B8/25*
LXD3●●● *B8/26*
LZ●H●●●●●● *A3/6, A3/7*

N

NS●●●●●● *A6/14, A6/20, A6/21*
NSX●●●●●● *A6/12, A6/14, A6/20, A6/21, B12/3, B12/39, B12/40*
NSYTR●●●●●● *A1/7, B12/7*

P

PA1LB●● *B10/4, B10/12, B10/15*
PA1PB●● *B10/4, B10/12, B10/15*
PA1RB●● *B10/4, B10/12, B10/15*
PA2FB●● *B10/15*
PA2GB●● *B10/15*
PA2HB●● *B10/15*
PN1●B●● *B10/12, B10/15*
PN3●B●● *B10/15*
PR4FB●●●● *B10/11, B10/12*
PV1FA80 *B10/12*

R

RHZ66 *B11/18*
RM1XA●●●● *B11/15, B11/16*
RM1ZG21 *B11/15*
RM1ZH21 *B11/16*

T

TCSATV01N2 *A4/26*
TSXCAN●●●●● *B12/7*
TSXCDP●●● *A4/22*
TSXPBSCA●●● *A4/30, B12/7*

V

V●● *A1/3, B3/8*
VBD●● *B3/2, B3/7*
VBF●●●● *A1/2, B3/7*
VBFXGE● *A1/3*
VC●GUN *A1/6*
VCCD●● *B3/6*
VCCDN●● *B3/2*
VCCF●● *B3/6*
VCD●● *B3/6*
VCDN●● *B3/2*
VCF●● *B3/6*
VCF●●GE *A1/2*
VCF●GE *A1/2*
VCF●GEN *A1/2*
VCFN●●GE *A1/2*
VCFXGE● *A1/3*
VN●● *A1/3, B3/3*
VVD● *B3/7*
VVE● *B3/7*
VW3A8●●●R●● *A4/28, B12/7*
VW3A8●●●TF●● *A4/28, B12/7*
VW3G4104 *A4/70*
VZ●● *A1/4, A1/6, B3/8, B3/14*
VZN●● *A1/5, B3/3, B3/5, B3/14*

W

WB1KB●●● *B10/6, B10/7, B10/8, B10/9, B10/11*

X

XB5●●●●●●● *B11/9*
XBTN●●●● *A4/12, B12/5*
XBTZ938 *A4/12, B12/5*
XBY2U *B7/11, B8/21*
XZCG0142 *A4/26*
XZMC11 *A4/26*
XZMG12 *A4/26*

Z

Z01 *B3/15*
ZA2B●●●● *B11/13*
ZB5AA●●● *A1/19, A1/28*
ZB5AD● *A1/19, A1/28*
ZB5AL432 *A1/19, A1/28*
ZB5AS834 *A1/28*
ZBA639 *A1/19*
ZC4GM● *B10/4, B10/6, B10/7, B10/8, B10/9, B10/11, B10/12*
ZENL●●●● *A1/19, A1/28*

Part A Assembled motor starters
Fully coordinated

Type of product	Nominal range	Product views	Page
Enclosed starters: TeSys Vario, GV, LE, LG, LJ, LF	From **5.5** to **37 kW**		A1/1
Open pre-cabled motor starters	From **0.06** to **375 kW**		A2/1
Ultra-compact starters: TeSys H	Up to **3 kW** From **9 A** to **32 A**		A3/1
All-in-one motor starters: TeSys U	From **0.09** to **15 kW**		A4/1
All-in-one motor starters: Integral 63	Up to **32 kW** Up to **63 A**		A5/1
Complementary technical information: coordination and standards			A6/1

Enclosed starters

Direct-on-line

Enclosure main composition	Direct	Reversing	Range		Page
Rotary switch Add-on modules, UL versions TeSys Vario	☑		Up to **45 kW**		A1/2
Motor circuit breaker TeSys GV	☑		Up to **11 kW**		A1/7
Motor circuit breaker TeSys GV	☑		Up to **30 kW**		A1/8
Contactor + Overload relay TeSys LE1, LE2	☑	☑	Up to **37 kW**		A1/10
Motor circuit breaker + Contactor + Overload relay TeSys LE1 GV	☑		Up to **5.5 kW**		A1/12
Fuse switch-disconnector + Contactor + Overload relay TeSys LE4, LE8	☑	☑	Up to **15 kW**		A1/14

Star-delta

3 contactors + Overload relay TeSys LE3	☑		Up to **30 kW**		A1/16
Fuse switch-disconnector + 3 contactors + Overload relay TeSys LE6	☑		Up to **22 kW**		A1/18
Replacement parts					A1/19

For safety application

Motor circuit breaker + Emergency stop push button TeSys GV	☑		Up to **11 kW**		A1/21
Motor circuit breaker + Contactor + Emergency stop switch TeSys LG1	☑		Up to **9 kW**		A1/22
Motor circuit breaker + Contactor + Emergency stop push button TeSys LG7, LG8, LJ7, LJ8	☑	☑	Up to **9 kW**		A1/24
Replacement parts					A1/28

For AS-interface bus

Motor circuit breaker + Contactor + AS-Interface com. module TeSys LF3, LF4	☑	☑	Up to **5.5 kW**		A1/30

Technical Data for Designers A1/35

TeSys enclosed starters
VARIO enclosed switch-disconnectors

Direct-on-line



VCF 0GE



VCF 3GE



VCF 5GEN



VCFN 12GE

Enclosed switch-disconnectors for high performance applications

- 3-pole rotary switch-disconnectors, 10 to 140 A, conforming to IEC 60947-4-1 and IEC 60204.
- Marking on operator O I.
- Padlockable operating handle (padlocks not included).
- IP 65 degree of protection enclosures, sealable and lockable.
- Cover lockable in position “I” (ON) up to 63 A rating.

3-pole main and Emergency Stop switch-disconnectors (1)

Operator Handle	Front plate Dimensions	Ithe	Power AC-23 at 400 V	Incorporated switch body	Possible attachments (2)	Reference	Weight
	mm	A	kW				kg
Red, standard, padlockable with up to 3 padlocks (Ø 4 to Ø 8 shank)	Yellow 60 x 60	10	4	V02	2	**VCF02GE**	0.500
		16	5.5	V01	2	**VCF01GE**	0.500
		20	7.5	V0	2	**VCF0GE**	0.500
		25	11	V1	2	**VCF1GE**	0.500
		32	15	V2	2	**VCF2GE**	0.500
		50	22	V3	3	**VCF3GE**	0.930
		63	30	V4	3	**VCF4GE**	0.930
Red, long, padlockable with up to 3 padlocks (Ø 4 to Ø 8 shanks)	Yellow 90 x 90	100	37	V5	1	**VCF5GEN**	2.190
		140	45	V6	1	**VCF6GEN**	2.190

3-pole main switch-disconnectors (1)

Black, standard, padlockable with up to 3 padlocks (Ø 4 to Ø 8 shank)	Black 60 x 60	10	4	V02	2	**VBF02GE**	0.500
		16	5.5	V01	2	**VBF01GE**	0.500
		20	7.5	V0	2	**VBF0GE**	0.500
		25	11	V1	2	**VBF1GE**	0.500
		32	15	V2	2	**VBF2GE**	0.500
		50	22	V3	3	**VBF3GE**	0.930
		63	30	V4	3	**VBF4GE**	0.930
Black, long, padlockable with up to 3 padlocks (Ø 4 to Ø 8 shank)	Black 90 x 90	100	37	V5	1	**VBF5GEN**	2.190
		140	45	V6	1	**VBF6GEN**	2.190

Enclosed switch-disconnectors for standard applications

- 3-pole rotary switch-disconnectors, 10 to 32 A, conforming to IEC 60947-4-1.
- Degree of protection IP 55.

3-pole main and Emergency Stop switch-disconnectors (1)

Operator Handle	Front plate Dimensions	Ithe	Power AC-23 at 400 V	Incorporated switch body	Possible attachments (2)	Reference	Weight
	mm	A	kW				kg
Red padlockable, either by 1 (Ø 8 shank) or by 3 padlocks (Ø 6 shank)	Yellow 60 x 60	10	4	VN 12	2	**VCFN12GE** (2)	0.422
		16	5.5	VN 20	2	**VCFN20GE** (2)	0.422
		20	7.5	V0	0	**VCFN25GE**	0.512
		25	11	V1	0	**VCFN32GE**	0.512
		32	15	V2	0	**VCFN40GE**	0.512

(1) For characteristics of switch-disconnectors, please consult your Regional Sales Office.
(2) For VCF and VBF enclosures, see page A1/4. For VCFN enclosures, see page A1/5.
Note: *For VCF and VBF enclosures from 02GE to 2GE, only one auxiliary contact block VZ7 or VZ20 can be mounted.*

Dimensions: A1/36
Schemes: A1/37

TeSys enclosed starters
VARIO enclosed switch-disconnectors

Direct-on-line

PF526300.eps



VBFX GE2

Empty enclosures

IP65 enclosure with red padlockable handle operator and yellow front plate
(for mounting a main or Emergency Stop switch-disconnector)

For switch body	Ithe	Possible attachments (1)	Reference	Weight
	A			kg
VN12, VN20 V02…V2	10…32	2	**VCFXGE1**	0.340
V02…V2	10…32	4	**VCFXGE4**	0.660
V3	50	3	**VCFXGE2**	0.660
V5 - V6	100.... 140	1	**VCFXGE6**	1.04

IP65 enclosure with black padlockable handle and black front plate
(for mounting a main switch-disconnector)

VN12, VN20 V02…V2	10…32	2	**VBFXGE1**	0.340
V02…V2	10…32	4	**VBFXGE4**	0.660
V3	50	3	**VBFXGE2**	0.660
V5 - V6	100.... 140	1	**VBFXGE6**	1.04

Switch bodies for standard applications (2)

Description	Rating	Reference	Weight
	A		kg
3-pole switch-disconnectors	10	**VN12**	0.110
	16	**VN20**	0.110

Switch bodies for high performance applications (2)

Description	Rating	Reference	Weight
	A		kg
3-pole switch-disconnectors	10	**V02**	0.200
	16	**V01**	0.200
	20	**V0**	0.200
	25	**V1**	0.200
	32	**V2**	0.200
	50	**V3**	0.200
	63	**V4**	0.200

580550.eps

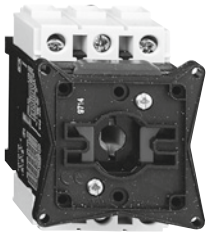

V0

(1) See pages A1/4. and A1/5.
(2) For characteristics of switch-disconnectors, please consult your Regional Sales Office.

Dimensions:
A1/36

Schemes:
A1/37

TeSys enclosed starters

VARIO enclosed switch-disconnectors

Add-on modules

Direct-on-line



VZ 0



VZ 11



VZ 15



VZ 20

Add-on modules for enclosures VCF and VBF

Description	Rating	Reference
	A	
Main pole module (mounted in enclosure)	10	**VZ02**
	16	**VZ01**
	20	**VZ0**
	25	**VZ1**
	32	**VZ2**
	50	**VZ3**
	63	**VZ4**
Neutral pole modules with early make and late break contacts	10 to 32	**VZ11**
	50 and 63	**VZ12**
	100 and 140	**VZ13**
Earthing modules	10 to 32	**VZ14**
	50 and 63	**VZ15**
	100 and 140	**VZ16**

Description	Type of contacts	Reference
Auxiliary contact block modules with 2 auxiliary contacts	N/O + N/C (1)	**VZ7**
	N/O + N/O	**VZ20**

Maximum number of add-on modules that can be fitted on a switch body

1 add-on module on each side of the switch body

VZ 7 or VZ 20	+	**V0●**	+	VZ 7 or VZ 20
or				or
VZ 11 or VZ 12	+	**V0**	+	VZ 11 or VZ 12
or				or
VZ 14 or VZ 15	+	**to**	+	VZ 14 or VZ 15
or				or
VZ 0●/VZ 0 to VZ 4	+	**V4**	+	VZ 0●/VZ 0 to VZ 4

2 add-on modules on each side of the switch body

VZ 0●	+	VZ 0●	+	**V0●**	+	VZ 0●	+	VZ 7	or	VZ 20	or	VZ 11	or	VZ 14
VZ 0	+	VZ 0	+	**V0**	+	VZ 0	+	VZ 7	or	VZ 20	or	VZ 11	or	VZ 14
VZ 1	+	VZ 1	+	**V1**	+	VZ 1	+	VZ 7	or	VZ 20	or	VZ 11	or	VZ 14
VZ 2	+	VZ 2	+	**V2**	+	VZ 2	+	VZ 7	or	VZ 20	or	VZ 11	or	VZ 14
VZ 3	+	VZ 3	+	**V3**	+	VZ 3	+	VZ 7	or	VZ 20	or	VZ 12	or	VZ 15
VZ 4	+	VZ 4	+	**V4**	+	VZ 4	+	VZ 7	or	VZ 20	or	VZ 12	or	VZ 15

Note: *The add-on modules mounted next to the switch body are main pole modules. Maximum of 3 main pole modules per switch body.*

(1) Late make N/O, early break N/C contacts.

Schemes:
A1/37

TeSys enclosed starters
VARIO enclosed switch-disconnectors
Add-on modules

Direct-on-line



VZN 11



VZN 14

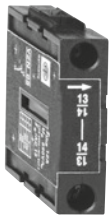

VZN 05

Add-on modules for enclosures VCFN 12GE and 20GE

Description	Rating	Reference
	A	
Main pole modules	10	**VZN12**
	16	**VZN20**
Neutral pole module with early make and late break contacts	10 and 16	**VZN11**
Earthing module	10 and 16	**VZN14**

Description	Type of contacts	Reference
Auxiliary contact block modules	1 N/O late make contact	**VZN05**
	1 N/C early break contact	**VZN06**

Maximum number of add-on modules that can be fitted on a switch body

VZN 12 or VZN 20	+		+ VZN 12 or VZN 20
		VN 12	or
			VZN 11
or		**or**	or
		VN 20	VZN 05 or VZN 06
			or
VZN 05 or VZN 06			VZN 14

Schemes:
A1/37

TeSys enclosed starters

VARIO enclosed switch-disconnectors for the North American market, conforming to UL and CSA standards

PF511002_SE_L20.eps



VC1 GUN

PF511004_SE_L26.eps



VC3 GUN

PF511008_SE_L34.eps



VC5 GUN

PF569400.eps



VZ 11

PF569401.eps



VZ 15

PF569402.eps



VZ 20

Enclosed switch-disconnectors for high performance applications

- 3-pole rotary switch-disconnectors, 25 to 140 A, conforming to IEC 60947-4-1, IEC 60204, UL 508 and CSA 22.2 n° 14.
- Marking on operator O I
- Padlockable operating handle (padlocks not included).
- NEMA type 1 and type 12 enclosures, IP65 degree of protection, sealable and lockable.

3-pole main and Emergency stop switch-disconnectors (1)

Operator		Rating		Standard power ratings of UL motors			Incor-porated switch body	Possible attach-ments	Reference (2)	Weight
Handle	Front plate Dimensions	IEC (Ith)	UL							
			600 V	240 V	480 V	600 V				
	mm	A	A	HP	HP	HP				kg
Red, standard, padlockable with up to 3 padlocks (Ø 4 to Ø 8)	Yellow 60 x 60	32	20	5	10	10	V1	2	**VC1GUN**	0.500
		40	25	5	10	15	V2	2	**VC2GUN**	0.500
		63	45	10	20	30	V3	2	**VC3GUN**	0.930
		80	63	15	30	40	V4	2	**VC4GUN**	0.930
Red, long, padlockable with up to 3 padlocks (Ø 4 to Ø 8)	Yellow 90 x 90	125	100	25	50	50	V5	1	**VC5GUN**	2.190
		175	115	30	50	60	V6	1	**VC6GUN**	2.190

Add-on modules for VC enclosure

Description	Rating	Reference
	A	
Main pole module (mounted in enclosure)	25	**VZ1**
	32	**VZ2**
	50	**VZ3**
	63	**VZ4**
Neutral pole module with early make and late break contacts	10 to 32	**VZ11**
	50 and 63	**VZ12**
	100 and 140	**VZ13**
Earthing modules	10 to 32	**VZ14**
	50 and 63	**VZ15**
	100 and 140	**VZ16**

Description	Type of contacts	Reference
Auxiliary contact block modules with 2 auxiliary contacts	N/O + N/C (3)	**VZ7**
	N/O + N/O	**VZ20**

Maximum number of add-on modules that can be fitted on a switch body

1 add-on module on each side of the switch body

VZ 7 or VZ 20	+	**V1**	+	VZ 7 or VZ 20
or				or
VZ 11 or VZ 12	+	**to**	+	VZ 11 or VZ 12
or				or
VZ 14 or VZ 15	+	**V4**	+	VZ 14 or VZ 15
or				or
VZ 1 to VZ 4	+		+	VZ 1 to VZ 4

(1) For characteristics of switch-disconnectors, please consult your Regional Sales Office.
(2) Enclosure not suitable in atmosphere contaminated with harsh substances (detergents, chlorine solvents, ketones, alcohol, aromatic hydrocarbons).
(3) Late make N/O, early break N/C contacts.

Dimensions: A1/38
Schemes: A1/38

TeSys enclosed starters

D.O.L. starters, manual control, with GV2ME thermal magnetic circuit breaker

Direct-on-line



GV2 MC



GV2 MP



GV2 CP21

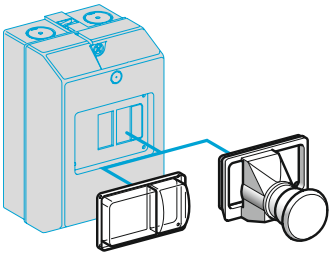

GV2 K011

Characteristics (1)

Conforming to standards	IEC 60947-2, IEC 60947-4-1
Operational voltage Ue	690 V
Material	Polycarbonate (2)

GV2	ME 01	ME 02	ME 03	ME 04	ME 05	ME 06	ME 07	ME 08	ME 10	ME 14	ME 16	ME 20	ME 21	ME 22
Ithe in enclosure (A)	0.16	0.25	0.4	0.63	1	1.6	2.5	4	6.3	9	13	17	21	23

References

Enclosures for thermal-magnetic circuit breakers GV2 ME (3)

Type	Degree of protection	Possible no. of side mounting auxiliary contact blocks on GV2 ME		Reference	Weight
		LH side	RH side		kg
Surface mounting, double insulated with protective conductor. Sealable cover	IP41	1	1	**GV2MC01**	0.290
	IP55	1	1	**GV2MC02**	0.300
			or	**GV2MCK04** (4)	0.420
	IP55 for temperature < +5 °C	1	1	**GV2MC03**	0.300
Flush mounting, with protective conductor	IP41 (front face)	1	1	**GV2MP01**	0.115
	IP41 (front face reduced flush mounting)	–	1	**GV2MP03**	0.115
	IP55 (front face)	1	1	**GV2MP02**	0.130
	IP55 (front face reduced flush mounting)	–	1	**GV2MP04**	0.130

Front plate

Description		Reference	Weight kg
For direct control, through a panel, of a chassis mounted GV2 ME	IP55	**GV2CP21**	0.800

Accessories common to all enclosures (to be ordered separately)

Description			Sold in lots of	Unit reference	Weight kg
Padlocking device (5) for GV2 ME operator (padlocking is only possible in the "O" position)		1 to 3 padlocks Ø 4 to 8 mm	1	**GV2V01**	0.075
Mushroom head pushbutton Ø 40 mm, red, IP55	Spring return (5)		1	**GV2K011**	0.052
	Emergency stop Latching (5)	Key release, key n° 455	1	**GV2K021**	0.160
		Turn to release	1	**GV2K031**	0.115
			1	**GV2K04** (3)	0.120
Sealing kit	For enclosures and front plate	IP 55 for temperature between +5 °C and +40 °C	10	**GV2E01**	0.012
		IP 55 for temperature between -20 °C and +40 °C	10	**GV2E02**	0.012
Neutral terminal			100	**NSYTRV62BL**	0.015
Partition			50	**NSYTRAC22BL**	0.003

*(1) Characteristics of **GV2ME** circuit breakers and additives: see chapter B6 "Circuit beakers".*
(2) Avoid placing this material in contact with harsh substances (detergents, chlorine solvents, ketones, alcohol, aromatic hydrocarbons).
*(3) Circuit breaker to be ordered separatly. Commercial references of **GV2ME01** to **M22**: see chapter B6 "Circuit beakers".*
*(4) Enclosure **GV2 MCK04** is fitted with a **GV2 K04** mushroom head Emergency stop pushbutton as standard.*
*(5) Supplied with IP55 **GV2 E01** sealing kit. To be fitted with enclosure **GV2 M●01**.*
(6) Padlockable in "O" position using Ø 4 to 8 mm shank padlocks.

Dimensions: A1/39
Schemes: A1/40

TeSys enclosed starters

D.O.L. starters manual control, with magnetic circuit breaker GV2 L or thermal-magnetic GV2 P

PB112219_L32.eps



GV2 PC

Characteristics (1)

Conforming to standards	IEC 60947-2, IEC 60947-4-1 (GV2 P only)
Degree of protection conforming to IEC 60529	IP65 / IK08
Operational voltage Ue	690 V
Material	Polycarbonate (2)

GV2	L/P 01	L/P 02	L/P 03	L/P 04	L/P 05	L/P 06	L/P 07	L/P 08	L/P 10	L/P 14	L/P 16	L/P 20	L/P 21	L/P 22
Ithe in enclosure (A)	0.16	0.25	0.4	0.63	1	1.6	2.5	4	6.3	9	13	17	21	23

References

Enclosures fitted with padlockable rotary handle, for GV2P/L circuit breakers (3)

Composition	Type	Reference
■ Insulating enclosure ■ Black handle, padlockable in ON/OFF position	Surface mounting	**GV2PC01**
■ Insulating enclosure ■ Red handle on yellow background, padlockable in OFF position	Surface mounting	**GV2PC02**

(1) Circuit breaker characteristics:
***GV2 L**: see chapter B6 "Circuit beakers".*
***GV2 P**: see chapter B6 "Circuit beakers".*
(2) Avoid placing this material in contact with harsh substances (detergents, chlorine solvents, ketones, alcohol, aromatic hydrocarbons).
(3) Circuit breaker to be ordered separately.
*References **GV2 L01** to **L22**: see chapter B6 "Circuit beakers".*
*References **GV2 P01** to **P22**: see chapter B6 "Circuit beakers".*

Dimensions:
A1/41

Schemes:
A1/41

TeSys enclosed starters

D.O.L. starters, manual control, with GV3P thermal magnetic or GV3L magnetic circuit breaker

PB112221_L32.eps



GV3 PC

Characteristics (1)

Conforming to standards	IEC 60947-2, IEC 60947-4-1 (GV3 P only)
Degree of protection conforming to IEC 60529	IP65/IK09
Operational voltage Ue	690 V
Material	Steel sheet

GV3	L40 P40	L50 P50	L65 P65
Ithe in enclosure (A)	35	41	55

References

Enclosures fitted with a padlockable rotary handle for GV3P/L circuit breakers (2) (3)

Composition (4)	Type	Référence	Masse kg
■ Metal enclosure ■ Black handle, padlocking in ON/OFF position ■ Circuit breaker/handle adapter	Surface mounting	**GV3PC01**	2,000
■ Metal enclosure ■ Red handle, padlocking in OFF position ■ Circuit breaker/handle adapter	Surface mounting	**GV3PC02**	2,000

(1) Circuit breakers characteristics:
***GV3L**: see chapter B6 "Circuit beakers".*
***GV3P**: see chapter B6 "Circuit beakers".*
(2) Circuit breakers to be ordered separatly:
***GV3L40** to **65**: see chapter B6 "Circuit beakers".*
***GV3P40** to **65**: see chapter B6 "Circuit beakers".*
(3) Assembling possibility: 1 GV3 P or GV3 L alone circuit breaker + 1 LC1D●●A●● contactor + GV3 S S-shape busbar.
(4) Components for customer assembly.

Dimensions:
A1/41

Schemes:
A1/41

TeSys enclosed starters
D.O.L. starters (1)
without isolating device

Direct-on-line

PB112259_L32.eps



LE1 D●●

PB112263_L32.eps



LE1 D●●A●●

PB112274_L32.eps



LE2 D●●

PB112284_L32.eps



LE2 D●●A●●

Characteristics

Conforming to standards	IEC 60947-4-1
Degree of protection conforming to IEC 60529	**LE2 K:** IP65 / IK09 **LE● D09…D35:** IP65 / IK07 **LE● D40A…D65A:** IP65 / IK09
Ambient air temperature	Operation: - 5…+ 40 °C
Operating positions	Same as that of the contactors
Material	**LE2 K** and **LE● D09…D35:** Polycarbonate (2) **LE● D40A…D65A:** Sheet steel

References

Non-reversing starters

Standard power ratings of 3-phase motors 50-60 Hz in category AC-3						Maximum current I the up to	Basic reference, to be completed by adding the voltage code (3)	Weight
220 V 230 V	380 V 400 V	415 V	440 V	500 V	660 V 690 V			
kW	kW	kW	kW	kW	kW	A		kg
2.2	4	4	4	5.5	5.5	**9**	**LE1D09●●**	0.920
3	5.5	5.5	5.5	7.5	7.5	**12**	**LE1D12●●**	0.920
4	7.5	9	9	10	10	**18**	**LE1D18●●**	1.015
5.5	11	11	11	15	15	**25**	**LE1D25●●**	1.015
7.5	15	15	15	18.5	18.5	**35**	**LE1D35●●**	4.320
11	18.5	22	22	22	30	**40**	**LE1D40A●●**	4.820
15	22	25	30	30	33	**50**	**LE1D50A●●**	4.850
18.5	30	37	37	37	37	**65**	**LE1D65A●●**	4.850
Reversing starters								
1.5	2.2	2.2	3	–	–	**6**	**LE2K065●●**	1.080
2.2	4	4	4	–	–	**9**	**LE2K095●●**	1.080
							LE2D09●● (4)	2.100
–	–	–	–	5.5	5.5	**9**	**LE2D09●●**	2.100
3	5.5	5.5	5.5	7.5	7.5	**12**	**LE2D12●●**	2.100
4	7.5	9	9	10	10	**18**	**LE2D18●●**	2.410
5.5	11	11	11	15	15	**25**	**LE2D25●●**	2.570
7.5	15	15	15	18.5	18.5	**35**	**LE2D35●●**	4.100
11	18.5	22	22	22	30	**40**	**LE2D40A●●**	5.270
15	22	25	30	30	33	**50**	**LE2D50A●●**	5.470
18.5	30	37	37	37	37	**65**	**LE2D65A●●**	5.470

(1) Overload protection must be provided by a thermal overload relay, to be ordered separately, see chapter B11 "Overload relays".
(2) Avoid placing this material in contact with harsh substances (detergents, chlorine solvents, ketones, alcohol, aromatic hydrocarbons).
(3) Standard control circuit voltages:

Volts ∼ 50/60 Hz	24	48	110	115	120	220	230	240	380	400	415	440
LE1 D09 to D35	B7	E7	F7	FE7	G7	M7	P7	U7	Q7	V7	N7	R7
LE1 D40A to D65A, LE2 D40A to D65A	–	–	–	FE7	–	–	P7	–	Q7	–	–	–
LE2 D09 to D35	B7	–	–	–	–	M7	P7	U7	Q7	V7	N7	–
LE2 K	–	–	–	–	–	M7	P7	U7	Q7	V7	–	–

(4) Selection according to the dimensions and the number of operating cycles, please consult your Regional Sales Office.

Dimensions: A1/42
Schemes: A1/43

TeSys enclosed starters
D.O.L. starters (1)
without isolating device

Direct-on-line

PB112265_L32.eps



LE1 D●●A04

PB112270_L32.eps



LE1 D●●A05

PB112281_L32.eps



LE1 D●●A09

PB112276_L32.eps



LE1 D●●A13

Description

Standard versions comprise:
■ For non-reversing starters:
□ LE1 D09...D65A:
- 1 green Start button “I”,
- 1 red Stop/Reset button “O”.

■ For reversing starters:
□ LE2 K:
- 1 Start button ⬆,
- 1 Start button ⬇,
- 1 red Stop/Reset button.

□ LE2 D09…D65A:
- 1 2-position spring return selector switch “I”-“II”,
- 1 red Stop/Reset button “O”,

For supply voltages between 380 and 440 V (codes Q7, V7, N7 or R7) the control circuit is pre-wired between phases. For other supply voltages, the control circuit must be wired by the customer.

Variants (pre-assembled)

Description	Available variants for starter (2)	Suffix to be added to the starter reference (3)
No pushbuttons on cover	LE1 D09…D65A●● LE2 D40A…D65A●●	**A04**
1 blue Reset button “R”	LE1 D09…D65A●● LE2 D40A…D65A●●	**A05**
1 3-position stay put selector switch (“I”-“O”-“II”) (“I”: Automatic Start; “O”: Stop; “II”: Manual Start) 1 blue Reset button “R”	LE1 D09…D25●●	**A09**
1 2-position stay put selector switch “O”-“I” (“O”: Stop; “I”: Manual Start) 1 blue Reset button “R”	LE1 D09…D25●●	**A13**
Mounting of an LC1 D09 contactor in an enclosure identical to LE1 D18	LE1 D09P7 LE1 D09P7A13	**T**

For LE1D09 à D35 and LE2 D09 à D35 starters:
A04, A29 and A39 versions can also be made from parts.
Empty enclosures, contactor and circuit breaker must be ordered separately.
A customer assembly.
DE1DS / **DE2DS** empty enclosures: see page A1/20.
LC1D / **LC2D** contactors: see chapter B8 "Contactors".
LRD thermal relays: see chapter B11 “Overload relays”.

(1) See previous page.
(2) Standard control circuit voltages:

Volts ∿ 50/60 Hz	220	230	240	380	400	415
LE1 D09 to D35	M7	P7	U7	Q7	V7	N7
LE1 D40A to D65A, LE2 D40A to D65A	–	P7	–	Q7	–	–

*(3) Example: **LE1 D09P7A04**.*

Dimensions: A1/42
Schemes: A1/43

TeSys enclosed starters

D.O.L. starters

with 3-phase thermal overload relay with 3 protected phases

PB112287_L32.eps



DF533789.eps



LE1 M35●●●●

Characteristics (1)

Conforming to standards	IEC 60947-4-1
Degree of protection conforming to IEC 60529	IP 65
Ambient air temperature	Operation: - 5 to + 40 °C
Operating positions	Same as for the TeSys K contactors
Material	Self-extinguishing ABS

References

Non-reversing starters

Starter LE1 M, combined with short-circuit protection components, provides type 1 or type 2 coordination, depending on the type of devices used.

Standard power ratings of 3-phase motors 50-60 Hz in category AC-3				Setting range of thermal overload relay LR2 K (2)	Basic reference, to be completed by adding the voltage code (3)
220 V 230 V	240 V	380 V 400 V	415 V		
kW	kW	kW	kW	A	
0.12	0.12	0.25	0.25	0.54…0.8	**LE1M35●●05**
0.18	0.18	0.37	0.37	0.8…1.2	**LE1M35●●06**
0.25	0.25	0.55	0.55	1.2…1.8	**LE1M35●●07**
0.37	0.37	1.1	0.75	1.8…2.6	**LE1M35●●08**
0.55	0.55	1.5	1.5	2.6…3.7	**LE1M35●●10**
1.1	0.75	2.2	2.2	3.7…5.5	**LE1M35●●12**
1.5	1.1	3	3	5.5…8	**LE1M35●●14**
2.2	2.2	4	4	8…11.5	**LE1M35●●16**
3	3	5.5	5.5	10…14	**LE1M35●●21**
3.7	4	7.5	7.5	12…16	**LE1M35●●22**

■ The standard version comprises:
□ 1 TeSys contactor LC1 K●●,
□ 1 TeSys thermal overload relay LR2 K,
□ 1 green Start button “I”,
□ 1 red Stop/Reset button “O/R”,
□ 1 yellow operating indicator.
■ For supply voltages between 380 and 440 V (codes Q7, V7, N7 or R7) the control circuit is pre-wired between phases. For other supply voltages, the control circuit must be wired by the customer.
■ Control may be pulsed or maintained.
■ An earth terminal and a neutral terminal are provided on the bottom of the enclosure.
■ For safey applications, see enclosed starters:
GV2 MC, LG1 K, LG1 D, LG7 K, LG7 D, LJ7 K, LG8 K and LJ8 K.

Variant

Starter without thermal overload relay LR2 K

Example: **LE1 M35●●**

Replacement part

Description	Basic reference, to be completed by adding the voltage code (3)
Contactor	**LC1K●●A80**

*(1) For characteristics of contactor, **LC1 K**, see chapter B8 “Contactors”.*
*For characteristics of TeSys thermal overload relay **LR2 K**, see chapter B11 “Overload relays”.*
(2) Thermal overload relay fitted as standard.
(3) Standard control circuit voltages:

Volts ∼ 50/60 Hz	24	110	220	230	240	380	400	415	440
Code	B7	F7	M7	P7	U7	Q7	V7	N7	R7

Dimensions:
A1/46

Schemes:
A1/46

TeSys enclosed starters

D.O.L. starters

with thermal magnetic circuit breaker and contactor

PB112286_L32.eps



LE1 GVMEK

Characteristics

Conforming to standards	IEC 60947-4-1
Degree of protection conforming to IEC 60529	IP 55
Ambient air temperature	Operation: - 5 to + 40 °C
Operating positions	Same as for the TeSys K contactors
Material	Polycarbonate (1)

References

Enclosures for GV2ME thermal magnetic circuit breakers and LC1K contactors (2)

Composition	Reference
Insulating enclosure with GV2E01 sealing device	**LE1GVMEK**
Insulating enclosure with GV2E01 sealing device, neutral terminal	**LE1GVMEKA59**

Accessories (to be ordered separately)

Description			Sold in lots of	Unit reference
Padlocking device (3) for GV2 ME operator (padlocking is only possible in the "O" position)		1 to 3 padlocks Ø 4 to 8 mm	1	**GV2V01**
Mushroom head "Stop" pushbutton Ø 40 mm, red	Spring return (3)		1	**GV2K011**
	Lockable Emergency Stop. IP55 (3)	Key release, key n° 455	1	**GV2K021**
		Turn to release	1	**GV2K031**
			1	**GV2K04** (4)
Sealing kit		IP 55 for temperature between +5 °C and +40 °C	10	**GV2E01**
		IP 55 for temperature between -20 °C and +40 °C	10	**GV2E02**

D.O.L. starters, non-reversing

Standard power ratings of 3-phase motors 50/60 Hz in AC-3			Setting range of thermal trips	Fixed magnetic current 13 Irth	For customer assembly	
400/ 415 V	440 V	500 V			Motor circuit breaker Reference	Contactor Reference to be completed with the reference voltage (5)
kW	kW	kW	A	A		
0.37 0.55 -	0.37 0.55 -	0.37 0.55 0.75	1...1.6	22.5	**GV2ME06**	**LC1K0610**
0.75 -	0.75 1.1	- 1.1	1.6...2.5	33.5	**GV2ME07**	**LC1K0610**
1.1 1.5	- 1.5	1.5 2.2	2.5...4	51	**GV2ME08**	**LC1K0610**
2.2 -	2.2 3	- 3	4...6.3	78	**GV2ME10**	**LC1K0610**
3 4	- 4	4 5.5	6...10	138	**GV2ME14**	**LC1K0910**
5.5	5.5	7.5	9...14	170	**GV2ME16**	**LC1K1210**

(1) Avoid placing this material in contact with harsh substances (detergents, chlorine solvents, ketones, alcohol, aromatic hydrocarbons).

(2) Starter to be ordered separatly. Commercial references of motor starters: see chapter A6 "Complementary technical information: coordination and standards".

(3) Supplied with IP 55 GV2 E01 sealing kit.

(4) Padlockable in position "O" using Ø 4 to 8 mm shank padlocks

(5) Standard control circuit voltages:

Volts	24	110	220/230	230	230/240	380/400
∿ 50/60 Hz	B7	F7	M7	P7	U7	Q7
⎓ (6)	BW3	-	-	-	-	-

(6) Coil: low consumption (1.5 W), wide range (0.7...1.3 Uc) with integral suppression device as standard.

Dimensions: A1/47

Schemes: A1/47

TeSys enclosed starters
D.O.L. starters (1)
with isolating device

Direct-on-line

PB112292_L32.eps



LE4 D●●

PB112301_L32.eps



LE8 D●●

Characteristics

Conforming to standards	IEC 60947-4-1
Degree of protection conforming to IEC 60529	**LE●K:** IP65/IK09 **LE●D09...D35:** IP65/IK07
Ambient air temperature	Operation: -5…+40 °C
Operating positions	Same as that of the contactors
Material	Polycarbonate (2)

References

Non-reversing starters

Standard power ratings of 3-phase motors 50-60 Hz in category AC-3						Maximum current I the up to	Fuses to be fitted by the customer			Basic reference, to be completed by adding the voltage code (3)	Weight
220 V 230 V	380 V 400 V	415 V	440 V	500 V	660 V 690 V		Size	Type aM			
kW	kW	kW	kW	kW	kW	A		A			kg
1.5	2.2	2.2	3	–	–	**6**	10 x 38	10		**LE4K065●●**	1.450
2.2	4	4	4	–	–	**9**	10 x 38	12		**LE4K095●●**	1.450
									or	**LE4D09●●** (4)	1.960
2.2	4	4	4	5.5	–	**9**	10 x 38	12		**LE4D09●●**	1.960
3	5.5	5.5	5.5	7.5	–	**12**	10 x 38	16		**LE4D12●●**	1.960
4	7.5	9	9	10	–	**18**	10 x 38	20		**LE4D18●●**	2.200
5.5	11	11	11	15	–	**25**	10 x 38	25		**LE4D25●●**	2.200
7.5	15	15	15	18.5	18.5	**35**	14 x 51	32		**LE4D35●●**	5.190

Reversing starters

1.5	2.2	2.2	3	–	–	**6**	10 x 38	10		**LE8K065●●**	1.600
2.2	4	4	4	–	–	**9**	10 x 38	12		**LE8K095●●**	1.600
									or	**LE8D09●●** (4)	3.550
–	–	–	–	5.5	–	**9**	10 x 38	12		**LE8D09●●**	3.550
3	5.5	5.5	5.5	7.5	–	**12**	10 x 38	16		**LE8D12●●**	3.550
4	7.5	9	9	10	–	**18**	10 x 38	20		**LE8D18●●**	3.700
5.5	11	11	11	15	–	**25**	10 x 38	25		**LE8D25●●**	4.670
7.5	15	15	15	18.5	18.5	**35**	14 x 51	32		**LE8D35●●**	5.800

(1) Overload protection must be provided by a thermal overload relay, to be ordered separately.
*References **LRD**: see chapter B11 "Overload relays".*
(2) Avoid placing this material in contact with harsh substances (detergents, chlorine solvents, ketones, alcohol, aromatic hydrocarbons).
(3) Standard control circuit voltages.

Volts ~ 50/60 Hz	24	48	110	115	120	220	230	240	380	400	415	440
LE4 D	B7	E7	F7	FE7	G7	M7	P7	U7	Q7	V7	N7	R7
LE4 K	–	–	–	–	–	M7	P7	U7	Q7	V7	–	–
LE8 K, LE8 D	–	–	–	–	–	–	P7	–	Q7	V7	–	–

(4) Selection according to dimensions and the number of operating cycles, please consult your Regional Sales Office.

Dimensions: A1/44
Schemes: A1/45

TeSys enclosed starters
D.O.L. starters (1)
with isolating device

Direct-on-line

PB112294_L32.eps



LE4 D●●A04

PB112297_L32.eps



LE4 D●●A05

Description

Standard versions comprise:
■ For non-reversing starters:
□ LE4 K and LE4:
- 1 green Start button “I”,
- 1 red Stop/Reset button “O”.

■ For reversing starters:
□ LE8 K:
- 1 Start button ⬆,
- 1 Start button ⬇,
- 1 red Stop/Reset button.

□ LE8 D:
- 1 2-position spring return selector switch “I”-“II”,
- 1 red Stop/Reset button “O”,

Protection	Power circuit	Control circuit
LE4 and LE8 K	1 3-pole isolating device	None
LE4 and LE8 D	1 3-pole isolating device	+ 1 additional pole

For supply voltages between 380 and 440 V (codes Q7, V7, N7 or R7) the control circuit is pre-wired between phases. For other supply voltages, the control circuit must be wired by the customer.

Variants (pre-assembled)

Description	Available variant for starter	Suffix to be added to the starter reference (2)
No pushbuttons on cover	LE4 D09…D35 P7 (230 V), V7 (400 V)	**A04**
1 blue Reset button “R”	LE4 D09…D35 P7 (230 V), V7 (400 V)	**A05**

(1) See previous page
*(2) Example: **LE4 D09P7A04**.*

Dimensions: A1/44
Schemes: A1/45

TeSys enclosed starters
Star-delta starters
without isolating device (1)

Star-delta

PB112288_L32R.eps



LE3 D●●

Characteristics

Conforming to standards	IEC 60947-4-1
Degree of protection conforming to IEC 60529	IP65 / IK07
Ambient air temperature	Operation: -5 to +40 °C
Operating positions	Same as that of the contactors
Material	Polycarbonate (2)

References

- Maximum operating rate: 30 starts/hour.
- Maximum starting time: 30 seconds.
- LE3 D: an LAD S2 timer imposes a delay of 40 ms ±15 ms on the delta contactor at the moment of changeover to ensure that the star contactor has sufficient breaking time.

Star-delta starters

Standard power ratings of squirrel cage motors Mains voltage - delta connection				Basic reference, to be completed by adding the voltage code (3)	Weight
220 V	380/400 V	415 V	440 V		
kW	kW	kW	kW		kg
4	7.5	7.5	7.5	**LE3D09●●**	3.650
5.5	11	11	11	**LE3D12●●**	3.650
11	18.5	22	22	**LE3D18●●**	3.750
15	30	30	30	**LE3D35●●**	5.160

*(1) Overload protection must be provided by a thermal overload relay, to be ordered separately. Select appropriate overload relay for setting at 0.58 of the full load rated motor current. References **LRD**: see chapter B11 "Overload relays".*
(2) Avoid placing this material in contact with harsh substances (detergents, chlorine solvents, ketones, alcohol, aromatic hydrocarbons).
(3) Standard control circuit voltages:

Volts ∼ 50/60 Hz	24	220	230	240	380	400	415
LE3 D	B7	M7	P7	U7	Q7	V7	N7

Dimensions: A1/48
Schemes: A1/48

TeSys enclosed starters
Star-delta starters
without isolating device (1)

Star-delta

PB112289_L32R.eps



LE3 D●●A04

Description

The standard version comprises:

- ■ LE3 D:
- □ 1 green Start button “I”,
- □ 1 red Stop/Reset button “O”.

For supply voltages between 380 and 415 V (codes Q7, V7 or N7) the control circuit is pre-wired between phases. For other supply voltages, the control circuit must be wired by the customer.

Variants (pre-assembled)

Description	Available variant for starter	Suffix to be added to the starter reference (1)
No pushbuttons on cover	LE3 D09…D35 P7 (230 V) V7 (400 V)	**A04**

*(1) Starter references, see previous page - Example: **LE3D09P7A04**.*

Dimensions:
A1/48

Schemes:
A1/48

TeSys enclosed starters
Star-delta starters (1)
with isolating device

Star-delta

PB112209_L32R.eps



LE6 D●●

Characteristics

Conforming to standards	IEC 60947-4-1
Degree of protection conforming to IEC 60529	IP 65 / IK07
Ambient air temperature	Operation: - 5 to +40 °C
Operating positions	Same as that of the contactors
Material	Polycarbonate (2)

References

- Maximum operating rate: 30 starts/hour.
- Maximum starting time: 30 seconds.
- An LA2 DS2 timer imposes a delay of 40 ms ±15 ms on the delta contactor at the moment of changeover to ensure that the star contactor has sufficient breaking time.

Standard power ratings of squirrel cage motors. Mains voltage - Delta connection				Fuses to be fitted by the customer		Basic reference, to be completed by adding the voltage code (3)	Weight
220 V	380 V 400 V	415 V	440 V	Size	Type aM		
kW	kW	kW	kW		A		kg
4	7.5	7.5	7.5	10 x 38	20	**LE6D09●●**	3.900
5.5	11	11	11	10 x 38	25	**LE6D12●●**	3.900
11	18.5	22	22	14 x 51	40	**LE6D18●●**	4.850

*(1) Overload protection must be provided by a thermal overload relay, to be ordered separately. Select appropriate overload relay for setting at 0.58 of the full load rated motor current. Reference **LRD**: see chapter B11 "Overload relays".*
(2) Avoid placing this material in contact with harsh substances (detergents, chlorine solvents, ketones, alcohol, aromatic hydrocarbons).
(3) Standard control circuit voltages.

Volts ~ 50/60 Hz	24	230	400
LE6 D	B7	P7	V7

Description

The standard version comprises:
- LE6 D:
  - 1 green Start button "I",
  - 1 red Stop/Reset button "O".

For supply voltages between 380 and 415 V (codes Q7, V7 or N7) the control circuit is pre-wired between phases. For other supply voltages, the control circuit must be wired by the customer.

Protection	Power circuit	Control circuit
LE6 D09 and D12	1 3-pole isolating device	+ 1 additional pole
LE6 D18	1 3-pole isolating device	+ 1 circuit breaker GB2 CB08

Dimensions: A1/49
Schemes: A1/49

TeSys enclosed starters
Replacement parts for starters

Direct-on-line

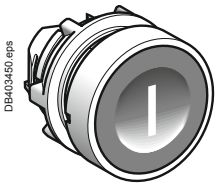

ZB5 AA331

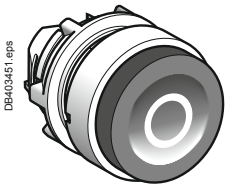

ZB5 AL432

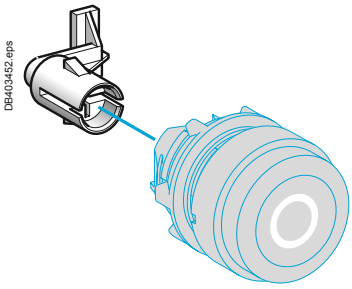

LAD 9091



ZB5 AD●

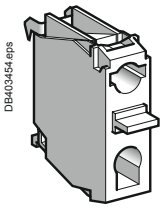

ZEN L1111

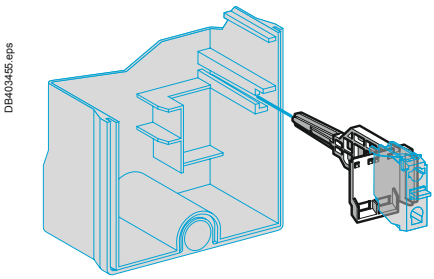

LAD 91809

Heads for Start and Stop/Reset pushbuttons

Description	For use on	Unit reference
Flush, green “I” (1)	LE1, LE3, LE4, LE6 D09...D35	**ZB5AA331**
Projecting, red “O” (1)	LE● D09...D35	**ZB5AL432**
Adaptation kit for head ZB5 AL432	LE1 D09 and D12	**LAD9091**
	LE1 D18...D35, LE2 D09...D35	**LAD91810**
	LE3, LE4, LE6 and LE8 D09...D35	**LAD9T4**

Heads for Reset pushbuttons

Flush, blue “R” (2)	LE● D09...D35	**ZB5AA0**
		+ **ZBA639** (3)
Adaptation kit for head ZB5 AA0 + ZBA 639	LE1 D09 and D12	**LAD9092**
	LE1 D18...D35, LE2 D09...D35	**LAD91810**
	LE3, LE6, LE4 and LE8 D09...D35	**LAD9T4**

Heads for selector switches

3-position stay put	LE1 D09...D35●●A09	**ZB5AD3**
2-position stay put	LE1 D09...D35●●A13	**ZB5AD2**
3-position spring return to centre	LE2 D09...D35 LE8 D09...D35	**ZB5AD5**

Contact blocks

1 N/O spring return	LE● D09...D35	**ZENL1111**
1 N/C spring return	LE● D09...D35	**ZENL1121**
Mounting for contact block	LE1 D09 and D12	**LAD90909**
	LE1 D18...D35, LE2, LE3, LE4, LE6 and LE8 D09...D35	**LAD91809**

(1) Remember to order adaptation kit LAD 9091 or LAD 91810 or LAD 9TA, depending on size.
(2) Remember to order adaptation kit LAD 9092 or LAD 91810 or LAD 9TA, depending on size.
(3) Sold in lots of 10.

TeSys enclosed starters
Replacement parts for starters

Direct-on-line

PB112264_L32.eps



DE1 DS1A04

PB112269_L32.eps



DE1 DS1A05

PB112259_L32.eps



DE1 DS1

PB112275_L32.eps



DE1 DS1A13

Empty enclosures for starters without isolating device

Head(s) mounted on cover	Designed for use with	Reference
Without	LE1 D09 and D12	**DE1DS1A04**
	LE1 D18...D35	**DE1DS2A04**
	LE2 D09...D35	**DE1DS2A04**
1 flush blue head “R”	LE1 D09 and D12	**DE1DS1A05**
	LE1 D18...D35	**DE1DS2A05**
	LE2 D09...D35	**DE1DS2A05**
1 flush green head “I” 1 projecting red head “O”	LE1 D09 and D12	**DE1DS1**
	LE1 D18...D35	**DE1DS2**
1 flush blue head “R” 1 switch with 3 fixed positions	LE1 D09 and D12	**DE1DS1A09**
	LE1 D18...D35	**DE1DS2A09**
1 flush blue head “R” 1 switch with 2 fixed positions	LE1 D09 and D12	**DE1DS1A13**
	LE1 D18...D35	**DE1DS2A13**
1 flush blue head “R” 1 switch 3 positions with spring center	LE2 D09...D35	**DE2DS2**

TeSys enclosed starters

D.O.L. starters, manual control, with GV2ME thermal magnetic circuit breaker

Assembly of a safety enclosure

For safety applications

PB112215_L3Z.eps



GV2 MC + GV2 K04

Assembly of a safety enclosure

(conforming to standards IEC 60974-4-1, IEC 60204-1)

Type of product	Page	Reference
Enclosure	A1/7	**GV2MC●●**
Circuit breaker	See chapter B6 “Circuit breakers”	**GV2ME●●**
Undervoltage trip or INRS trip [1]	See chapter B6 “Circuit breakers”	**GV●A●●●●**
		or **GV●AX●●●**
Mushroom head Emergency stop pushbutton Ø 40 mm, red	A1/7	**GV2K021**
		or **GV2K031**
		or **GV2K04**

(1) Safety device for dangerous machines conforming to INRS and VDE 0113.

TeSys enclosed starters

Safety starters

Conforming to standards: IEC 60204-1 "Safety of machinery - Electrical equipment of machines"

For safety applications

PB111880_L32R.eps



LG7 K06●●

PB111886_L32R.eps



LG7 D12●●

Characteristics

Conforming to standards	IEC 60947-4-1, IEC 60204-1
Material	Polycarbonate (1)

References

Non-reversing starters (with pushbutton control of isolation)

Standard power ratings of 3-phase motors 50-60 Hz in category AC-3			Circuit breaker	Dust & damp protected starter	Weight
220/ 230 V	400/ 415 V	440 V	Setting range of thermal trips	Basic reference, to be completed by adding the voltage code (2)	
kW	kW	kW	A		kg
–	0.06	0.06	0.16…0.25	**LG7K06●●02**	1.300
0.06	0.09	0.12	0.25…0.40	**LG7K06●●03**	1.300
–	0.18	0.18	0.40…0.63	**LG7K06●●04**	1.300
0.12	0.25	0.37	0.63…1	**LG7K06●●05**	1.300
0.25	0.55	0.55	1…1.6	**LG7K06●●06**	1.300
0.37	0.75	1.1	1.6…2.5	**LG7K06●●07**	1.300
0.75	1.5	1.5	2.5…4	**LG7K06●●08**	1.300
1.1	2.2	3	4…6.3	**LG7K06●●10**	1.300
1.5	4	4	6…10	**LG7K09●●14**	1.450
3	5.5	5.5	9…14	**LG7D12●●16**	1.600
4	7.5	9	13…18	**LG7D18●●20**	1.630
4	9	9	17…23	**LG7D18●●21**	1.630

Specifications

Functions performed by the starter:
- isolation,
- locking of isolation fitted as standard as from LG7 K09,
- lockable Emergency Stop (1/4 turn) (3),
- short-circuit protection,
- overload protection,
- voltage drop protection from LG7 K09. For LG7 K06, a GVA X●● undervoltage trip may be added,
- pushbutton control: 1 white Start button “I” and 1 black Stop button “O”,
- degree of protection of enclosure: IP55, double insulated.

Switching back on of power supply after tripping must be by a deliberate action.
A GV2 SN●● indicator light may be added (to be assembled by customer), please consult your Regional Sales Office.
For supply voltages between 380 and 415 V (codes Q7, V7 or N7) the control circuit is pre-wired between phases.
For other supply voltages, the control circuit must be wired by the customer.

Variants (pre-assembled)

See page A1/25.

(1) Avoid allowing the material to come into contact with strong bases (detergents, chlorine solvents, ketones, alcohol, aromatic hydrocarbons).
(2) Standard control circuit voltages:

LG7 K						
Volts ∼ 50/60 Hz	24	220/ 230	230	380/ 400	400	400/ 415
Code	B7	M7	P7	Q7	V7	N7

LG7 D						
Volts ∼ 50/60 Hz	24	220/ 230	230	380/ 400	400	415
Code	B7	M7	P7	Q7	V7	N7

*(3) **LG7 K06**: the mushroom head type Emergency Stop acts mechanically on the circuit breaker.*
***LG7 K09**, **D12**, **D18**: the Emergency Stop function is performed by an undervoltage trip, acting on the circuit breaker.*
This circuit breaker is always supplied pre-wired for use on 380/400/415 V 50 Hz.
For a 60 Hz supply, please consult your Regional Sales Office.

Dimensions: A1/50
Schemes: A1/51

TeSys enclosed starters

Safety starters

Conforming to standards: IEC 60204-1 "Safety of machinery - Electrical equipment of machines"

For safety applications

PB111693_L32R.eps



LG1 K●●

Characteristics

Conforming to standards	IEC 60947-4-1, IEC 60204-1
Material	Polycarbonate (1)

References

Non-reversing starters (with rotary operator for control of isolation)

Enclosure cannot be opened when energised in position "I".

Standard power ratings of 3-phase motors 50-60 Hz in category AC-3			Circuit breaker	Dust & damp protected starter	Weight
220/ 230 V	400/ 415 V	440 V	Setting range of thermal trips	Basic reference, to be completed by adding the voltage code (2)	
kW	kW	kW	A		kg
–	0.06	0.06	0.16…0.25	**LG1K065●●02**	0.970
0.06	0.09	0.12	0.25…0.40	**LG1K065●●03**	0.970
–	0.18	0.18	0.40…0.63	**LG1K065●●04**	0.970
0.12	0.25	0.25	0.63…1	**LG1K065●●05**	0.970
0.25	0.55	0.55	1…1.6	**LG1K065●●06**	0.970
0.37	0.75	1.1	1.6…2.5	**LG1K065●●07**	0.970
0.75	1.5	1.5	2.5…4	**LG1K065●●08**	0.970
1.1	2.2	3	4…6.3	**LG1K065●●10**	0.970
1.5	4	4	6…10	**LG1K095●●14**	1.120
3	5.5	5.5	9…14	**LG1D122●●16**	1.270
4	7.5	9	13…18	**LG1D182●●20**	1.290
4	9	9	17…23	**LG1D182●●21**	1.290

Specifications

Functions performed by the starter:
- isolation,
- locking of isolation,
- lockable Emergency Stop (red/yellow switch-disconnector),
- short-circuit protection,
- overload protection,
- pushbutton control: 1 white Start button "I" and 1 black Stop button "O",
- degree of protection of enclosure: IP55, double insulated.

Switching back on of power supply after tripping must be by a deliberate action.
A GVA X●● undervoltage trip may be added.
A GV2 SN●● indicator light may be added (to be assembled by customer), please consult your Regional Sales Office.
For supply voltages between 380 and 415 V (codes Q7, V7 or N7) the control circuit is pre-wired between phases.
For other supply voltages, the control circuit must be wired by the customer.

Variants (pre-assembled)

See page A1/25.

(1) Avoid allowing the material to come into contact with strong bases (detergents, chlorine solvents, ketones, alcohol, aromatic hydrocarbons).
(2) Standard control circuit voltages:

LG1 K					
Volts ∿ 50/60 Hz	**220/ 230**	**230**	**380/ 400**	**400**	**400/ 415**
Code	M7	P7	Q7	V7	N7

LG1 D					
Volts ∿ 50/60 Hz	**220**	**230**	**380**	**400**	**415**
Code	M7	P7	Q7	V7	N7

Dimensions: A1/50
Schemes: A1/51

TeSys enclosed starters

Safety starters
Conforming to standards: IEC 60204-1 "Safety of machinery - Electrical equipment of machines"

PB111898_L32R.eps



LG8 K06●●

PB111899_L32R.eps



LG8 K09●●

Characteristics

Conforming to standards	IEC 60947-4-1, IEC 60204-1
Material	Polycarbonate (1)

References

Reversing starters (with pushbutton control of isolation)

Standard power ratings of 3-phase motors 50-60 Hz in category AC-3			Circuit breaker Setting range of thermal trips	Dust & damp protected starter Basic reference, to be completed by adding the voltage code (2)	Weight
220/ 230 V	400/ 415 V	440 V			
kW	kW	kW	A		kg
–	0.06	0.06	0.16…0.25	**LG8K06●●02**	1.640
0.06	0.09	0.12	0.25…0.40	**LG8K06●●03**	1.640
–	0.18	0.18	0.40…0.63	**LG8K06●●04**	1.640
0.12	0.25	0.25	0.63…1	**LG8K06●●05**	1.640
0.25	0.55	0.55	1…1.6	**LG8K06●●06**	1.640
0.37	0.75	1.1	1.6…2.5	**LG8K06●●07**	1.640
0.75	1.5	1.5	2.5…4	**LG8K06●●08**	1.640
1.1	2.2	3	4…6.3	**LG8K06●●10**	1.640
1.5	4	4	6…10	**LG8K09●●14**	1.640
3	5.5	5.5	9…14	**LG8K12●●16**	1.640

Specifications

Functions performed by the starter:
- isolation,
- locking of isolation fitted as standard as from LG8 K09,
- lockable Emergency Stop (1/4 turn) (3),
- short-circuit protection,
- overload protection,
- voltage drop protection from LG8 K09. For LG8 K06, a GVA X●● undervoltage trip may be added,
- control by selector switch “I-II”, position non maintained and Stop press button “O” (black),
- degree of protection of enclosure: IP55, double insulated.

Switching back on of power supply after tripping must be by a deliberate action.
A GV2 SN●● indicator light may be added (to be assembled by customer), please consult your Regional Sales Office.
For supply voltages between 380 and 415 V (codes Q7, V7 or N7) the control circuit is pre-wired between phases.
For other supply voltages, the control circuit must be wired by the customer.

Variants (pre-assembled)

See page A1/25.

(1) Avoid allowing the material to come into contact with strong bases (detergents, chlorine solvents, ketones, alcohol, aromatic hydrocarbons).
(2) Standard control circuit voltages:

Volts ~ 50/60 Hz	220/ 230	380/ 400	400/ 415
Code	M7	Q7	N7

(3) ***LG8 K06****: the mushroom head type Emergency Stop acts mechanically on the circuit breaker.*
LG8 K09*: the Emergency Stop function is performed by an undervoltage trip, acting on the circuit breaker.*
This circuit breaker is always supplied pre-wired for use on 380/400/415 V 50 Hz.
For a 60 Hz supply, please consult your Regional Sales Office.

Dimensions: A1/50
Schemes: A1/51

TeSys enclosed starters

Safety starters
Conforming to standards: IEC 60204-1 "Safety of machinery - Electrical equipment of machines"

PB111887_L32R.eps



LG7 ●●A04

Variants (pre-assembled)

Description	Variants available for starter	Suffix to be added to the starter reference (1)
With Emergency Stop No control pushbuttons	LG7 K06M705...K09M714 LG7 K06Q705...K09Q714	**A04**
With Emergency Stop, mushroom head (2)	LG1 K06M705...K09M714 LG1 K06Q705...K09Q714	**A37**
With padlocking facility (fitted as standard from LG7 K09)	LG7 K06M705...K06M710	**A29**
Without circuit breaker (3) (or undervoltage release voltage)	LG1●●M7, LG1●●Q7, LG7●●M7, LG7●●Q7, LG8●●M7, LG8●●Q7	(4)

For LG7 starters: A04, A29 and A39 variants (Without Emergency Stop) can also be made from parts.
Empty enclosures, contactor and circuit breaker must be ordered separately.
A customer assembly.
DE1KS empty enclosures: see page A1/29.
LC1 K contactors: see chapter B8 "Contactors".
GV2 ME circuit breakers: see chapter B6 “Circuit breakers”.

*(1) Example: **LG7 D12M716A04**.*
(2) The mushroom head type Emergency Stop acts mechanically on the circuit breaker.
(3) Order circuit breaker separately. References GV2 ME: see chapter B6 “Circuit beakers”.
*(4) Delete the last 2 digits of the selected starter reference. Example: **LG1 K065●●08** becomes **LG1 K065●●**.*

TeSys enclosed starters

Safety starters
Conforming to standards: IEC 60204-1 "Safety of machinery - Electrical equipment of machines"

For safety applications

PB111680_L32R.eps



LJ7 K06●●

Characteristics

Conforming to standards	IEC 60947-4-1, IEC 60204-1
Material	Polycarbonate (1)

References

Non-reversing motor starters with integral transformer, pre-wired for operation on a 3-phase 380 to 400 V 50 Hz supply (with pushbutton control of isolator function)

Standard power ratings of 3-phase motors 50 Hz in category AC-3	Circuit breaker	Dust and damp protected starter	Weight
380/400 V	Setting range of thermal trips	Reference (2)	
kW	A		kg
0.06	0.16…0.25	**LJ7K06Q702**	2.270
0.09	0.25…0.40	**LJ7K06Q703**	2.270
0.18	0.40…0.63	**LJ7K06Q704**	2.270
0.25	0.63…1	**LJ7K06Q705**	2.270
0.55	1…1.6	**LJ7K06Q706**	2.270
0.75	1.6…2.5	**LJ7K06Q707**	2.270
1.5	2.5…4	**LJ7K06Q708**	2.270
2.2	4…6.3	**LJ7K06Q710**	2.270
4	6…10	**LJ7K09Q714**	2.270

Specifications

Functions performed by the starter:
- isolation,
- locking of isolation fitted as standard on LJ7 K09,
- lockable Emergency Stop (1/4 turn) (3),
- short-circuit protection,
- overload protection,
- voltage drop protection from LJ7 K09. For LJ7 K06, a GVA X●● undervoltage trip may be added,
- pushbutton control: 1 white Start button “I” and 1 black Stop button “O”,
- terminal allowing connection of a volt-free contact, if required, in the control circuit,
- degree of protection of enclosure: IP55, double insulated.

Switching back on of power supply after tripping must be by a deliberate action.
A GV2 SN●● indicator light may be added (to be assembled by customer), please consult your Regional Sales Office.
Integral transformer: 400/24 V, 25 VA.

Variants (pre-assembled)

Description	Variants available for starter	Suffix to be added to the starter reference (4)
With Emergency Stop No control pushbuttons	LJ7 K06Q705...K09Q714	**A04**
With padlocking facility (fitted as standard on LJ7 K09)	LJ7 K06Q705...K06Q710	**A29**
Without circuit breaker (6) (or undervoltage release voltage)	LJ7	(5)
Without circuit breaker (6) With Emergency Stop No control pushbuttons	LJ7 K09Q7	**A04**
Without circuit breaker (6) Without Emergency Stop (if the emergency stop is on the machine)	LJ7 K09Q7	**A39**
Without circuit breaker (6) Without Emergency Stop No control pushbuttons	LJ7 K09Q7	**A04A39**

(1) Avoid placing this material in contact with harsh substances (detergents, chlorine solvents, ketones, alcohol, aromatic hydrocarbons).
*(2) In the reference, the voltage code **Q7 (380/400 V) indicates the power supply voltage** to which the starter will be connected, it being assumed that the contactor has a ∼ 24 V coil (see control circuit scheme).*
*(3) **LJ7 K06**: the mushroom head type Emergency Stop acts mechanically on the circuit breaker.*
***LJ7 K09**: the Emergency Stop function is performed by an undervoltage trip **GV AX385**, acting on the circuit breaker.*
This circuit breaker is always supplied pre-wired for use on 380/400 V 50 Hz.
*(4) Example: **LJ7 K06Q705A04**.*
*(5) Delete the last 2 digits of the selected starter reference. Example: **LJ7 K06Q705** becomes **LJ7 K06Q7**.*
*(6) Circuit breaker to be ordered separatel. References **GV2 ME**: see chapter B6 “Circuit beakers”.*

Dimensions:
A1/52

Schemes:
A1/53

TeSys enclosed starters

Safety starters
Conforming to standards: IEC 60204-1 "Safety of machinery - Electrical equipment of machines"

For safety applications

Characteristics

Conforming to standards	IEC 60947-4-1, IEC 60204-1
Material	Polycarbonate (1)

References

Reversing motor starters with integral transformer, pre-wired for operation on a 3-phase 380 to 400 V 50 Hz supply (with pushbutton control of isolator function)

PB111898_L32R.eps



LJ8 K06●●

PB111899_L32R.eps



LJ8 K09●●

Standard power ratings of 3-phase motors 50 Hz in category AC-3	Circuit breaker	Dust and damp protected starter	Weight
380/400 V	Setting range of thermal trips	Reference (2)	
kW	A		kg
0.06	0.16…0.25	**LJ8K06Q702**	2.650
0.09	0.25…0.40	**LJ8K06Q703**	2.650
0.18	0.40…0.63	**LJ8K06Q704**	2.650
0.25	0.63…1	**LJ8K06Q705**	2.650
0.55	1…1.6	**LJ8K06Q706**	2.650
0.75	1.6…2.5	**LJ8K06Q707**	2.650
1.5	2.5…4	**LJ8K06Q708**	2.650
2.2	4…6.3	**LJ8K06Q710**	2.650
4	6…10	**LJ8K09Q714**	2.650

Specifications

Functions performed by the starter:
- isolation,
- locking of isolation fitted as standard on LJ8 K09,
- lockable Emergency Stop (1/4 turn) (3),
- short-circuit protection,
- overload protection,
- voltage drop protection from LJ8 K09. For LJ8 K06, a GVA X●● undervoltage trip may be added,
- 1 spring return selector switch "I-II" for command, non-maintained positions and 1 Stop pushbutton control “O” (black),
- terminal allowing connection of a volt-free contact, if required, in the control circuit,
- degree of protection of enclosure: IP55, double insulated.

Switching back on of power supply after tripping must be by a deliberate action.
A GV2 SN●● indicator light may be added (to be assembled by customer), please consult your Regional Sales Office.
Integral transformer: 400/24 V, 25 VA.

Variants (pre-assembled)

Description	Variants available for starter	Suffix to be added to the starter reference
Without circuit breaker (5) (or undervoltage release voltage)	LJ8	(4)

(1) Avoid placing this material in contact with harsh substances (detergents, chlorine solvents, ketones, alcohol, aromatic hydrocarbons).
*(2) In the reference, the voltage code **Q7 (380/400 V) indicates the power supply voltage** to which the starter will be connected, it being assumed that the contactor has a ∼ 24 V coil (see control circuit scheme).*
*(3) **LJ8 K06**: the mushroom head type Emergency Stop acts mechanically on the circuit breaker.*
***LJ8 K09**: the Emergency Stop function is performed by an undervoltage trip **GV AX385**, acting on the circuit breaker. This circuit breaker is always supplied pre-wired for use on 380/400 V 50 Hz.*
*(4) Delete the last 2 digits of the selected starter reference. Example: **LJ8 K06Q702** becomes **LJ8 K06Q7**.*
*(5) Circuit breaker to be ordered separatel. References **GV2 ME**: see chapter B6 “Circuit beakers”.*

Dimensions: A1/52
Schemes: A1/53

TeSys enclosed starters
Replacement parts for starters

For safety applications

DB403450.eps



ZB5 AA331

DB403451.eps

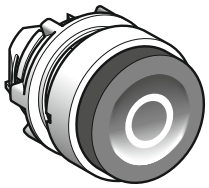

ZB5 AL432

DB403453.eps

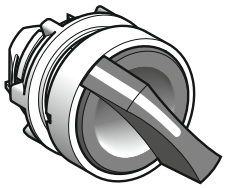

ZB5 AD5

DB403454.eps

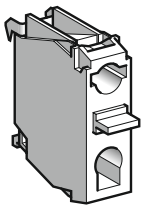

ZEN L1111

8274_L32R.eps



GV2 K04

110349_L32R.eps



ZB5 AS834

Heads for Start and Stop/Reset pushbuttons

Description	For use on	Unit reference
Flush, green “I”	LG1, LG7, LJ7	**ZB5AA331**
Projecting, red “O”	LG1, LG7, LJ7, LG8, LJ8	**ZB5AL432**

Heads for selector switches

3-position stay put	LG8, LJ8	**ZB5AD5**

Mushroom head pushbutton

Emergency stop, latching, turn to release, Ø 40 mm, red, IP55	LG1 ●A37, LG7 K06, LJ7 K06, LG8 K06, LJ8 K06	**GV2K04** (1) (2)
	LG7 K09...D18, LJ7 K09, LG8 K09...K12, LJ8 K09	**ZB5AS834**

Contact blocks

1 N/O spring return	LG1, LG7, LJ7, LG8, LJ8	**ZENL1111**
1 N/C spring return	LG1, LG7, LJ7, LG8, LJ8	**ZENL1121**

Add-on blocks

Padlocking device (2) for GV2 ME operator (padlocking is only possible in the “O” position), 1 to 3 padlocks Ø 4 to 8 mm		LG1, LG7, LJ7, LG8, LJ8	**GV2V01**
Sealing kit	IP 55 for temperature between +5 °C and +40 °C	LG1, LG7, LJ7, LG8, LJ8	**GV2E01**
	IP 55 for temperature between -20 °C and +40 °C	LG1, LG7, LJ7, LG8, LJ8	**GV2E02**

(1) Registration the “O” position by a padlock Ø4 to 8 mm.
*(2) Supplied with IP55 **GV2 E01** sealing kit.*

TeSys enclosed starters
Replacement parts for starters

For safety applications

PB111891_L32R.eps



DE1 KS217A06

PB111892R.eps



DE1 KS217A06A29

PB111886_L32R.eps



DE1 KS217A06A37

PB111889_L32R.eps



DE1 KS217A29A37

Empty enclosures for security starters

Designed for use with	Head(s) mounted on cover	Add-on blocks	Reference
LG7	Without		**DE1KS217A04**
	1 flush white head “I” 1 projecting black head “O”		**DE1KS217A06**
	1 flush white head “I” 1 projecting black head “O”	Padlocking devices	**DE1KS217A06A29**
	1 flush white head “I” 1 projecting black head “O” 1 head emergency stop	Padlocking devices	**DE1KS217A06A37**
	Without	Padlocking devices	**DE1KS217A29**
	1 head emergency stop		**DE1KS217A37**
	1 head emergency stop	Padlocking devices	**DE1KS217A29A37**

TeSys enclosed starters
D.O.L. starters for AS-Interface cabling system

Starters for AS-interface bus



LF3 P●●E



LF3 P●●EA79A74



LF4 P●●E



LF4 P●●EA79A74

Characteristics

Conforming to standards		IEC 60204-1, IEC 60947-4-1, IEC 60439-1
Degree of protection	Conforming to IEC 60529	IP54
Ambient air temperature	Operation	-5 to +40 °C
Operating positions		Same as that of the contactors
Material		**LF● P**: polycarbonate (1)

Starters in insulated (plastic) enclosure

Standard power ratings of 3-phase motors 50-60 Hz in category AC-3		Circuit breaker adjustment range of thermal trips	Starter with extended addressing	Weight
220/230 V	400/415 V			
kW	kW	A		kg
Non-reversing starters with rotary control knob, with black handle on blue background				
–	–	Without	**LF3P00E** (2)	1.020
–	0.06	0.16…0.25	**LF3P02E**	1.300
0.06	0.09	0.25…0.40	**LF3P03E**	1.300
– –	0.12 0.18	0.40…0.63	**LF3P04E**	1.300
0.09 0.12	0.25 –	0.63…1	**LF3P05E**	1.300
0.18 0.25	0.37 0.55	1…1.6	**LF3P06E**	1.350
0.37	0.75	1.6…2.5	**LF3P07E**	1.350
0.55 0.75	1.1 1.5	2.5…4	**LF3P08E**	1.350
1.1	2.2	4…6.3	**LF3P10E**	1.350
1.5 –	3 4	6…10	**LF3P14E**	1.350
2.2 3	5.5 –	9…14	**LF3P16E**	1.350
Reversing starters with rotary control knob, with black handle on blue background				
–	–	Without	**LF4P00E** (2)	1.020
–	0.06	0.16…0.25	**LF4P02E**	1.550
0.06	0.09	0.25…0.40	**LF4P03E**	1.550
– –	0.12 0.18	0.40…0.63	**LF4P04E**	1.550
0.09 0.12	0.25 –	0.63…1	**LF4P05E**	1.550
0.18 0.25	0.37 0.55	1…1.6	**LF4P06E**	1.600
0.37	0.75	1.6…2.5	**LF4P07E**	1.600
0.55 0.75	1.1 1.5	2.5…4	**LF4P08E**	1.600
1.1	2.2	4…6.3	**LF4P10E**	1.600
1.5 –	3 4	6…10	**LF4P14E**	1.600
2.2 3	5.5 –	9…14	**LF4P16E**	1.600

Variants (pre-assembled)

Description	For mounting on	Suffix to be added to the starter reference (3)
With HARTING connectors (4)	Insulated or metal enclosure	**A74**
With local/AS-Interface control	Insulated or metal enclosure	**A79**
With local/AS-Interface control and with HARTING connectors (4)	Insulated or metal enclosure	**A79A74**

(1) Avoid allowing the material to come into contact with strong bases (detergents, chlorine solvents, ketones, alcohol, aromatic hydrocarbons).
(2) Supplied without GV2 P motor circuit breaker.
*(3) Example: **LF3 P00EA79A74**.*
(4) Connectors to be fitted to cables (to be ordered separately, see page A1/69).

Dimensions:
A1/64 and A1/65

Schemes:
A1/66 and A1/67

TeSys enclosed starters
D.O.L. starters for AS-Interface cabling system

Starters for AS-interface bus

PB112225_L32R.eps



LF3 MP●●EU

PB112237_L30.eps



LF3 MP●●A79A7AU

PB112226_L30.eps



LF4 MP●●EU

PB112238_L32R.eps



LF4 MP●●A79A74

Characteristics

Conforming to standards		IEC 60204-1, IEC 60947-4-1, IEC 60439-1 UL 508, CSA C22-2 n° 14 (1)
Degree of protection	Conforming to IEC 60529	IP54
Ambient air temperature	Operation	-5 to +40 °C
Operating positions		Same as that of the contactors
Material		**LF● MP**: sheet steel

Starters in metal enclosures

Standard power ratings of 3-phase motors 50-60 Hz in category AC-3		Circuit breaker adjustment range of thermal trips	Starter with extended addressing	Weight
220/230 V	400/415 V			
kW	kW	A		kg
Non-reversing starters with rotary control knob, with black handle on blue background				
–	–	Without	**LF3MP00EU** (2)	3.620
–	0.06	0.16…0.25	**LF3MP02EU**	3.900
0.06	0.09	0.25…0.40	**LF3MP03EU**	3.900
– –	0.12 0.18	0.40…0.63	**LF3MP04EU**	3.900
0.09 0.12	0.25 –	0.63…1	**LF3MP05EU**	3.900
0.18 0.25	0.37 0.55	1…1.6	**LF3MP06EU**	3.950
0.37	0.75	1.6…2.5	**LF3MP07EU**	3.950
0.55 0.75	1.1 1.5	2.5…4	**LF3MP08EU**	3.950
1.1	2.2	4…6.3	**LF3MP10EU**	3.950
1.5 –	3 4	6…10	**LF3MP14EU**	3.950
2.2 3	5.5 –	9…14	**LF3MP16EU**	3.950
Reversing starters with rotary control knob, with black handle on blue background				
–	–	Without	**LF4MP00EU** (2)	3.620
–	0.06	0.16…0.25	**LF4MP02EU**	4.150
0.06	0.09	0.25…0.40	**LF4MP03EU**	4.150
– –	0.12 0.18	0.40…0.63	**LF4MP04EU**	4.150
0.09 0.12	0.25 –	0.63…1	**LF4MP05EU**	4.150
0.18 0.25	0.37 0.55	1…1.6	**LF4MP06EU**	4.200
0.37	0.75	1.6…2.5	**LF4MP07EU**	4.200
0.55 0.75	1.1 1.5	2.5…4	**LF4MP08EU**	4.200
1.1	2.2	4…6.3	**LF4MP10EU**	4.200
1.5 –	3 4	6…10	**LF4MP14EU**	4.200
2.2 3	5.5 –	9…14	**LF4MP16EU**	4.200

Variants (pre-assembled)

Description	For mounting on	Suffix to be added to the starter reference, before the letter U (3)
With HARTING connectors (4)	Insulated or metal enclosure	**A74**
With local/AS-Interface control	Insulated or metal enclosure	**A79**
With local/AS-Interface control and with HARTING connectors (4)	Insulated or metal enclosure	**A79A74**

*(1) Only for metal enclosures with letter **U** at the end of the reference.*
(2) Supplied without GV2 P motor circuit breaker.
*(3) Example: **LF3 MP00EA79A74U**.*
(4) Connectors to be fitted to cables (to be ordered separately, see page A1/69).

Dimensions:
A1/64 and A1/65

Schemes:
A1/66 and A1/67

TeSys enclosed starters
D.O.L. starters for AS-Interface cabling system

Starters for AS-interface bus

Insulated enclosures LF3 and LF4

Power extension (daisy-chaining)

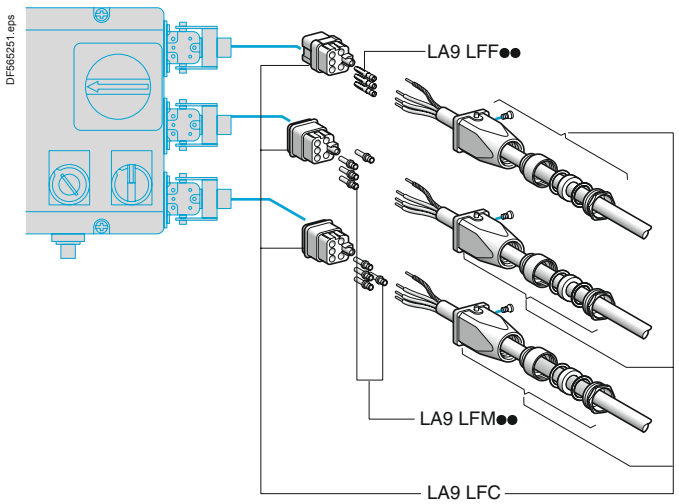

Terminal

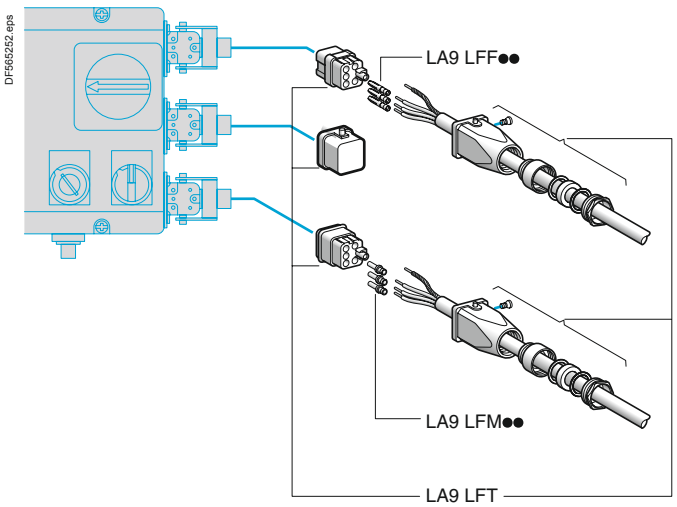

Metal enclosures LF3 and LF4

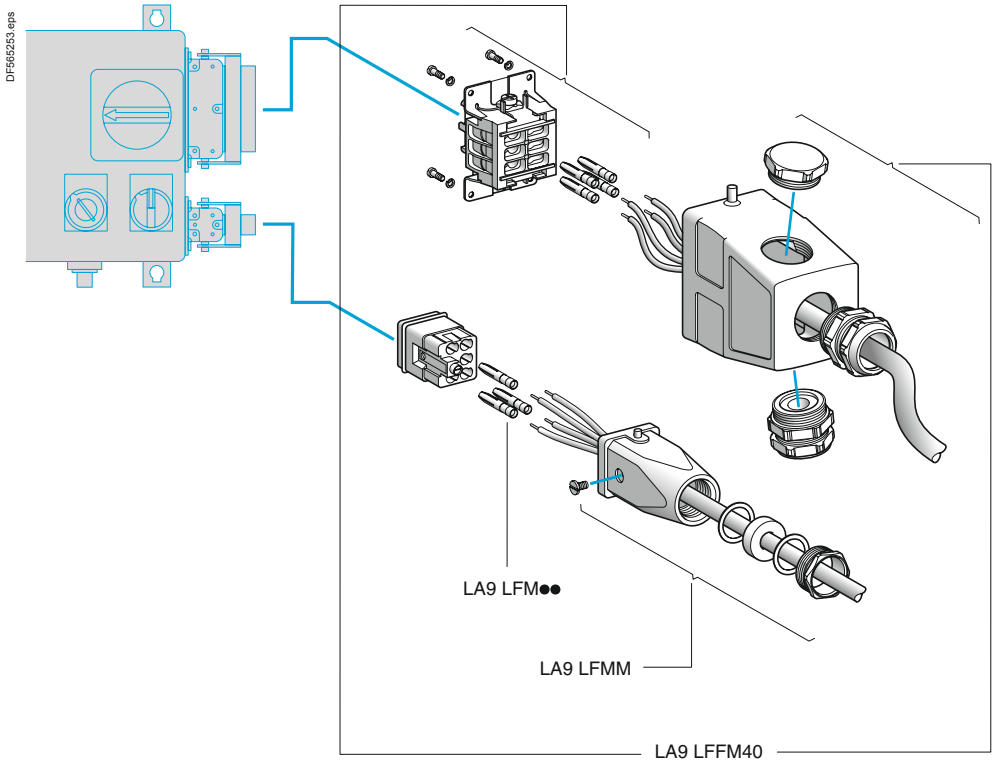

TeSys enclosed starters
D.O.L. starters for AS-Interface cabling system

Accessories for insulated enclosures with variant A74

In order to reduce setting-up times and to simplify maintenance, variant A74 LF starters are fitted with Harting plug-in connectors. These starters are designed to allow 2 types of connection topology.

Connection using tap links

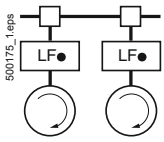

This configuration avoids having to switch off the power supply when replacing or adding one or more starters. Although machine availability is increased, a larger number of power connections is required: 4 per starter.

Connection using power extension (daisy-chaining)

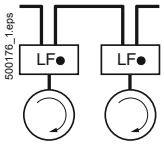

The number of power connections per starter is halved, but continuity of service is no longer assured if any of the "upstream" starters are disconnected or removed. With this type of installation, special precautions must be taken because removal of a starter at the head of the power supply line de-energises all the remaining starters on that line. For safety reasons therefore, starters must not be removed under load (prohibited by standard EN60204 above 3kW/400V).

The 2 connection kits and accessories shown below have been designed to facilitate setting up of power extension configurations by the user.

Connection kit (depending on enclosure application)

Enclosure application	Capacity	Kit contents	For mounting on	Reference	Weight
	mm²				kg
Power extension (daisy-chaining)	3-pole 1.5 or 2.5	1 female connector 2 male connectors and corresponding power sockets (1)	Enclosures LF3 and LF4	**LA9LFC**	0.150
Terminal	3-pole 1.5 or 2.5	1 female connector 1 male connector 1 blanking plug and corresponding power sockets (1)	Enclosures LF3 and LF4	**LA9LFT**	0.110

Crimping contacts

Type	Capacity mm²	Sold in lots of	Unit reference	Weight kg
Male	1.5	100	**LA9LFM15**	0.120
	2.5	100	**LA9LFM25**	0.120
Female	1.5	100	**LA9LFF15**	0.160
	2.5	100	**LA9LFF25**	0.150

Accessories for metal enclosures with variant A74

Connection kits

For connector	Kit contents	For mounting on	Reference	Weight
				kg
Input	1 metal cover 2 size 16 cable glands 1 blanking plug 1 female power socket (3P + earth) 4 female crimping contacts (2)	Metal enclosures LF3, LF4	**LA9LFFM40**	0.260
Output to motor	1 metal cover 1 size 16 cable gland 1 female power socket (3P+ earth) (1)	Metal enclosures LF3, LF4	**LA9LFMM**	0.060

Crimping contacts

Type	Capacity	Thermal current	Voltage	Sold in lots of	Unit reference	Weight
	mm²	A	V			kg
Male	1.5	10	400	100	**LA9LFM15**	0.120
	2.5	10	400	100	**LA9LFM25**	0.120

(1) Crimping contacts to be ordered separately.
(2) For flexible cable, 4 mm² maximum, Ith: 16 A, Us: 400 V.

Technical Data for Designers

Contents

Switch-disconnectors ..... A1/36 to A1/38
Direct-on-line starters ..... A1/39 to A1/47
Star-delta starters ..... A1/48 to A1/49
Starters for safety applications ..... A1/50 to A1/53
Starters for AS-interface bus ..... A1/54 to A1/69

TeSys enclosed starters
VARIO enclosed switch-disconnectors

Switch-disconnetors

Dimensions

VCFN 12GE to VCFN 40GE

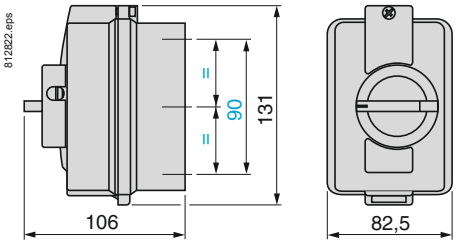

Cable glands: 2 x 16 P top and bottom.

VCF or VBF 02GE to 4GE
VCFX or VBFX GE1 to GE4

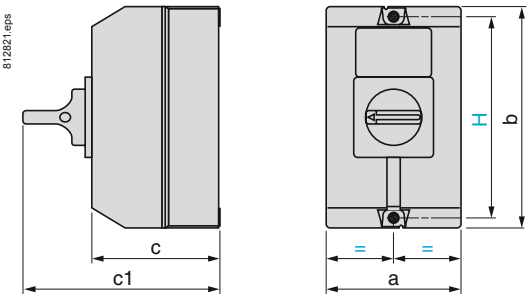

	a	b	c	c1	H
V●F 02GE to **V●F 2GE, V●FX GE1** (1)	90	146	85	131	130
V●F 3GE and **V●F 4GE** (2)	150	170	106	152	164
V●FX GE2 and **V●FX GE4** (2)	150	170	106	152	164

(1) Cable glands: 2 x 16 P top and bottom.
(2) Cable glands: 2 x 16/21/29 P top and bottom.

VCF or VBF 5GEN and 6GEN

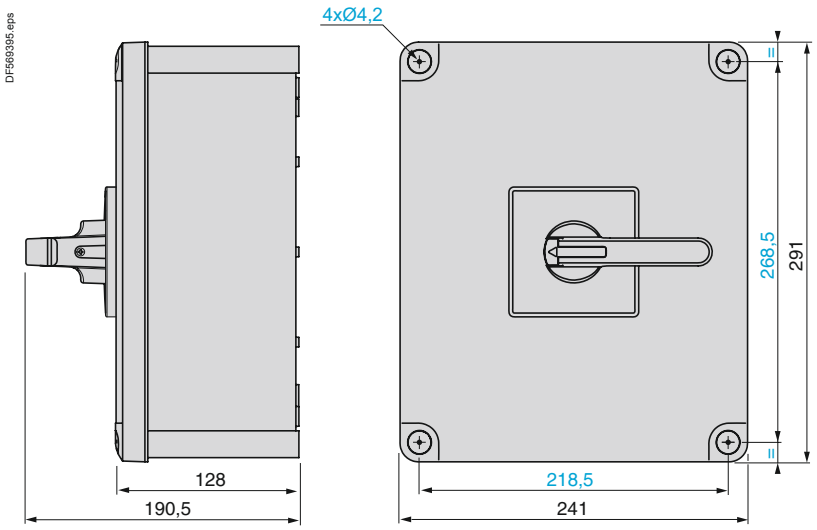

References:
A1/2 and A1/3

Schemes:
A1/37

TeSys enclosed starters
VARIO enclosed switch-disconnectors

Switch-disconnetors

Schemes

Switch-disconnectors

Enclosed or switch bodies	Main pole module	Neutral pole module
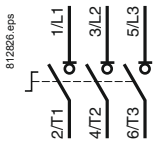		

Auxiliary contact blocks

VZ 7	VZ 20	VZN 05	VZN 06
			

References:
A1/2 and A1/3

Dimensions:
A1/36

TeSys enclosed starters

VARIO enclosed switch-disconnectors for the North American market, conforming to UL and CSA standards

Dimensions

VC1 GUN and VC2 GUN

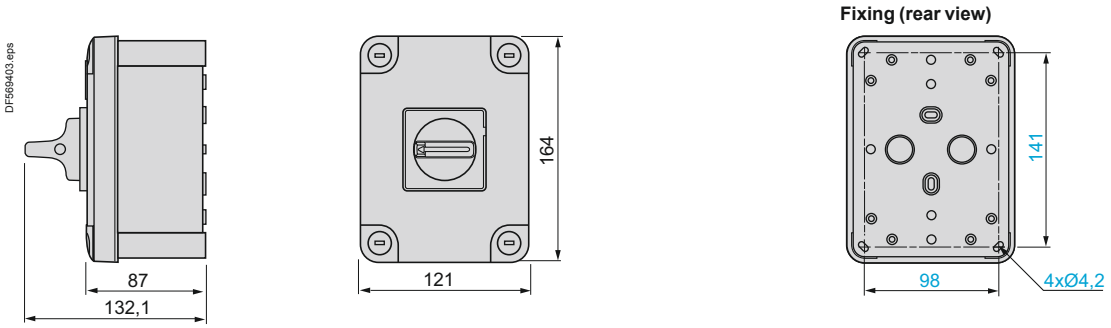

VC3 GUN and VC4 GUN

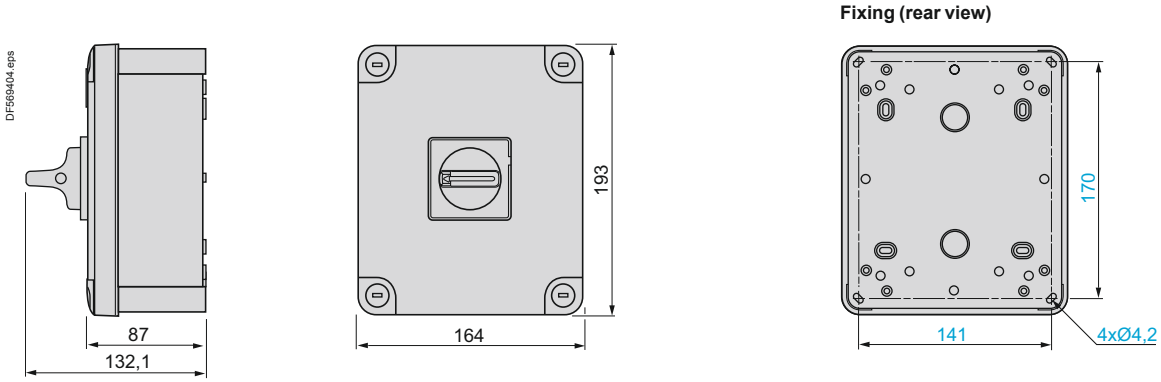

VC5 GUN and VC6 GUN

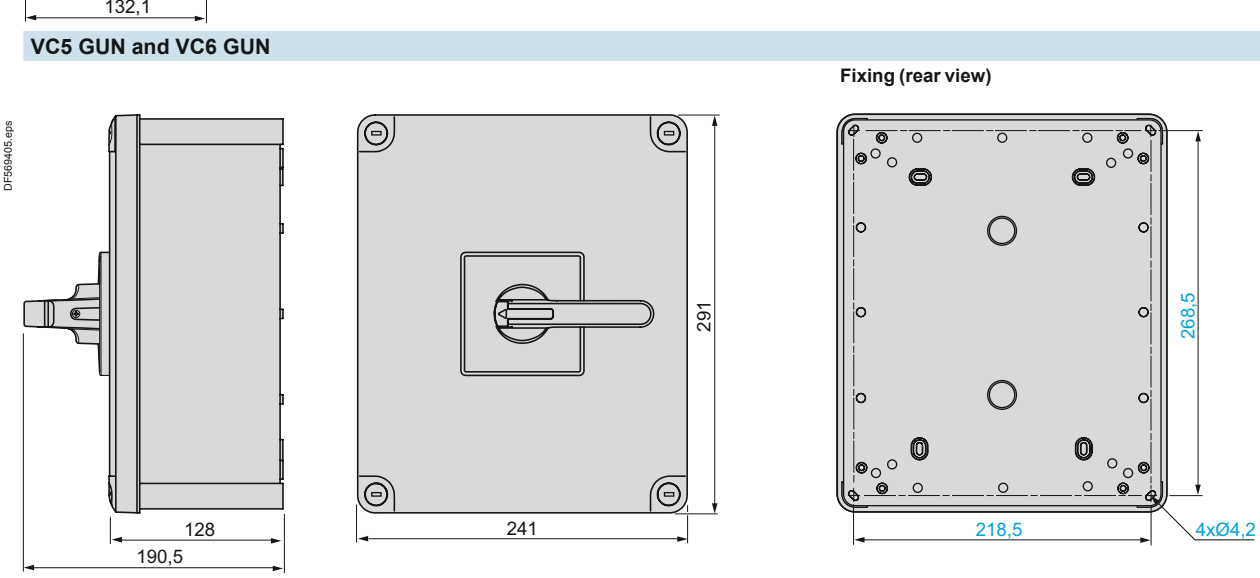

Schemes

Switch-disconnectors

Enclosed switch-disconnectors or switch bodies

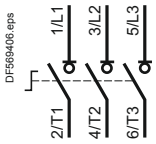

Main pole module



Neutral pole module



Auxiliary contact block modules

VZ 7



VZ 20



References:
A1/6

TeSys enclosed starters

D.O.L. starters, manual control, with GV2 ME thermal magnetic circuit breaker

Dimensions

Surface mounting enclosure GV2 MC0●

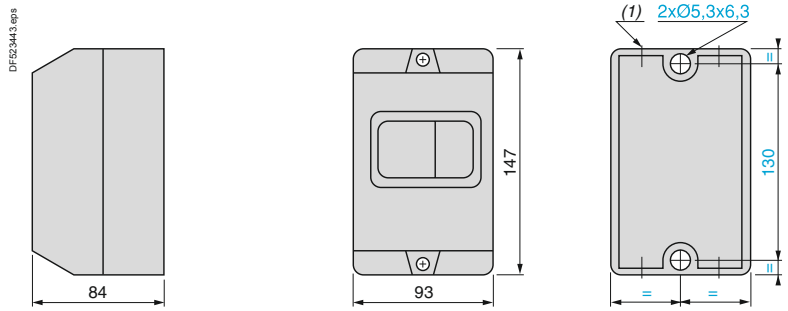

(1) Top face: 2 knock-outs for ISO20/25 cable glands or Pg16 or 16mm conduits.
Bottom face: 2 knock-outs for ISO20/25 cable glands or Pg16 or 16mm conduits.

Surface mounting enclosure GV2 MCK04

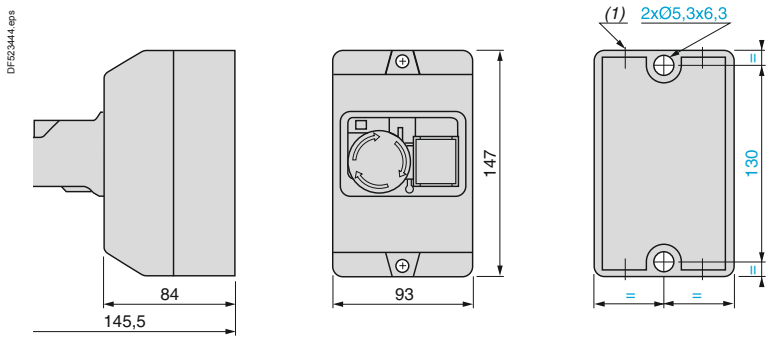

(1) Top face: 2 knock-outs for ISO20/25 cable glands or Pg16 or 16mm conduits.
Bottom face: 2 knock-outs for ISO20/25 cable glands or Pg16 or 16mm conduits.

Mounting

Flush mounting enclosures GV2 MP0● (panel cut-out)

GV2 MP0●

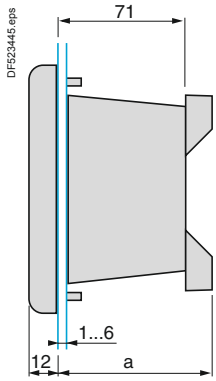

GV2 MP01, MP02

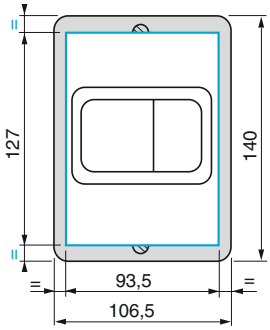

GV2 MP03, MP04

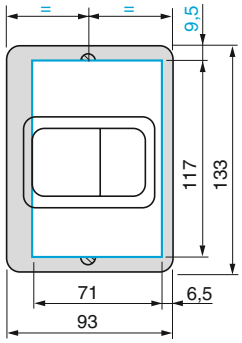

Front plate GV2 CP21

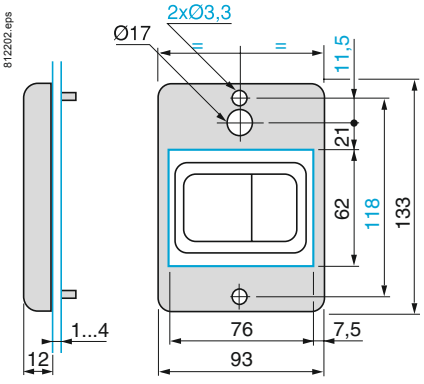

GV2	a
MP01, MP02	–
MP03, MP04	86

References: A1/7
Schemes: A1/40

TeSys enclosed starters

D.O.L. starters, manual control, with GV2 ME thermal magnetic circuit breaker

Schemes

GV2 ME●●

812203.eps

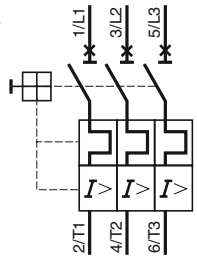

Instantaneous auxiliary contacts

GV AE1

812204.eps

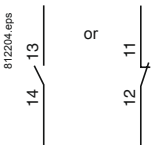

GV AE11

812205.eps

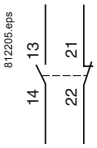

GV AE20

812206.eps

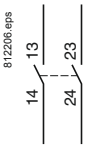

Instantaneous auxiliary contacts and fault signalling contacts

GV AD0110

812209.eps

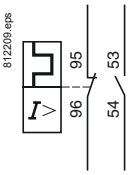

GV AD0101

812208.eps

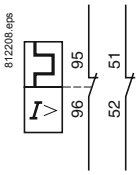

GV AD1010

812207.eps

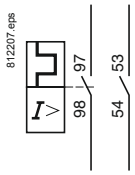

GV AD1001

812210.eps

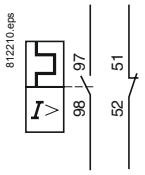

Instantaneous auxiliary contacts

GV AN11

812211.eps

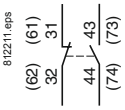

GV AN20

812212.eps

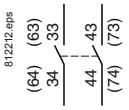

Short-circuit signalling contacts

GV AM11

812213.eps

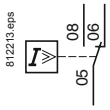

Undervoltage trips

GV AU●●●

812214.eps

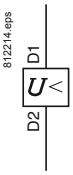

GV AS●●●

812215.eps

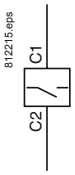

GV AX●●●

812216.eps

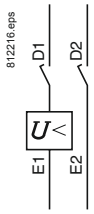

Wiring diagram for undervoltage trip used on potentially dangerous machines, conforming to INRS

812217.eps

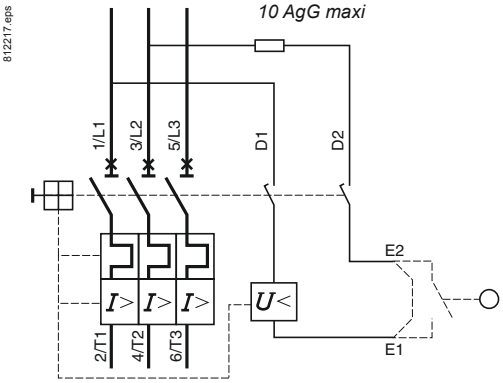

References:
A1/7

Dimensions:
A1/39

TeSys enclosed starters

D.O.L. starters manual control, with magnetic circuit breaker GV2 L, GV3 L or thermal-magnetic GV2 P, GV3 P

Dimensions

GV2 PC●●

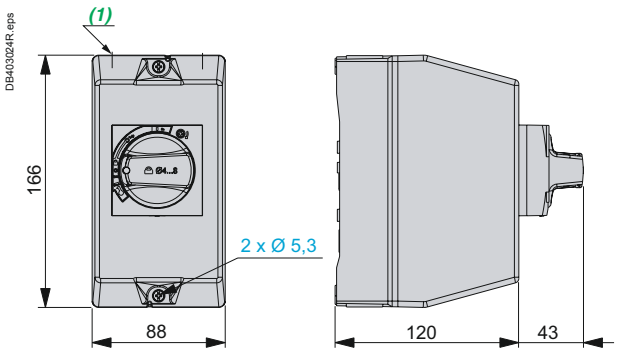

(1) Top face: 2 knock-outs for ISO20 cable glands.
Bottom face: 2 knock-outs for ISO20 cable glands.

GV3 PC●●

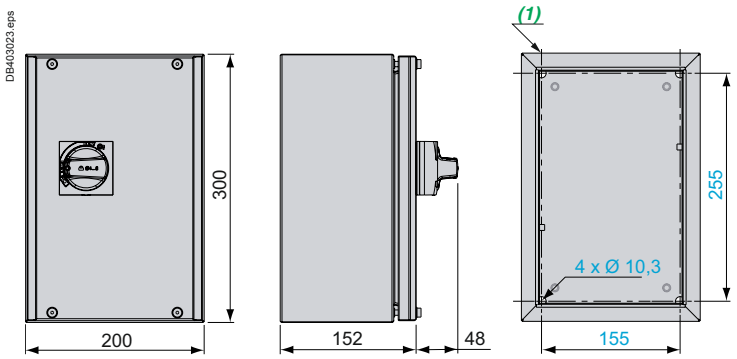

(1) Top face: 1 blanking plug for ISO32 cable gland.
Bottom face: 2 blanking plugs for ISO32 cable gland + 1 blanking plug for ISO20 cable gland.

Schemes

GV2 L

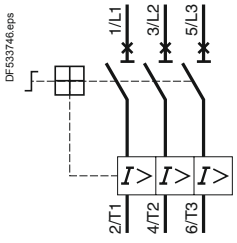

GV2 P

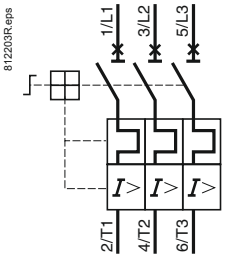

GV3 L

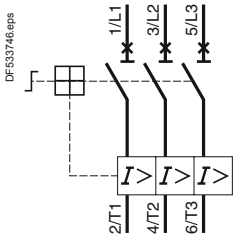

GV3 P

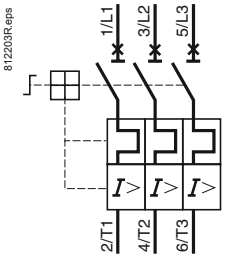

References:
A1/8 and A1/9

TeSys enclosed starters
D.O.L. starters
without isolating device

Direct-on-line

Dimensions

LE1 D09 and D12

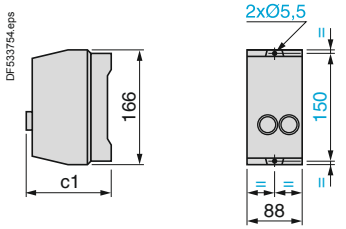

	c1
Standard version	128.5
Variant A04	120
Variant A05	128.5
Variant A09	120
Variant A13	120

LE1 D09●●T
LE1 D18…D35 and LE2 D09…D35

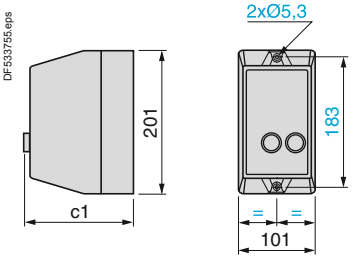

	c1	
	LE1 D	LE2 D
Standard version	153.5	160
Variant A04	145	145
Variant A05	153.5	153.5
Variant A09	160	–
Variant A13	160	–

LE1 D40A…D65A
LE2 D40A…D65A

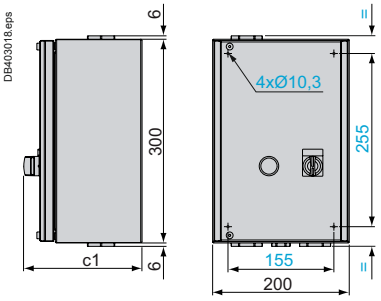

	c1	
	LE1 D	LE2 D
Standard version	158.5	174
Variant A04	150	150
Variant A05	158.5	158.5

LE2 K06 and K09

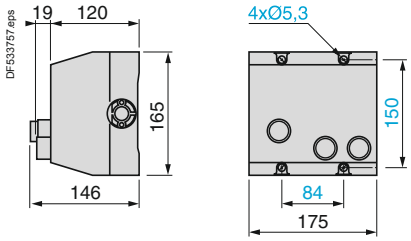

Knock-outs or blanking plugs for cable glands

Type of enclosure	At top		At bottom	
	PG	ISO	PG	ISO
LE1 D09 and D12	–	2 x 20	–	2 x 20
LE1 D18…D35 and LE2 D09…D35	–	2 x 20 or 2 x 25	–	2 x 20 or 2 x 25
LE1 and LE2 D40A…D65A	–	1 x 32	–	1 x 20 and 2 x 32
LE2 K06 and K09	2 x 13 and 2 x 16	4 x 20	2 x 13 and 2 x 16	4 x 20

References:
A1/10 and A1/11

Schemes:
A1/43

TeSys enclosed starters
D.O.L. starters
without isolating device

Direct-on-line

Schemes

LE1 D09…D65A

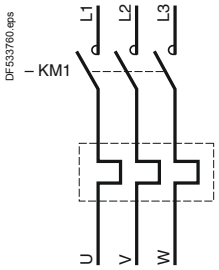

LE1 D09…D65A

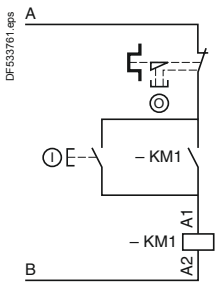

LE1 D09…D65A with variant A04 or A05

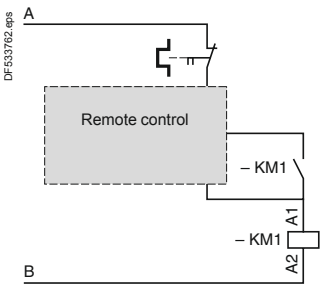

LE2 K06, K09

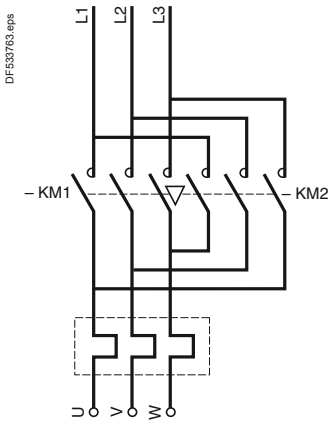

LE2 K06, K09

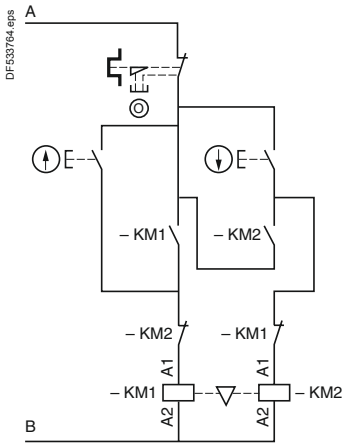

LE2 D09…D65A

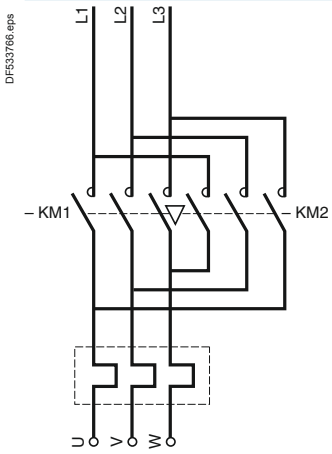

LE2 D09…D65A

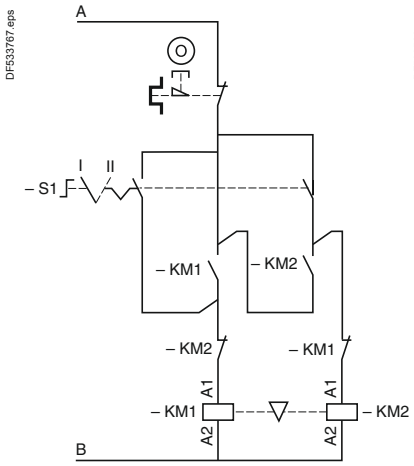

LE2 D40A…D65A with variants A04 or A05

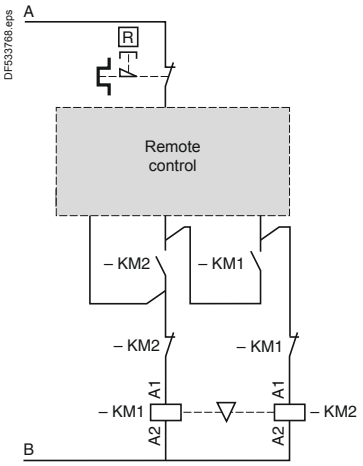

LE1 D09…D65A, LE2 D09…D65A Connections

Power voltage	Control circuit voltage	A	B
380 V, 400 V, 415 V, 440 V	220 V, 230 V, 240 V	L3	Neutral terminal
	380 V, 400 V, 415 V, 440 V	L3	L1
	Other voltages	Terminal 1	Terminal 2
Other voltages	Other voltages (600 V max)	For customer assembly	

LE2 K06, K09 Connections

Power voltage	Control circuit voltage	A	B
380 V, 400 V, 415 V	220 V, 230 V, 240 V	L3	Neutral
	380 V, 400 V, 415 V	L3	L1
Other voltages	Other voltages (440 V max)	For customer assembly	

References:
A1/10 and A1/11

Dimensions:
A1/42

TeSys enclosed starters
D.O.L. starters
with isolating device

Direct-on-line

Dimensions

LE4 K06 and K09, LE8 K06 and K09

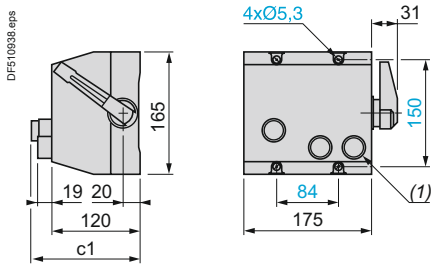

LE4 D09…D35, LE8 D09…D35

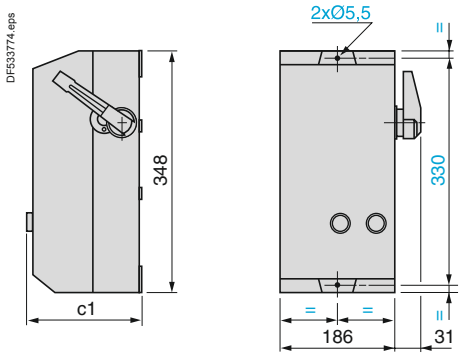

	c1	
	LE4 K	LE8 K
Standard version	146	146
Variant A05	–	139

(1) For LE8 only.

	c1	
	LE4 D	LE8 D
Standard version	175.5	182
Variant A04	167	167
Variant A05	175.5	175.5

Knock-outs or blanking plugs for cable glands

Type of enclosure	At top		At bottom	
	PG	ISO	PG	ISO
LE4 and LE8 D09…D35	–	2 x 20 or 2 x 25 or 2 x 32 or 2 x 40	–	2 x 20 or 2 x 25 or 2 x 32 or 2 x 40
LE4 and LE8 K06 and K09	2 x 13 and 2 x 16	4 x 20	2 x 13 and 2 x 16	4 x 20

References:
A1/14 and A1/15

Schemes:
A1/45

TeSys enclosed starters
D.O.L. starters
with isolating device

Direct-on-line

Schemes

LE4 K06, K09
LE4 D09…D35

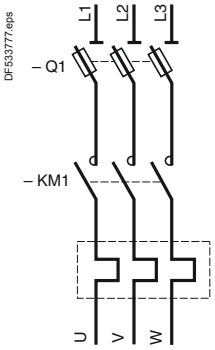

LE4 K06, K09

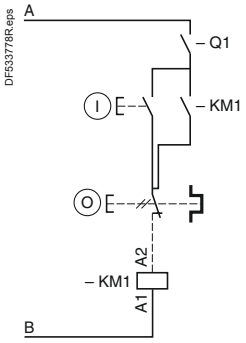

LE4 D09…D35

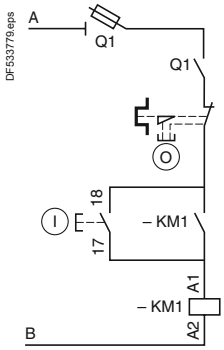

LE4 D09…D35 with variant A04 or A05

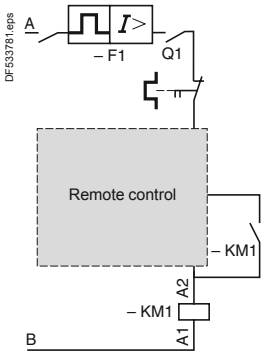

LE8 K06, K09
LE8 D09…D35

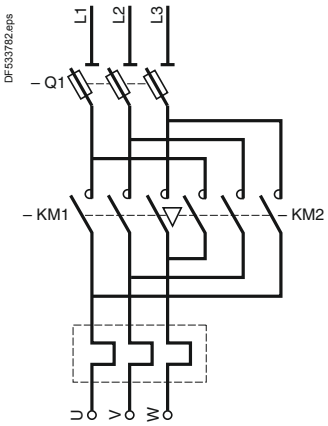

LE8 K06, K09

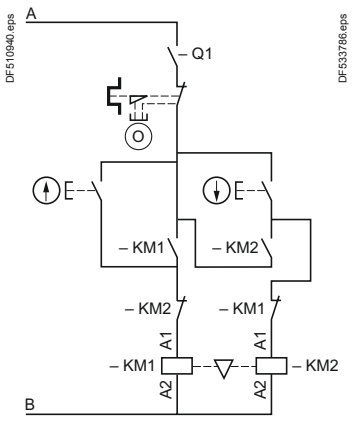

LE8 D09...D35

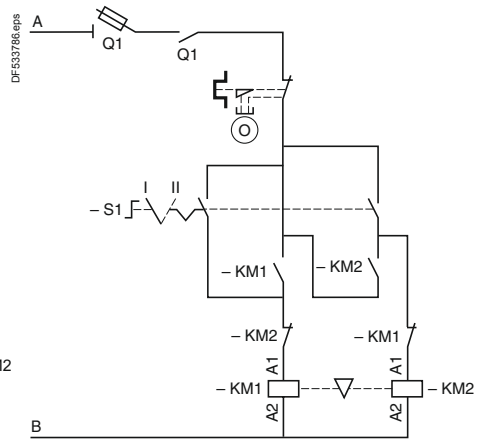

LE4 D09 and D12, LE8 D09 and D12 Connections			
Power voltage	**Control circuit voltage**	**A**	**B**
380 V, 400 V, 415 V, 440 V	220 V, 230 V, 240 V	L3	Neutral
	380 V, 400 V, 415 V, 440 V	L3	L1
	Other voltages	Terminal 1	Terminal 2
Other voltages	Other voltages (600 V max)	For customer assembly	

LE4 D18…D35, LE8 D18…D35 Connections			
Power voltage	**Control circuit voltage**	**A**	**B**
380 V, 400 V, 415 V, 440 V	220 V, 230 V, 240 V	L3	Neutral terminal
	380 V, 400 V, 415 V, 440 V	L3	L1
	Other voltages	Terminal 1	Terminal 2
Other voltages	Other voltages (600 V max)	For customer assembly	

LE4 K06, K09, LE8 K06, K09 Connections			
Power voltage	**Control circuit voltage**	**A**	**B**
380 V, 400 V, 415 V	220 V, 230 V, 240 V	L3	Neutral
	380 V, 400 V, 415 V	L3	L1
Other voltages	Other voltages (440 V max)	For customer assembly	

References:
A1/14 and A1/15

Dimensions:
A1/44

TeSys enclosed starters

D.O.L. starters

with 3-phase thermal overload relay
with 3 protected phases

Dimensions

LE1 M35 (1)

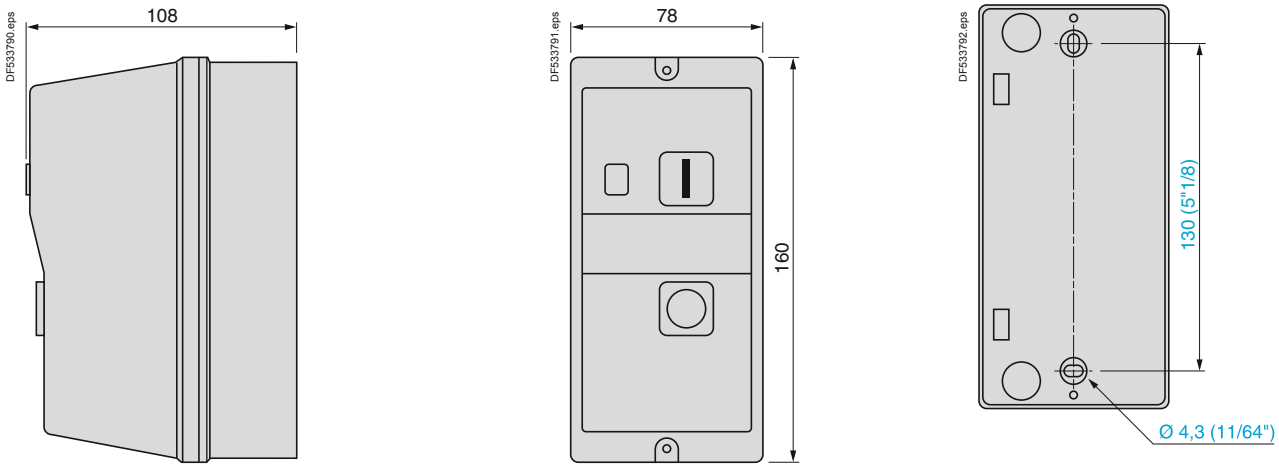

Knock-outs or blanking plugs for cable glands

Enclosure type	At top		At bottom	
	PG	ISO	PG	ISO
LE1 M	2 x 13 to 2 x 21	2 x 20 or 2 x 25	2 x 13 to 2 x 21	2 x 20 or 2 x 25

(1) Can be mounted on machine panel or frame. Knock-outs for 4 x 13 P cable glands.

Schemes

LE1 M35

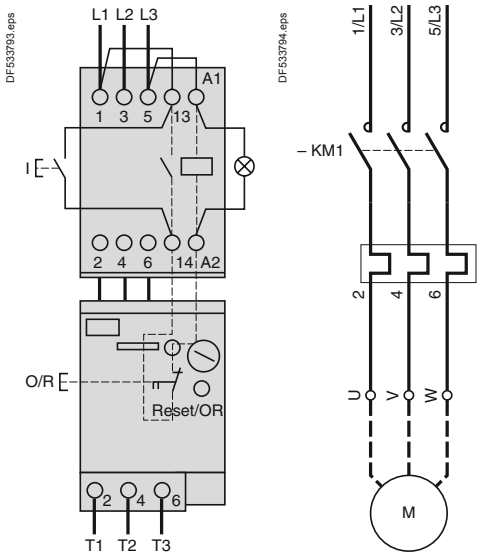

Choice of type of control built into the product

Control by latching pushbuttons

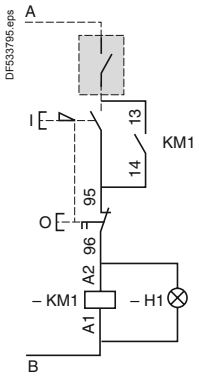

Control by spring return pushbuttons

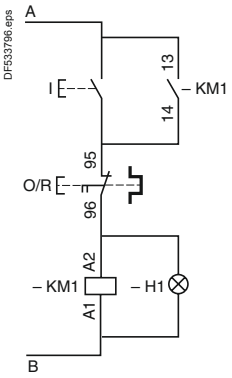

Connections

Power voltage	Control circuit voltage	A	B
380 V, 400 V, 415 V, 440 V	220 V, 230 V, 240 V	L3	Neutral
	380 V, 400 V, 415 V, 440 V	L3	L1
	Other voltages	For customer assembly	
Other voltages	All voltages (440 V max)	For customer assembly	

References:
A1/12

TeSys enclosed starters

D.O.L. starters

with thermal magnetic circuit breaker and contactor

Dimensions

LE1 GVMEK

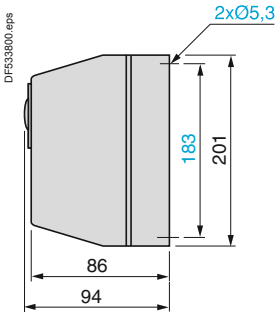

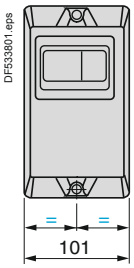

Knock-outs or blanking plugs for cable glands		
Enclosure type	**At top**	**At bottom**
	ISO	**ISO**
LE1 GV	2 x 20 or 2 x 25	2 x 20 or 2 x 25

Schemes

LE1 GVMEK

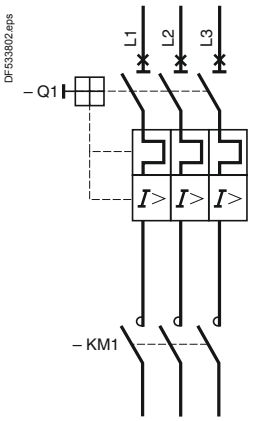

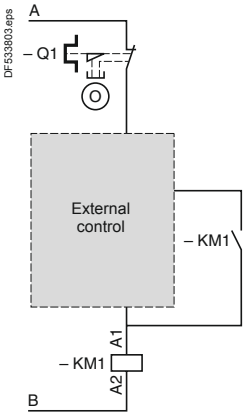

Connections			
Power voltage	**Control circuit voltage**	**A**	**B**
380 V, 400 V, 415 V, 440 V	220 V, 230 V, 240 V	L3	Neutral
	380 V, 400 V, 415 V, 440 V	L3	L1
	Other voltages	For customer assembly	
Other voltages	All voltages (440 V max)	For customer assembly	

References:
A1/13

TeSys enclosed starters
Star-delta starters
without isolating device

Star-delta

Dimensions

LE3 D09…D35

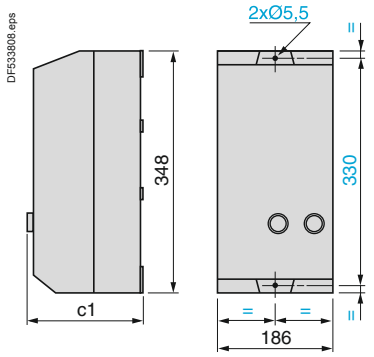

	c1
Standard version	175.5
Variant A04	167
Variant A05	175.5

Knock-outs or blanking plugs for cable glands

Type of enclosure	At top		At bottom	
	PG	ISO	PG	ISO
LE3 D09…D35	–	2 x 20 or 2 x 25 or 2 x 32 or 2 x 40	–	2 x 20 or 2 x 25 or 2 x 32 or 2 x 40

Schemes

LE3 D09…D35

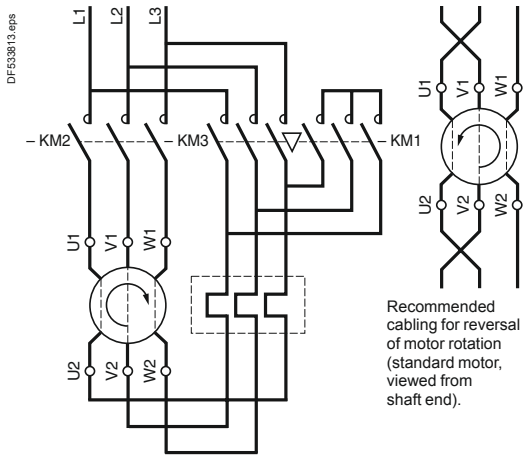

LE3 D09…D35

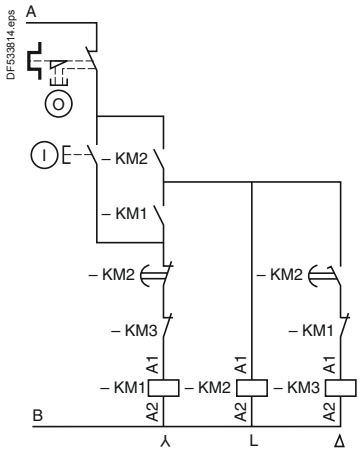

Note: in accordance with current installation regulations, short-circuit protection must be provided by fuses or a circuit breaker.

Connections

Power voltage	Control circuit voltage	A	B
380 V, 400 V, 415 V, 440 V	220 V, 230 V, 240 V	L3	Neutral terminal
	380 V, 400 V, 415 V, 440 V	L3	L1
	Other voltages	Terminal 1	Terminal 2
Other voltages	All voltages (600 V max)	For customer assembly	

References:
A1/16 and A1/17

TeSys enclosed starters
Star-delta starters
with isolating device

Star-delta

Dimensions
LE6 D09…D18

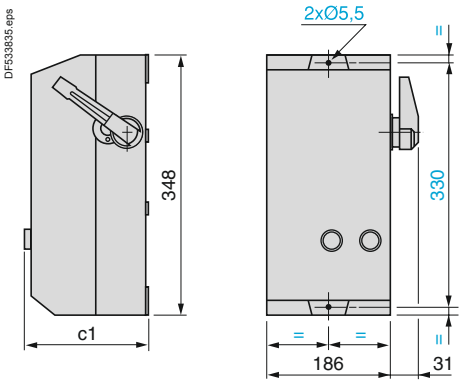

	c1
Standard version	175.5
Variant A04	167
Variant A05	175.5

Knock-outs or blanking plugs for cable glands

Type of enclosure	At top		At bottom	
	PG	ISO	PG	ISO
LE6 D09…D18	–	2 x 20 or 2 x 25 or 2 x 32 or 2 x 40	–	2 x 20 or 2 x 25 or 2 x 32 or 2 x 40

Schemes
LE6 D09…D18

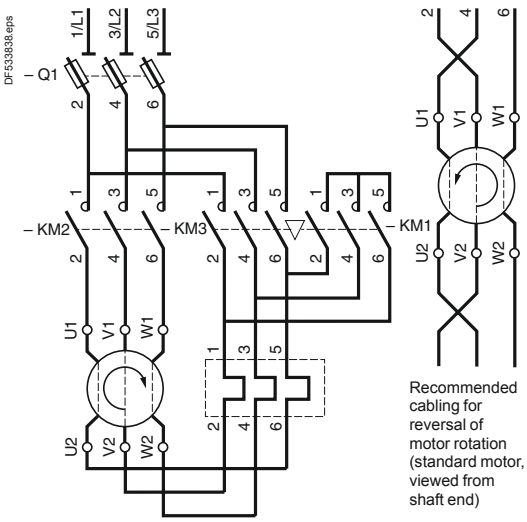

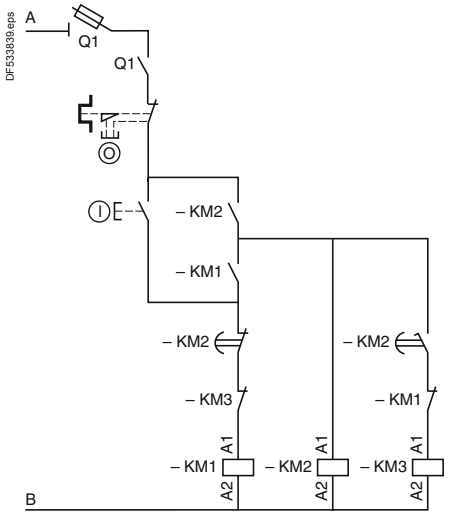

Connections

Power voltage	Control circuit voltage	A	B
380 V, 400 V, 415 V, 440 V	220 V, 230 V, 240 V	L3	Neutral terminal
	380 V, 400 V, 415 V, 440 V	L3	L1
	Other voltages	Terminal 1	Terminal 2
Other voltages	All voltages (600 V max)	For customer assembly	

References:
A1/18

TeSys enclosed starters

Safety starters

Conforming to standards: IEC 60204-1 "Safety of machinery - Electrical equipment of machines"

Dimensions

LG1 K06, K09
LG1 D12, D18

DF533971.eps

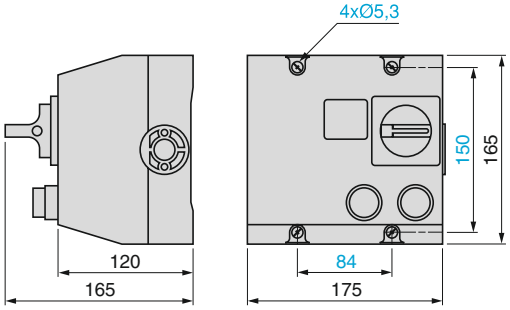

LG7 K06, K09, D12, D18
LG8 K06, K09, K12

DF533972.eps

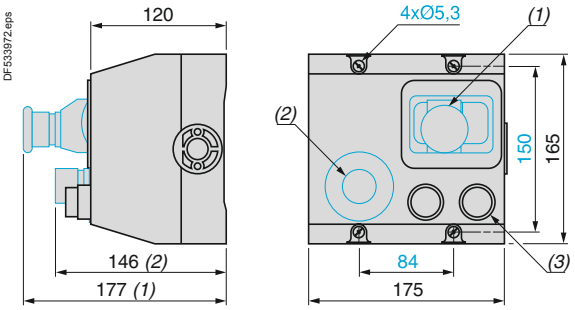

(1) Emergency Stop for starters LG● K06.
(2) Emergency Stop for starters LG● K09, K12, D12 et D18.
(3) Only for LG7.

Knock-outs or blanking plugs for cable glands

Type of enclosure	At top	At bottom
LG1 K and LG1 D	2 x 13 P and 2 x 16 P	2 x 13 P and 2 x 16 P
LG7 K and LG7 D	2 x 13 P and 2 x 16 P	2 x 13 P and 2 x 16 P
LG8 K	2 x 13 P and 2 x 16 P	2 x 13 P and 2 x 16 P

References:
A1/22 to A1/25

Schemes:
A1/51

TeSys enclosed starters

Safety starters

Conforming to standards: IEC 60204-1 "Safety of machinery - Electrical equipment of machines"

For safety applications

Schemes

LG1 K06, K09, D12, D18

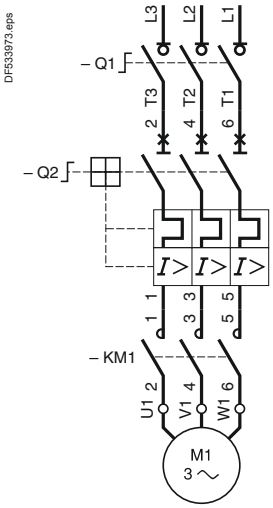

LG1 K06, K09, D12, D18

380/400 V, code Q7 or 400/415 V, code N7

220/230 V, code M7

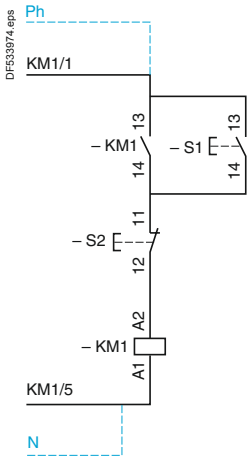

LG7 K06

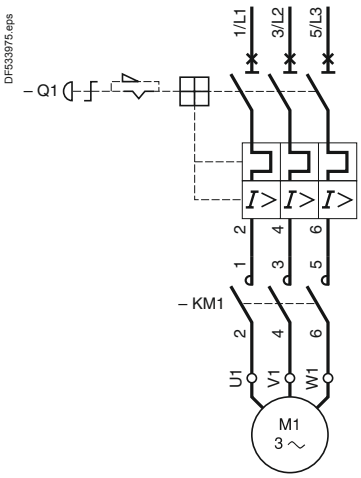

LG7 K09, D12, D18

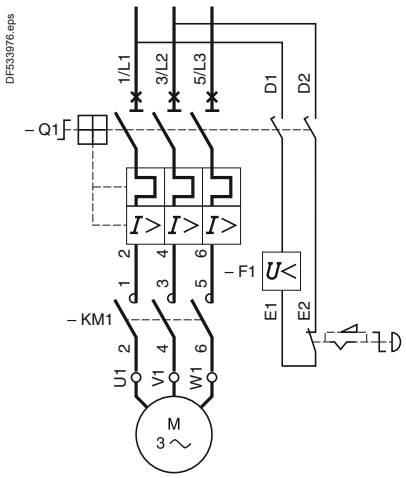

LG7 K06, K09, D12, D18

380/400 V, code Q7 or 400/415 V, code N7

220/230 V, code M7

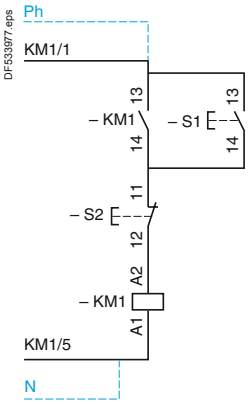

LG8 K06

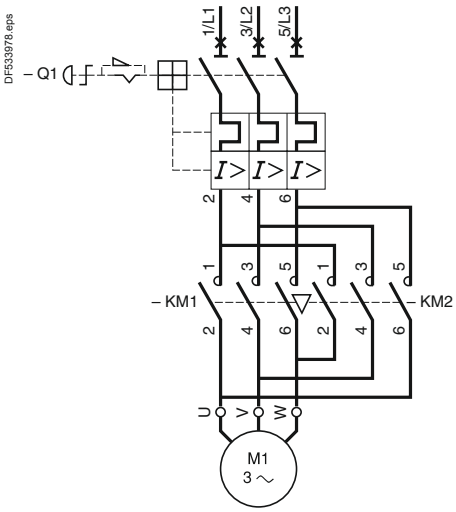

LG8 K09, K12

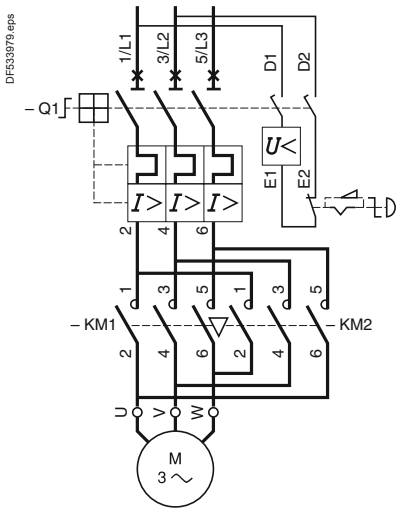

LG8 K06, K09, K12

380/400 V, code Q7 or 400/415 V, code N7

220/230 V, code M7

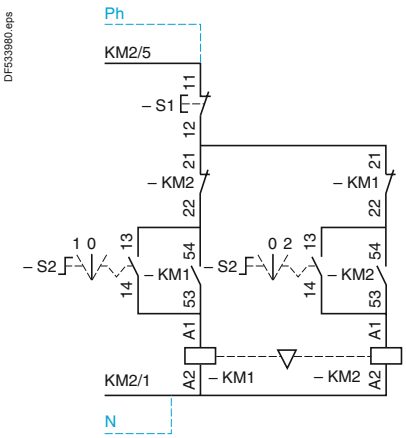

References:
A1/22 to A1/25

Dimensions:
A1/50

TeSys enclosed starters

Safety starters
Conforming to standards: IEC 60204-1
"Safety of machinery - Electrical equipment of machines"

For safety applications

Dimensions

LJ7 K06, LJ8 K06

DF533994.eps

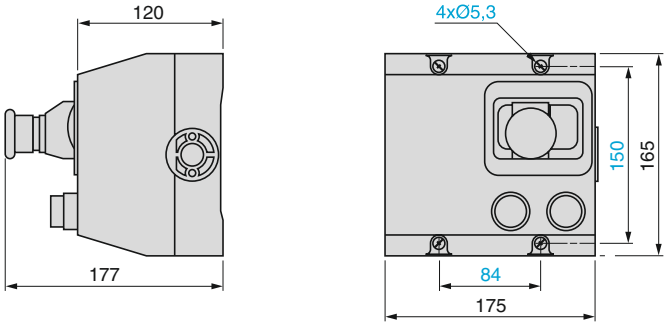

LJ7 K09, LJ8 K09

DF533995.eps

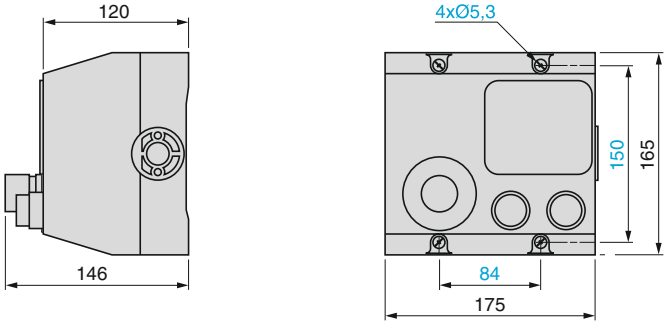

Cut-outs or blanking plugs for cable glands at the top and at the bottom 2 x 13 P and 2 x 16 P.

References:
A1/26 and A1/27

Schemes:
A1/53

TeSys enclosed starters

Safety starters

Conforming to standards: IEC 60204-1 "Safety of machinery - Electrical equipment of machines"

For safety applications

Schemes

LJ7 K06

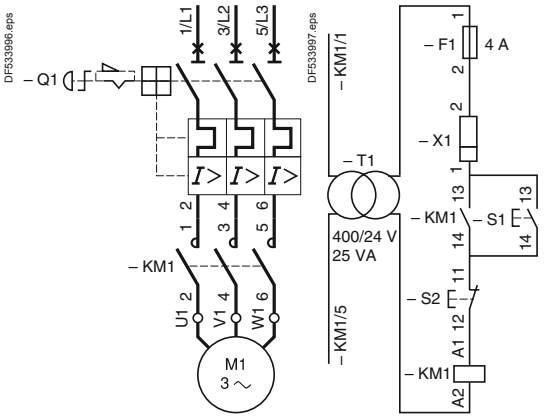

LJ7 K09

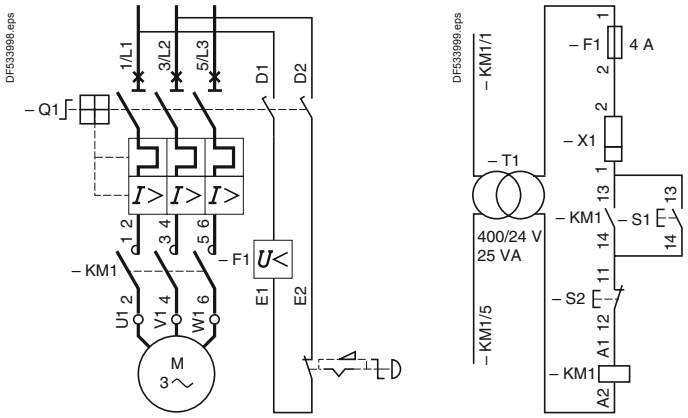

LJ8 K06

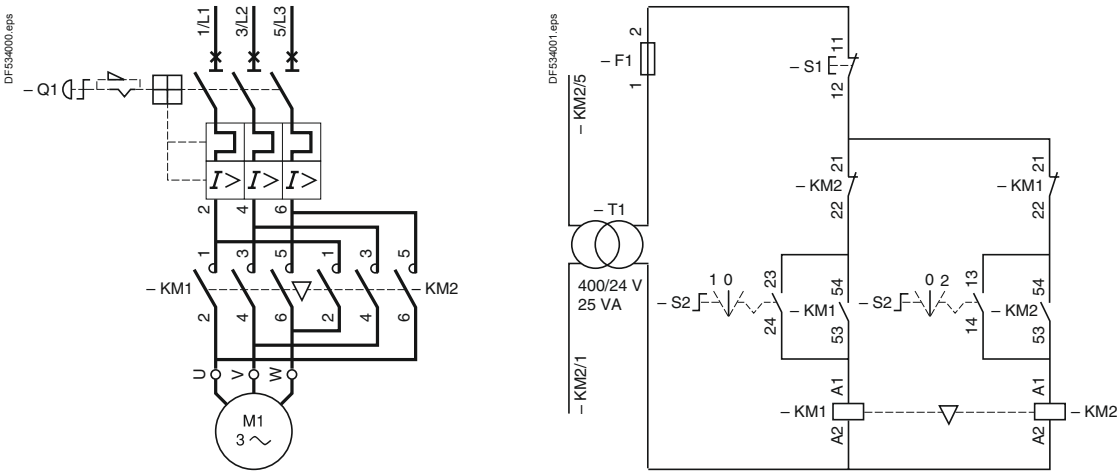

LJ8 K09

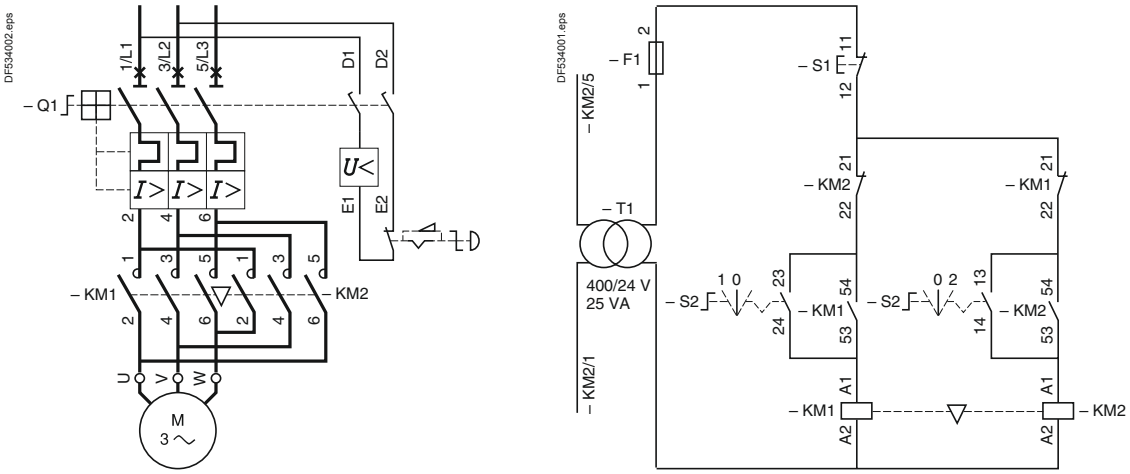

References:
A1/26 and A1/27

Dimensions:
A1/52

TeSys enclosed starters
D.O.L. starters for AS-Interface cabling system

Presentation

Decentralised control of motors using enclosed starters which communicate on AS-Interface, drastically reduces setting-up times, thereby increasing the availability of machines.

In order to cater for different environments, these starters are sub-divided according to:
- the different power connection methods: cable gland or Harting plug-in connectors,
- the local/AS-Interface remote operating modes,
- the type of enclosure: insulated (plastic) or metal.

Decentralisation of machine starters

These enclosed starters which communicate on AS-Interface are pre-assembled and ready-to-use with a minimum of cabling.
They are designed for building decentralised electrical installations:
i.e. the starters are installed as near as possible to the motors they are to control.
The decentralisation of the starters provides obvious advantages regarding power distribution to machines not grouped together, for example: motors driving a conveyor system.

Traditional installation

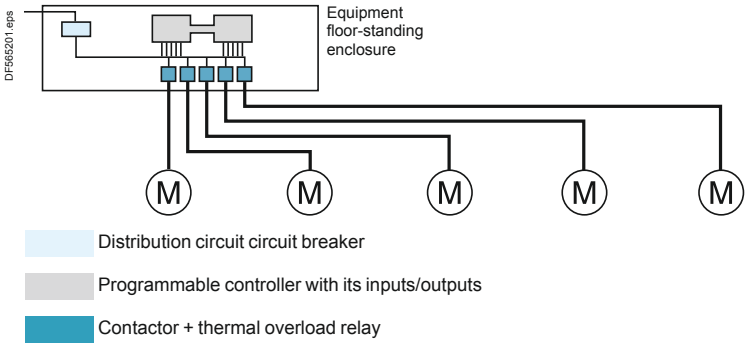

Decentralised installation

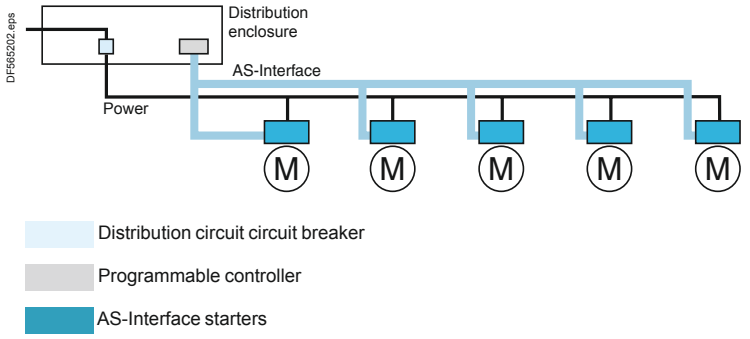

Power is distributed either by prefabricated trunking or by cable.
These starters incorporate all the functions necessary for the management of motors (control, protection, isolation, etc.), and comprise:
- a thermal-magnetic circuit breaker,
- a low consumption contactor (non reversing) or contactor pair (reversing),
- an I/O module ASI 20MT●●.

Designed primarily for use with 3-phase a.c. motors, they can nevertheless be used with single-phase or d.c. motors. In these applications, the 3 phases of the internal circuit breaker should be wired in series (each phase sensing the same current) in order to avoid tripping due to an assumed phase failure.

TeSys enclosed starters
D.O.L. starters for AS-Interface cabling system

Starters for AS-interface bus

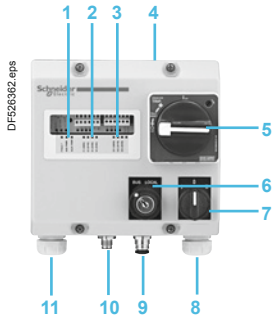

Connection by cable gland

1 Product diagnostics via 3 LEDs.
2 Input state.
3 Output state.
4 Knock-out for cable gland (not included for any power extension or output control relay cabling).
5 Disconnect rotary control knob.
Indicates “Trip” when switch-disconnector tripped.
6 Local/AS-Interface key switch (variant A79).
7 For variant A79: 3-position, spring return to zero selector switch for reversing starter (LF4). Function:
- position 1 = forward running,
- position 0 = Stop,
- position 2 = reverse running.
Pushbutton for non-reversing starter (LF3).
Function: Pulsed operation.
8 Cable gland for power supply cable.
9 M12 female connector for cable connection to a sensor (supplied with protective cap).
10 M12 male connector for connection to AS-Interface (1) and auxiliary supply.
11 Cable gland for motor cabling.

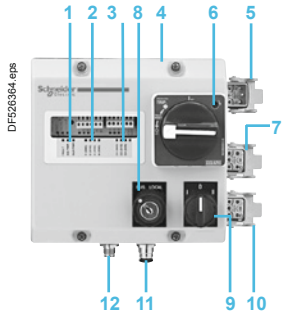

1 Product diagnostics via 3 LEDs.
2 Input state.
3 Output state.
4 Knock-out for cable gland (not included for output control relay cabling).
5 Male connector for incoming power supply to motor starter (2).
6 Disconnect rotary control knob.
Indicates “Trip” when switch-disconnector tripped.
7 Female connector for power supply to the next motor starter (2).
8 Local/AS-Interface key switch.
9 For variant A79: 3-position, spring return to zero selector switch for reversing starter (LF4). Function:
- position 1 = forward running,
- position 0 = Stop,
- position 2 = reverse running.
Pushbutton: for non-reversing starters (LF3).
Function: Pulsed operation.
10 Female connector for power supply to motor (2).
11 M12 female connector for cable connection to a sensor (supplied with protective cap).
12 M12 male connector for connection to AS-Interface (1) and auxiliary supply.

(1) Extension cables: please consult your Regional Sales Office.
(2) HARTING plug-in connector to be fitted to cable (not included, see page A1-51).

TeSys enclosed starters
D.O.L. starters for AS-Interface cabling system

Starters for AS-interface bus



Auxiliary supply

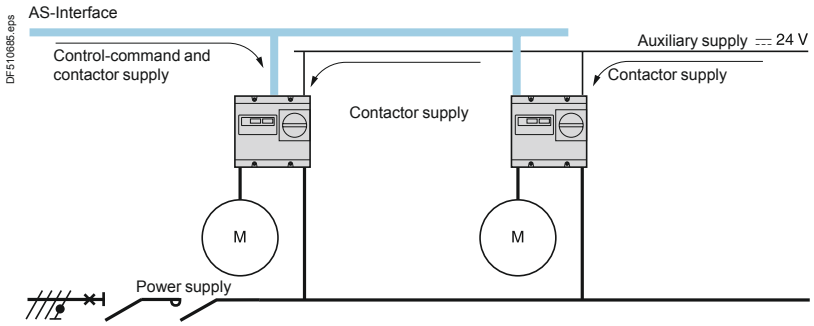

A ⎓ 24 V supply is necessary for LF3 and LF4 starters.

Prospective current consumptions are listed on page page A1-52.

Motor command-control

The functions provided by this range of starters are:
- motor control and status monitoring via AS-Interface,
- D.O.L. starting (non-reversing or reversing),
- overload protection of the motor,
- short-circuit protection of the motor and its power supply cabling.
- load break switch-disconnector with padlockable control knob,
- IP 54 degree of protection, double insulation.

Opening of the enclosure is mechanically inhibited whilst the starter is switched on or whilst in the off position and padlocked.

The rotary control knob has 3 positions:
0: switch-disconnector opened manually,
I: switch-disconnector closed,
Trip: switch-disconnector tripped.

TeSys enclosed starters
D.O.L. starters for AS-Interface cabling system



Local control

Stop and reset functions are possible from the front of the enclosure.

The stop command is achieved by actuating the internal circuit breaker, which provides the switch-disconnector function.
Stopping is controlled by a rotary control knob.

In the event of an overload, resetting of the internal thermal-magnetic circuit breaker is possible after the motor has cooled down.
Resetting is controlled by a rotary control knob.

This starter variant is fitted with a 2-position “local/AS-Interface” switch which, depending on the position of the switch, allows the following functions:

■ AS-Interface: the PLC controls the motor starter.

■ Local: local Start/Stop commands override instructions from the PLC.

■ 3-position, spring return to zero selector switch for reversing starter (LF4).
Function:
- position 1 = forward running,
- position 0 = Stop,
- position 2 = reverse running.

■ Pushbutton for non-reversing starter (LF3) .
Function:
- Pulsed operation.

Control via a control station

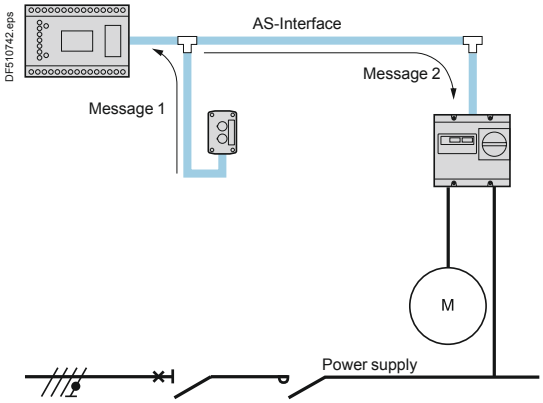

It is possible to achieve manual local start control from pushbutton control stations connected to AS-Interface. Please consult your Regional Sales Office.

Actuation of a pushbutton is transmitted to the programmable controller (message 1) which passes it on to the starter (message 2).

Local signalling

Indication of all the operating states (diagnostic, inputs and outputs) is visible without having to open the enclosure (transparent window in the enclosure cover).

Safety

The starter features continual self-checking to ensure correct operation.

External safety functions are not processed by the starter.

Emergency stop and machine safety wiring must follow standard safety practice and be hard-wired, using electromechanical devices in the approved way.
These functions must not be handled by communication bus systems (EN 60204 §9.2.5.4).

Protection against unexpected restarting, after an accidental power supply failure, must be provided by a safety device separate from the starter.

The starter control (rotary knob) does not provide the Emergency Stop function if the machine is fitted with other actuators. The control operators on the starter are therefore coloured black, in accordance with standard EN 60204 §10.2.1.
Starters with rotary control knob may be padlocked in the ON position, since this control does not provide an Emergency Stop function.

Assume fallback condition

When communication is interrupted, the starter is no longer controlled by the PLC. The fallback condition of the starter is “motor stopped” (outputs at 0).

Output control relay

This relay incorporates a C/O contact, which may be used to control an indicator lamp, solenoid valve, etc. (250 V, 5 A), via AS-Interface.

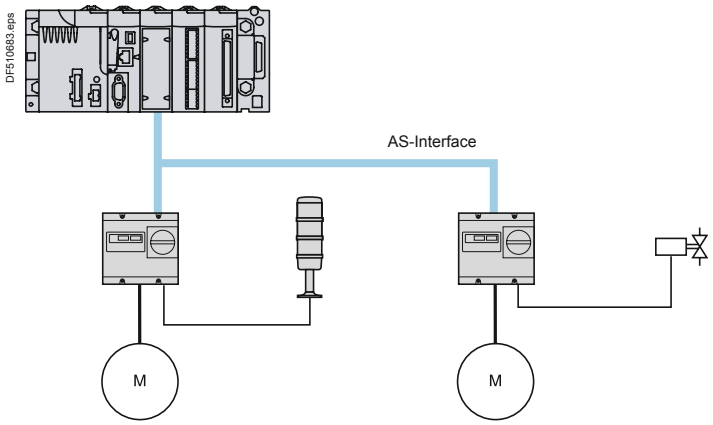

TeSys enclosed starters
D.O.L. starters for AS-Interface cabling system

Starters with sensors connected (1)

Two 3-wire PNP sensors (50 mA max) or 2-wire limit switches can be connected directly to the starter.

The information supplied by the sensor/limit switch is fed back via the AS-Interface line.

(1) For "Reflex Stop" function, please consult your Regional Sales Office.

TeSys enclosed starters
D.O.L. starters for AS-Interface cabling system

Starters for AS-interface bus

Environment

Starter type			LF3, LF4
Conforming to standards			IEC 60204-1, EN 60204-1, IEC 60439-1, IEC 60947-4-1, EN 60947-4-1 UL 508, CSA C22-2 n° 14 (1)
Product certifications			–
Protective treatment	Standard version		"TC"
Degree of protection conforming to IEC 60529			IP54
Ambient air temperature around the device conforming to IEC 60439-1	Storage	°C	-40…+80
	Operation	°C	-5…+40
Maximum operating altitude	Without derating	m	2000
Operating position without derating	In relation to normal vertical mounting plane		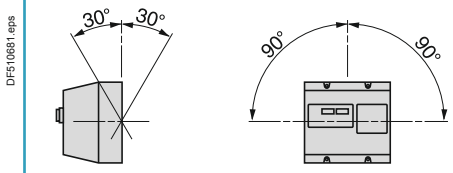
Flame resistance of equipment	Conforming to IEC 60695-2-1	°C	960
Shock resistance (1/2 sine wave, 11ms) conforming to IEC 60068-2-27	Contactor open		10 gn
	Contactor closed		15 gn
Vibration resistance 5…150 Hz conforming to IEC 60068-2-6	Contactor open		2 gn
	Contactor closed		4 gn
Safe separation of circuits	Conforming to VDE 0106 and IEC 60536		SELV (Safety Extra Low Voltage), up to 400 V
Immunity to non-dissipating shock wave (Uimp)	Conforming to IEC 60947-1	kV	6: power 2.5: AS-Interface, 24 V and sensor
Material and colour of enclosure base	Insulated enclosures		Polycarbonate impregnated with 20 % glass fibre, black throughout
	Metal enclosures		Sheet steel RAL 9001
Material and colour of enclosure cover	Insulated enclosures		Polycarbonate impregnated with 20 % glass fibre, RAL 9001 throughout
	Metal enclosures		Sheet steel RAL 9001
Resistance to chemical agents	Insulated enclosures		Avoid allowing this material to come into contact with: strong bases (certain detergents), aromatic hydrocarbons, alcohol, chlorine solvents, ketones.

Electromagnetic compatibility

Immunity to electrostatic discharge	Conforming to IEC 61000-4-2 EN 61000-4-2	kV	8: in open air (level 3) 4: in indirect mode (level 2)
Immunity to fast transient currents	Conforming to IEC 61000-4-4 EN 61000-4-4	kV	2: power, AS-Interface, 24 V and sensor (level 3)
Immunity to dissipated shock wave	Conforming to IEC 61000-4-5 EN 61000-4-5	kV	4/2: power (level 4) 2/0.5: power, AS-Interface, 24 V and sensor (level 2)
Immunity to conducted radio-frequency interference	Conforming to IEC 61000-4-6 ENV 50 141	V/m	10
Immunity to radiated radio-frequency interference	Conforming to IEC 61000-4-3 ENV 50 140 and ENV 50 204 (GSM)	V/m	10
Radio-conducted and radio-radiated rejection	ENV 55 011/CISPR11 (G1)		Class B

*(1) Only for metal enclosures with letter **U** at the end of the reference. Certification pending.*

TeSys enclosed starters
D.O.L. starters for AS-Interface cabling system

Starters for AS-interface bus

Cabling

Starter type				LF3		LF4	
				Min.	Max.	Min.	Max.
Power supply cabling	Screw clamp terminals	Solid cable	mm²	1 x 1.5	2 x 6	1 x 1.5	2 x 6
		Flexible cable without cable end	mm²	1 x 1.5	2 x 6	1 x 1.5	2 x 6
		Flexible cable with cable end	mm²	1 x 1.5	2 x 4	1 x 1.5	2 x 4
		Tightening torque (1)	N.m	1.7	1.7	1.7	1.7
	Cable Gland (Pg 16)	Clamping capacity	mm	10	15	10	15
				Min.	Max.	Min.	Max.
Motor cabling	Screw clamp terminals	Solid cable	mm²	1 x 1.5	2 x 4	1 x 1.5	1 x 4
		Flexible cable without cable end	mm²	1 x 1.5	2 x 4	1 x 1.5	1 x 4
		Flexible cable with cable end	mm²	1 x 1.5	1 x 1.5 + 1 x 2.5	1 x 1.5	1 x 2.5
		Tightening torque (1)	N.m	0.8	0.8	0.8	0.8
	Cable Gland (Pg 16)	Clamping capacity	mm	10	15	10	15
				Min.	Max.	Min.	Max.
Output control relay cabling	Terminal block	Solid cable	mm²	0.5	1.5	0.5	1.5
		Flexible cable without cable end	mm²	0.5	1.5	0.5	1.5
		Flexible cable with cable end	mm²	0.5	1.5	0.5	1.5
		Tightening torque (2)	N.m	0.7	0.7	0.7	0.7
	Cable gland	Clamping capacity Pg 13	mm	8	13	8	13
		Pg 16	mm	10	15	10	15

Pole electrical characteristics

Utilisation category	Conforming to IEC 60947-2 (circuit breaker)			A
	Conforming to 947-4-1 (motor starter)			AC-3
Rated operational voltage (Ue)	Conforming to IEC 60947		V	415
Rated insulation voltage (Ui)	Conforming to IEC 60947		V	415
Rated operational frequency	Conforming to IEC 60947		Hz	50/60
Breaking capacity (Ics and Icu)	Conforming to IEC 60947-2	230/240 V	kA	> 100
		400/415 V	kA	> 100
Sensitivity to phase failure	Conforming to IEC 60947-4-1 § 7-2-1-5-2			Yes

Circuit breaker characteristics (manual operation)

Mechanical durability	C.O.: closing, opening	C.O.	100 000
Electrical durability	For AC-3 duty	C.O.	100 000
Duty class	Maximum operating rate	C.O./h	25

Circuit breaker characteristics (automatic operation)

Maximum operating rate	In operating cycles per hour		3600	
Mechanical durability	In millions of operating cycles		30	5
Electrical durability	In category AC-3 at 8.5 A		800 000	

Other characteristics

Starters with rotary control knob	Circuit breaker type GV2 P		See pages A1-57 to A1-57
Non-reversing starters	Contactor LP4 K0901BW3 (3)		See pages A1-57 to A1-57
Reversing starters	Reversing contactor LP5 K0901BW3 (4)		See pages A1-57 to A1-57

(1) Philips n° 2 or flat screwdriver Ø5.5.
(2) Flat screwdriver Ø3.5.
(3) LP4 K1201BW3 for circuit breaker ratings 00 and 16.
(4) LP5 K1201BW3 for circuit breaker ratings 00 and 16.

TeSys enclosed starters
D.O.L. starters for AS-Interface cabling system

Starters for AS-interface bus

Sensor inputs

Starter type				LF3, LF4
Cabling				M12
Nominal input values	Voltage		**V**	⎓ 24
	Maximum current available per sensor		**mA**	50
	Sensor supply (including ripple)		**V**	19…30
Input voltage range	At state 1	Voltage	**V**	⎓ > 11
		Current	**mA**	> 6
	At state 0	Voltage	**V**	⎓ < 5
		Current	**mA**	< 2
Maximum number of sensors				2
Proximity sensor compatibility				2-wire/3-wire
Isolation with respect to the AS-Interface line				Yes
Input type				Resistive for PNP type sensor

Output control relay

Operating voltage limit	a.c. supply		**V**	250
	d.c. supply		**V**	30
Thermal current at 40 °C (Ith)			**A**	5
Service life on an ∿ 24 V load	Resistive load AC-12	Millions of operating cycles		0.1 (1) in 5 A current, 1 (2) in 1 A current.
	Inductive load AC-14	Millions of operating cycles		0.5 (2) in 1 A current, 1 (2) in 0.5 A current, 5 (3) in 0.25 A current.
Service life on a ⎓ 24 V load	Resistive load DC-12	Millions of operating cycles		0.1 (1) in 5 A current, 0.2 (1) in 2 A current.
	Resistive load DC-3	Millions of operating cycles		0.5 (2) in 1 A current, > 1 (3) in 0.25 A current.
Response time	Latching		**ms**	< 10
	Unlatching		**ms**	< 15
Contact type				C/O
Built-in protection	Against overload and short-circuits			None, a quick-blow fuse must be fitted
	Against a.c. or d.c. inductive overloads			Protected against overvoltages generated by switching the coils of preactuators
Isolation	rms voltage between output and earth or between output and internal logic		**V**	1500, 50/60 Hz for 60 s
	Insulation resistance between output terminals and AS-Interface		μΩ	> 1000

(1) 0.2 of an operation (C/O) per second.
(2) 0.5 of an operation (C/O) per second.
(3) 1 operation (C/O) per second.

TeSys enclosed starters
D.O.L. starters for AS-Interface cabling system

Starters for AS-interface bus

Consumption

Starter type			Product configured for supply from an auxiliary ⎓ 24 V supply	
			LF3	LF4
Current consumption	From the AS-Interface line (1)	De-energised	20 mA	20 mA
		Inrush	20 mA	20 mA
		Sealed	20 mA	20 mA
		Per sensor	Sensor consumption (50 mA max) + 10 mA (signal = 1)	
		Relays	20 mA	
	From the auxiliary ⎓ 24 V supply	De-energised	0	0
		Inrush	110 mA	110 mA
		Energised	30 mA	30 mA

Data exchange characteristics

AS-Interface profile		7.D.F.F (standard addressing 7.A.7.0 (extended addressing A/B)	
Data bits (commands)	Bit value	**= 0**	**= 1**
	Command D0 (O)	Stop - forward running	Start - forward running
	Command D1 (O)	Stop - reverse running	Start - reverse running (2)
	Command D2 (O)	Deactivation of control relay	Activation of control relay
	Command D3 (O)	Not Used	Not Used
Data bits (status)	Bit value	**= 0**	**= 1**
	Status D0 (I)	Not ready or fault	Ready
	Status D1 (I)	Stopped	Running
	Status D2 (I)	Sensor 1 signal absent (3)	Sensor 1 signal present (3)
	Status D3 (I)	Sensor 2 signal absent (4)	Sensor 2 signal present (4)

(1) 30 mA maximum + sensor consumption.
(2) Only on LF4.
(3) Sensor 1 or circuit breaker fault signal, depending on configuration.
(4) Sensor 1 or sensor 2 signal or control/local mode, depending on configuration.

TeSys enclosed starters
D.O.L. starters for AS-Interface cabling system

Starters for AS-interface bus

Non-reversing and reversing starters in insulated (plastic) enclosure

With cable glands

LF● P●●●

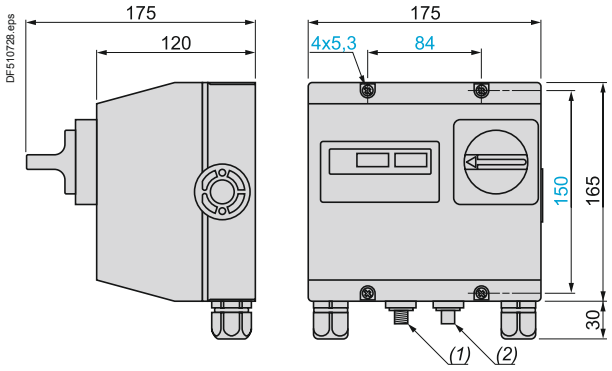

With HARTING plug-in connectors (A74)

LF● P●●●A74

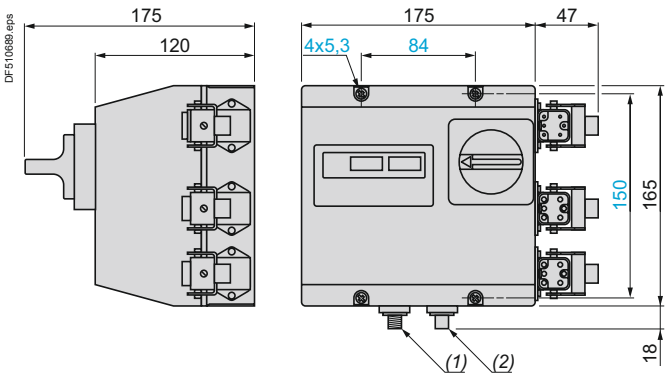

With cable glands
Incorporating sensor and local/AS-Interface control variant (A79)

LF● P●●●A79

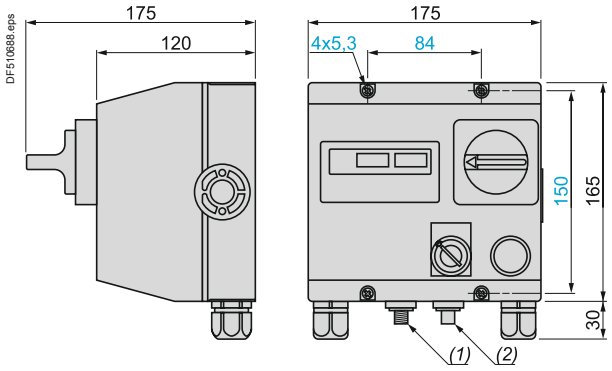

With HARTING plug-in connectors (A74)
Incorporating sensor and local/AS-Interface control variant (A79)

LF● P●●●A79A74

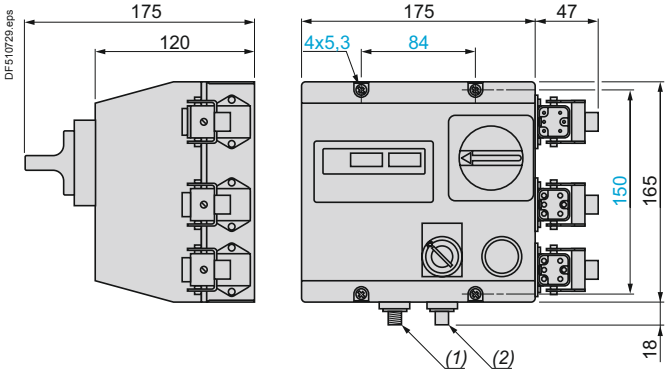

Knock-outs for cable gland	
From above	2 x Pg16 and 2 x Pg13
From below	2 x Pg16 (cable glands supplied)

(1) M12 male connector for connection to AS-Interface and auxiliary 24 V supply.
(2) M12 female connector for connection to sensor.

References:
A1/30 and A1/31

Schemes:
A1/66 and A1/67

TeSys enclosed starters
D.O.L. starters for AS-Interface cabling system

Starters for AS-interface bus

Non-reversing and reversing starters in metal enclosure

With cable glands

LF● MP●●●

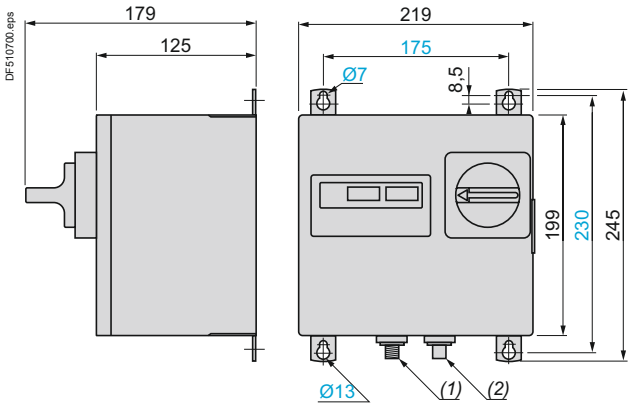

With HARTING plug-in connectors (A74)

LF● MP●●●A74

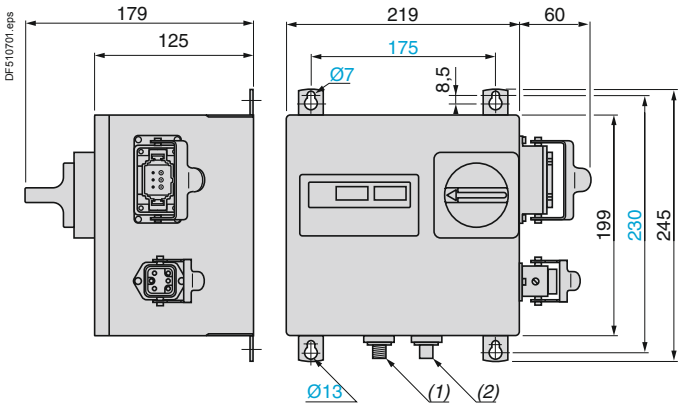

With cable glands
Incorporating sensor and local/AS-Interface control variant (A79)

LF● MP●●●A79

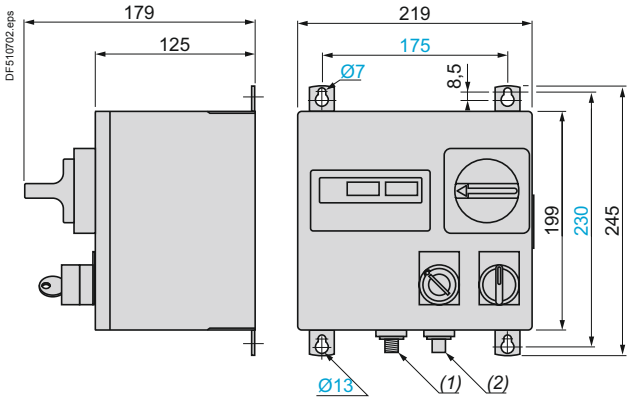

With HARTING plug-in connectors (A74)
Incorporating sensor and local/AS-Interface control variant (A79)

LF● MP●●●A79A74

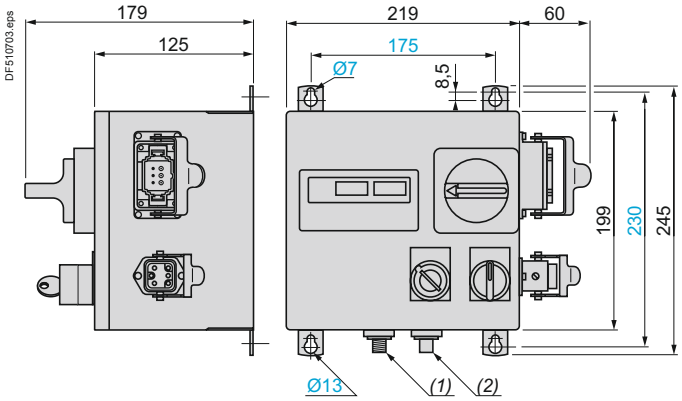

Knock-outs for cable gland	Standard enclosure	Enclosure with variant A74
From above	3 x Pg16	1 x Pg16
From below	2 x Pg16	1 x Pg16

(1) M12 male connector for connection to AS-Interface and auxiliary 24 V supply.
(2) M12 female connector for connection to sensor.

References:
A1/30 and A1/31

Schemes:
A1/66 and A1/67

TeSys enclosed starters
D.O.L. starters for AS-Interface cabling system

Starters for AS-interface bus

Non-reversing starters LF3

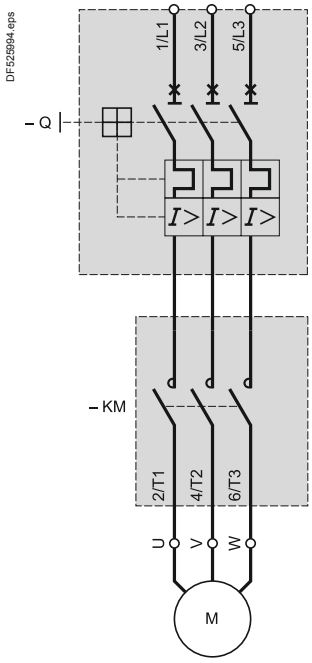

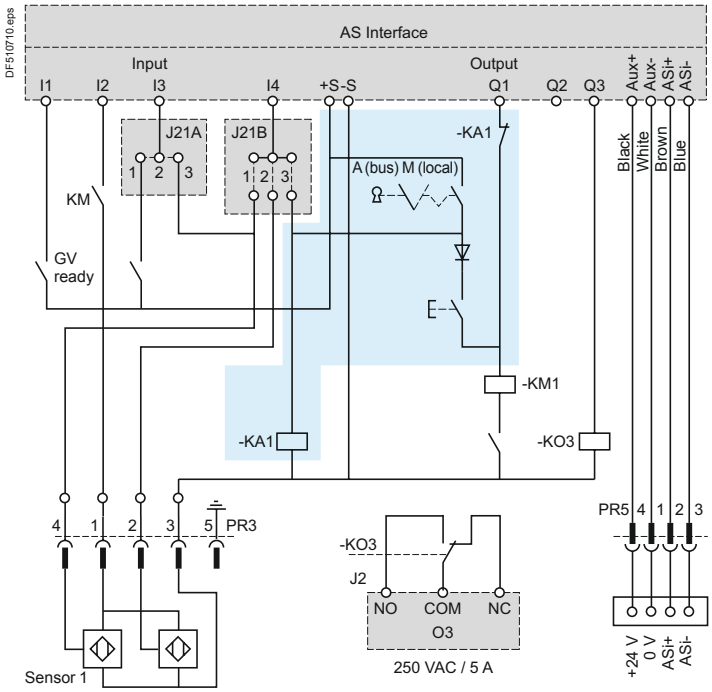

Insulated enclosure with variant A79 or metal enclosure with variant A79

Reversing starters LF4

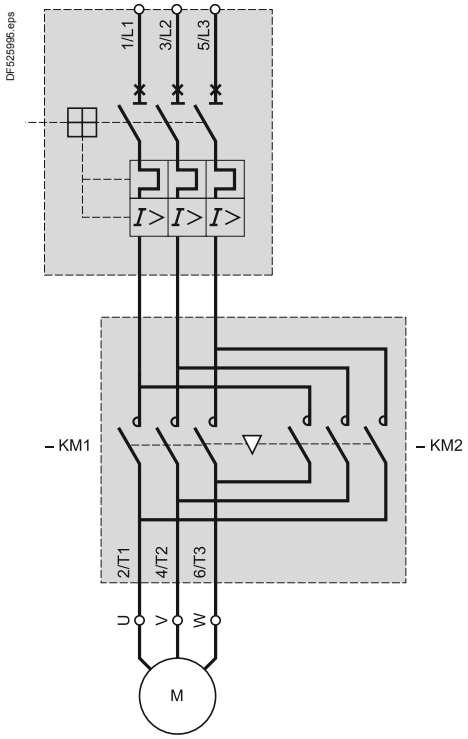

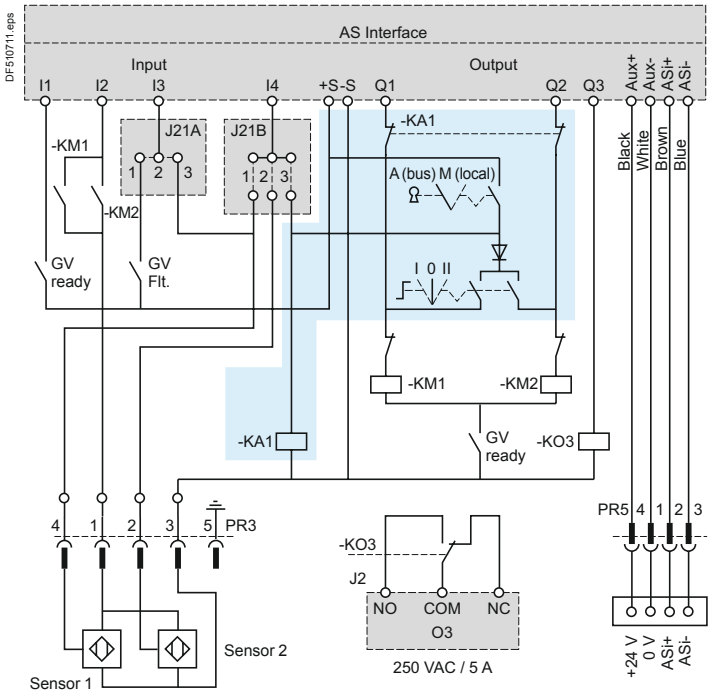

Insulated enclosure with variant A79 or metal enclosure with variant A79

References:
A1/30 and A1/31

Dimensions:
A1/64 and A1/65

TeSys enclosed starters
D.O.L. starters for AS-Interface cabling system

Starters for AS-interface bus

Non-reversing and reversing starters with 2 sensors, an auxiliary supply and a control relay

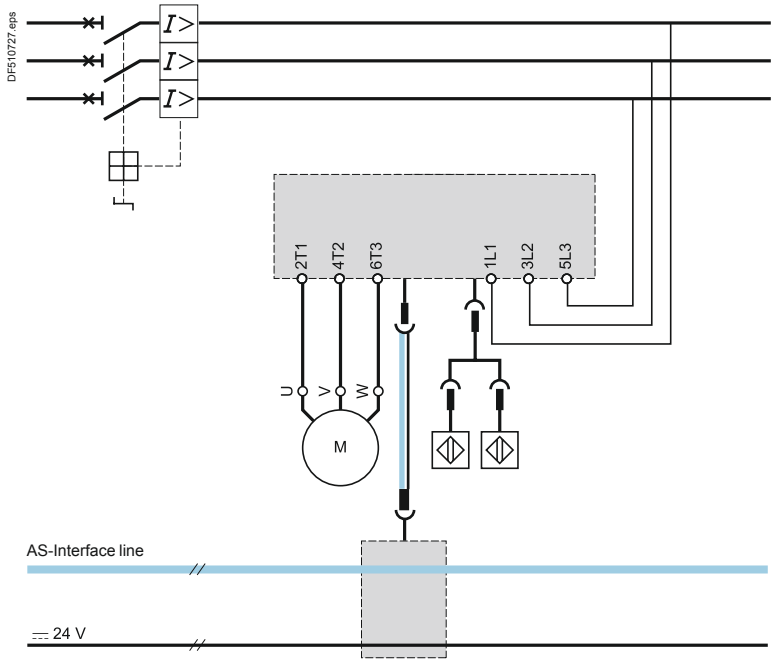

Connections on enclosure

M12 male connector for AS-Interface and 24 V auxiliary supply

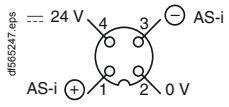

Sensor M12 female connector

Limit switch

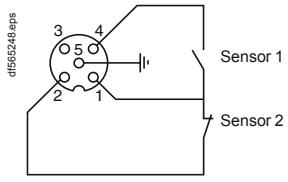

2-wire PNP type sensor

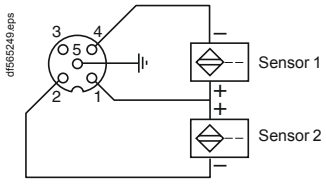

3-wire PNP type sensor

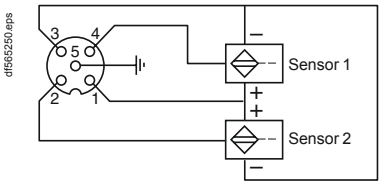

References:
A1/30 and A1/31

Dimensions:
A1/64 and A1/65

TeSys enclosed starters
D.O.L. starters for AS-Interface cabling system

Starters for AS-interface bus

Starters in enclosures with cable glands

DF510678.eps

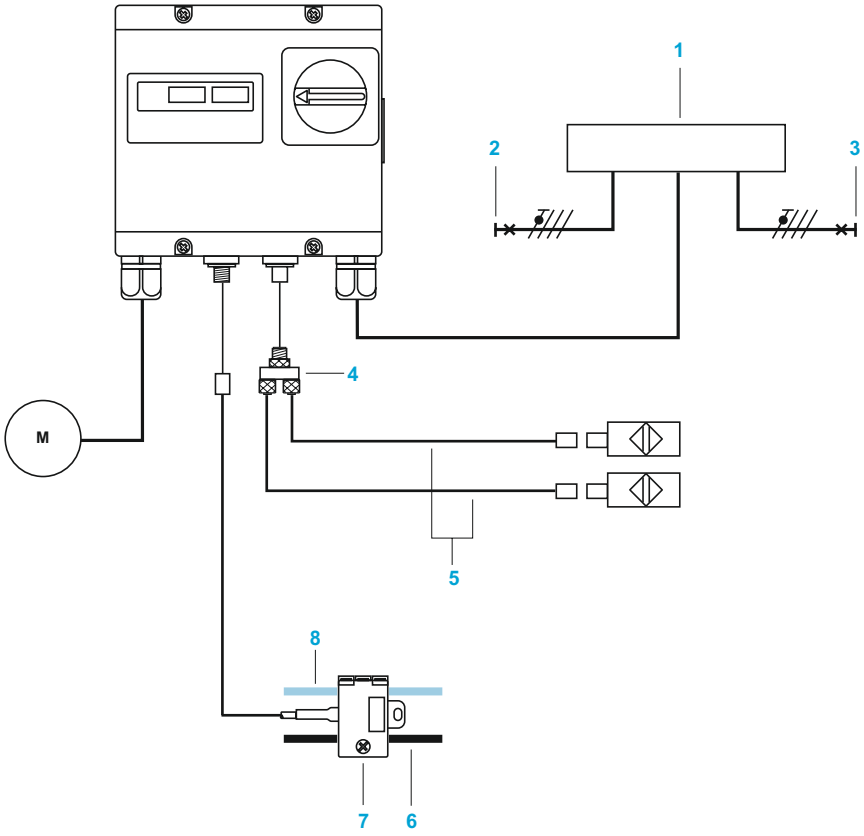

1 Junction box

2 Incoming power

3 Power extension

4 **FTX CY1212**: splitter block

5 **XZ CR1511040A●**: extension

6 **XZ CB1●●02**: flat cable (black) for auxiliary supply

7 **XZ CG01403D**: tap link for two cables

8 **XZ CB1●●01**: flat cable (yellow) for AS-Interface

TeSys enclosed starters
D.O.L. starters for AS-Interface cabling system

Starters for AS-interface bus

Starters in insulated enclosures with HARTING type plug-in power connectors

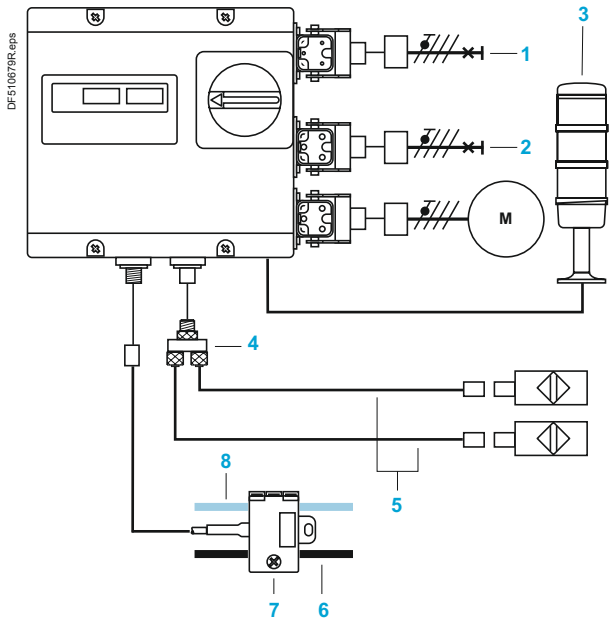

1 Incoming power
2 Power extension
3 Control relay (example: illuminated indicator bank
4 **FTX CY1212**: splitter block
5 **XZ CR1511040A●**: extension
6 **XZ CB1●●02**: flat cable (black) for auxiliary supply
7 **XZ CG01403D**: tap link for two cables
8 **XZ CB1●●01**: flat cable (yellow) for AS-Interface

Configuration of HARTING connectors to be fitted on cables
(to be ordered separately)

	Number and HARTING reference	
	for incoming power female connector	for power extension and motor connection male connectors
Straight cover	1 x **09-20-003-0420**	2 x **09-20-003-0420**
Male insert 6-way, 400 V	–	2 x **09-12-005-3101**
Female insert 6-way, 400 V	1 x **09-12-005-3001**	–
Male contacts 2.5 mm²	–	8 x **09-33-000-6102**
Female contacts 2.5 mm²	3 x **09-33-000-6202**	–
Plug for the last socket	–	1 x **09-20-003-5408**

Starters in metal enclosures with HARTING type plug-in power connectors

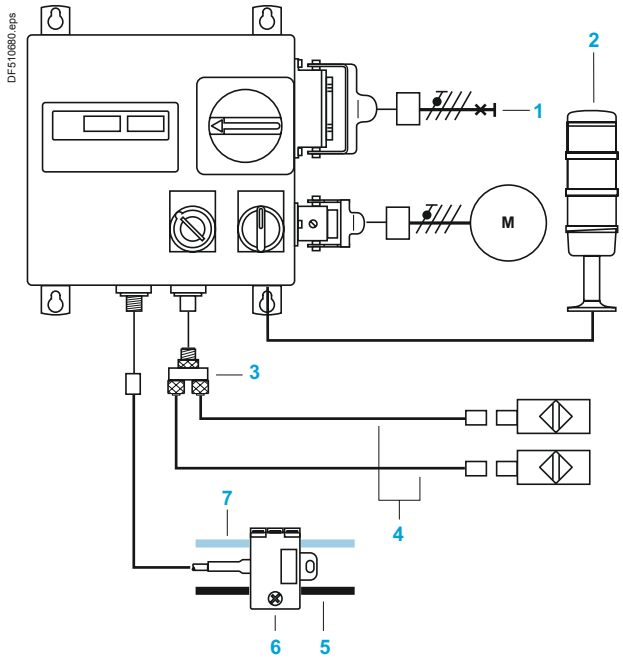

1 Incoming power
2 Control relay (example: illuminated indicator bank
3 **FTX CY1212**: splitter block
4 **XZ CR1511040A●**: extension
5 **XZ CB1●●02●**: flat cable (black) for auxiliary supply
6 **XZ CG1403D**: tap link for two cables
7 **XZ CB1●●01●**: flat cable (yellow) for AS-Interface

Configuration of HARTING connectors to be fitted on cables
(to be ordered separately)

	Number and HARTING reference	
	for incoming power female connector	for power extension and motor connection male connectors
Straight cover	1 x **09-30-006-442** (1) 1 x **09-30-006-443** (2)	2 x **09-20-003-1440**
Male insert 6-way, 400 V	–	2 x **09-12-005-3101**
Female insert 6-way, 400 V	1 x **09-33-006-2702**	–
Male contacts 2.5 mm²	–	5 x **09-33-000-6102**
Female contacts 2.5 mm²	3 x **09-33-000-6207**	–

(1) PG21.
(2) PG29.

Open, pre-cabled motor starters

Direct-on-line and reversing starters

Composition	Range		Page
Fuse + contactor (direct-on-line)	Up to 37 kW		A2/3
Motor circuit breaker + contactor (direct-on-line) Coordination type 1	Up to 5.5 kW		A2/4
Motor circuit breaker + 2 contactors (reversing) Coordination type 1	Up to 5.5 kW		A2/5
Motor circuit breaker + contactor (direct-on-line) Coordination type 1	Up to 30 kW	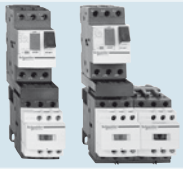	A2/6
Motor circuit breaker + 2 contactors (reversing) Coordination type 1	Up to 30 kW		A2/7
Motor circuit breaker + contactor (direct-on-line) Coordination type 2	Up to 30 kW		A2/8
Motor circuit breaker + 2 contactors (reversing) Coordination type 2	Up to 30 kW		A2/9
Star-delta starters			
3 contactors + 1 time delay aux. block	Up to 132 kW	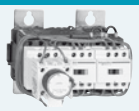	A2/10
3 contactors + 1 time delay aux. block + 1 control relay	90 to 375 kW	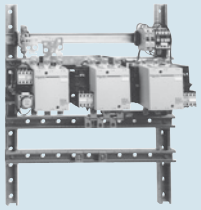	A2/11
For customer star-delta assembly			
Separated components and mounting kits for suggested motor starter components combinations - on plate or mounting rail	Up to 132 kW	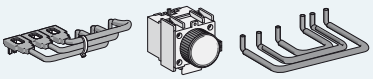	A2/12
Separated components for suggested motor starter combinations - on chassis	90 to 375 kW	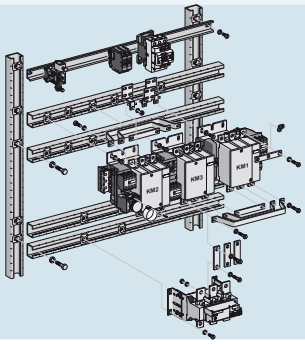	A2/16

Motor starters - open version

D.O.L. starters, plate mounted, for motor control 4 to 37 kW (1), with isolating device, pre-assembled

Direct-on-line and reversing


PF5208459.tif

LC4 D09A●●

References

Utilisation category AC-3							Fuses to be fitted by the customer		Basic reference, to be completed by adding the voltage code (2)	Weight
Standard power ratings of 3-phase motors 50/60 Hz						Operational current				
220 V 230 V	380 V 400 V	415 V	440 V	500 V	660 V 690 V	440 V up to	Size	Type aM		
kW	kW	kW	kW	kW	kW	A		A		kg
2.2	4	4	4	5.5	–	**9**	10 x 38	12	**LC4D09A●●**	0.870
3	5.5	5.5	5.5	7.5	–	**12**	10 x 38	16	**LC4D12A●●**	0.870
4	7.5	9	9	10	–	**18**	10 x 38	20	**LC4D18A●●**	1.150
5.5	11	11	11	15	–	**25**	10 x 38	25	**LC4D25A●●**	1.580
7.5	15	15	15	18.5	18.5	**32**	14 x 51	32	**LC4D32A●●**	2.630
11	18.5	22	22	22	30	**40**	14 x 51	40	**LC4D40●●**	2.930
15	22	25	30	30	33	**50**	22 x 58	63	**LC4D50●●**	3.200
18.5	30	37	37	37	37	**65**	22 x 58	80	**LC4D65●●**	3.340
22	37	45	45	55	45	**80**	22 x 58	80	**LC4D80●●**	3.650

Specifications

Pre-wired power and control circuit connections.

3-pole isolating device

(1) Thermal overload relay to be ordered separately (see pages B11/4 and B11/5).
(2) Standard control circuit voltages:

Volts	24	42	48	110	220	230	240	380	400	415	440
50/60 Hz	B7	D7	E7	F7	M7	P7	U7	Q7	V7	N7	R7

For other voltages, please consult your Regional Sales Office.

Dimensions: page A2/22
Schemes: page A2/22

Motor starters - open version

Combination automatic motor starters with overload protection built into the circuit breaker

D.O.L. starters, non-reversing, from 0.37 to 5.5 kW at 400/415 V, type 1 coordination

This pre-assembled combination comprises:
- 1 motor circuit breaker GV2 ME,
- 1 3-pole contactor LC1 K,
- 1 combination block GV2 AF01.

Characteristics

Starter type		GV2		ME06K1	ME07K1	ME08K1	ME10K1	ME14K1	ME16K1
Breaking capacity (Iq) [(1)]	Conforming to IEC 60947-4-1	400/415 V	**kA**	50	50	50	50	50	15
		440 V	**kA**	50	50	50	50	15	8
		500 V	**kA**	50	50	50	50	10 (4 kW) 6 (5.5 kW)	6

References

PF511560.tif



GV2 ME10K1●●

D.O.L. starters, non-reversing

Standard power ratings of 3-phase motors 50/60 Hz in AC-3			Setting range of thermal trips	Fixed magnetic tripping current 13 Irth	For customer assembly		Pre-assembled	Weight
400/ 415 V	440 V	500 V			Motor circuit-breaker Reference	Contactor Reference to be completed [(2)]	Basic reference, to be completed by adding the voltage code [(3)]	
kW	kW	kW	A	A				kg
0.37 0.55 –	0.37 0.55 –	0.37 0.55 0.75	1…1.6	22.5	GV2 ME06	LC1 K06	**GV2ME06K1●●**	0.460
0.75 –	0.75 1.1	– 1.1	1.6…2.5	33.5	GV2 ME07	LC1 K06	**GV2ME07K1●●**	0.460
1.1 1.5	– 1.5	1.5 2.2	2.5…4	51	GV2 ME08	LC1 K06	**GV2ME08K1●●**	0.460
2.2 –	2.2 3	– 3	4…6.3	78	GV2 ME10	LC1 K06	**GV2ME10K1●●**	0.460
3 4	– 4	4 5.5	6…10	138	GV2 ME14	LC1 K09	**GV2ME14K1●●**	0.460
5.5	5.5	7.5	9…14	170	GV2 ME16	LC1 K12	**GV2ME16K1●●**	0.460

Add-on blocks

Description	Sold in lots of	Unit reference
Combination block between circuit breaker and contactor	10	**GV2AF01**

*(1) The breaking performance of circuit breakers **GV2 ME** can be increased by adding a current limiter **GV1 L3**, see page B6/56.*

(2) Please consult your Regional Sales Office.

(3) Standard control circuit voltages (for other voltages, please consult your Regional Sales Office):

Volts	24	110	220/230	230	230/240	380/400
∼ **50/60 Hz**	B7	F7	M7	P7	U7	Q7
⎓ [(4)]	BW3	–	–	–	–	–

(4) Coil: low consumption (1.5 W), wide range (0.7…1.3 Uc) with integral suppression device as standard.

Dimensions: page A2/23
Schemes: page A2/25

Motor starters - open version

Combination automatic motor starters with overload protection built into the circuit breaker

D.O.L. starters, reversing, from 0.37 to 5.5 kW at 400/415 V, type 1 coordination

This pre-assembled combination comprises:
- 1 motor circuit breaker GV2 ME,
- 1 3-pole reversing contactor LC2 K,
- 1 combination block GV2 AF01.

Characteristics

Starter type		GV2		ME06K2	ME07K2	ME08K2	ME10K2	ME14K2	ME16K2
Breaking capacity (Iq) (1)	Conforming to IEC 60947-4-1	400/415 V	kA	50	50	50	50	50	15
		440 V	kA	50	50	50	50	15	8
		500 V	kA	50	50	50	50	10/4 kW 6/5.5 kW	6

References

PF511103.ttf



GV2 ME10K2●●

D.O.L. starters, reversing

Standard power ratings of 3-phase motors 50/60 Hz in AC-3			Setting range of thermal trips	Fixed magnetic tripping current 13 Irth	For customer assembly		Pre-assembled	Weight
400/415 V	440 V	500 V			Motor circuit-breaker Reference	Contactor Reference to be completed (2)	Basic reference, to be completed by adding the voltage code (3)	
kW	kW	kW	A	A				kg
0.37 0.55 –	0.37 0.55 –	0.37 0.55 0.75	1…1.6	22.5	GV2 ME06	LC2 K06	**GV2ME06K2●●**	0.460
0.75 –	0.75 1.1	– 1.1	1.6…2.5	33.5	GV2 ME07	LC2 K06	**GV2ME07K2●●**	0.460
1.1 1.5	– 1.5	1.5 2.2	2.5…4	51	GV2 ME08	LC2 K06	**GV2ME08K2●●**	0.460
2.2 –	2.2 3	– 3	4…6.3	78	GV2 ME10	LC2 K06	**GV2ME10K2●●**	0.460
3 4	– 4	4 5.5	6…10	138	GV2 ME14	LC2 K09	**GV2ME14K2●●**	0.460
5.5	5.5	7.5	9…14	170	GV2 ME16	LC2 K12	**GV2ME16K2●●**	0.460

Add-on blocks

Description	Sold in lots of	Unit reference
Combination block between circuit breaker and contactor	10	**GV2AF01**

*(1) The breaking performance of circuit breakers **GV2 ME** can be increased by adding a current limiter **GV1 L3**, see page B6/56.*

(2) Please consult your Regional Sales Office.

(3) Standard control circuit voltages (for other voltages, please consult your Regional Sales Office):

Volts	24	110	220/230	230	230/240	380/400
∿ 50/60 Hz	B7	F7	M7	P7	U7	Q7
⎓ (4)	BW3	–	–	–	–	–

(4) Coil: low consumption (1.5 W), wide range (0.7…1.3 Uc) with integral suppression device as standard.

***Note:** The combinations are valid for IE2 motors and IE3 with maximum starting current = 7.5 x motor rating current (see pages A6/4 and A6/5).*

Dimensions: page A2/23

Schemes: page A2/25

Motor starters - open version

Combination automatic motor starters with overload protection built into the circuit breaker

D.O.L. starters, non-reversing, from 0.06 to 30 kW at 400/415 V, type 1 coordination

This pre-assembled combination comprises:
- 1 motor circuit breaker GV2 ME,
- 1 3-pole contactor LC1 D,
- 1 combination block GV2 AF3.

Characteristics

Starter type		GV2		DM 102 to DM 110	DM 114	DM 116	DM 120	DM 121	DM 122	DM 132
Breaking capacity (Iq) (1)	Conforming to IEC 60947-4-1	400/415 V	**kA**	50	50	15	15	15	15	10
		440 V	**kA**	50	15	8	8	6	6	6
		500 V	**kA**	50	6	6	6	4	4	4

References



GV2 DM102●●

D.O.L. starters, non-reversing

Standard power ratings of 3-phase motors 50/60 Hz in AC-3			Setting range of thermal trips	Fixed magnetic tripping current 13 Irth	For customer assembly		Pre-assembled	Weight
400/415 V	440 V	500 V			Motor circuit-breaker Reference	Contactor Reference to be completed (2)	Basic reference, to be completed by adding the voltage code (2)	
kW	kW	kW	A	A				kg
0.06	0.06	–	0.16…0.25	2.4	GV2ME02	LC1D09●●	**GV2DM102●●** (3)	0.596
0.09 –	0.09 0.12	–	0.25…0.40	5	GV2ME03	LC1D09●●	**GV2DM103●●** (3)	0.596
0.12 0.18	– 0.18	– –	0.40…0.63	8	GV2ME04	LC1D09●●	**GV2DM104●●** (3)	0.596
0.25 0.37	0.25 0.37	– –	0.63…1	13	GV2ME05	LC1D09●●	**GV2DM105●●** (3)	0.596
– 0.55 –	– 0.55 –	0.37 0.55 0.75	1…1.6	22.5	GV2ME06	LC1D09●●	**GV2DM106●●** (3)	0.596
0.75 –	0.75 1.1	– 1.1	1.6…2.5	33.5	GV2ME07	LC1D09●●	**GV2DM107●●** (3)	0.596
1.1 1.5	– 1.5	1.5 2.2	2.5…4	51	GV2ME08	LC1D09●●	**GV2DM108●●** (3)	0.596
2.2 –	2.2 3	– 3	4…6.3	78	GV2ME10	LC1D09●●	**GV2DM110●●** (3)	0.596
3 4	– 4	4 5.5	6…10	138	GV2ME14	LC1D09●●	**GV2DM114●●** (3)	0.596
5.5	5.5	7.5	9…14	170	GV2ME16	LC1D12●●	**GV2DM116●●**	0.601
7.5 –	7.5 9	– 9	13…18	223	GV2ME20	LC1D18●●	**GV2DM120●●**	0.606
9	11	11	17…23	327	GV2ME21	LC1D25●●	**GV2DM121●●**	0.646
11	–	15	20…25	327	GV2ME22	LC1D25●●	**GV2DM122●●**	0.646
15	15	18.5	24…32	416	GV2ME32	LC1D32●●	**GV2DM132●●**	0.651

Add-on blocks

Description	Mounting of GV2	Sold in lots of	Unit reference
Combination block between circuit breaker and contactor	⊔ rail	10	**GV2AF3**
	Mounting plate LAD 311	10	**GV2AF4**

*(1) The breaking performance of circuit breakers **GV2 ME** can be increased by adding a current limiter **GV1 L3**, see page B6/56.*

(2) Standard control circuit voltages (for other voltages, please consult your Regional Sales Office):

Volts	24	220	230
∿ **50/60 Hz**	B7	M7	P7
⎓ (4)	BD	–	–

(3) Type 2 coordination also possible, see page A6/10.

*(4) Only available for **GV2 DM**. Coil with integral suppression device as standard.*

***Note:** The combinations are valid for IE2 motors and IE3 with maximum starting current = 7.5 x motor rating current (see pages A6/4 and A6/5).*

Dimensions: page A2/23
Schemes: page A2/25

Motor starters - open version

Combination automatic motor starters with overload protection built into the circuit breaker

D.O.L. starters, reversing, from 0.06 to 15 kW at 400/415 V, type 1 coordination

This pre-assembled combination comprises:
- 1 motor circuit breaker GV2 ME,
- 1 3-pole reversing contactor LC2 D,
- 1 combination block GV2AF3.

Characteristics

Starter type		GV2		DM202 to DM210	DM214	DM216	DM220	DM221	DM222	DM232
Breaking capacity (Iq) (1)	Conforming to IEC 60947-4-1	400/415 V	**kA**	50	50	15	15	15	15	10
		440 V	**kA**	50	15	8	8	6	6	6
		500 V	**kA**	50	10	6	6	4	4	4

References



GV2 DM202●●

D.O.L. starters, reversing (2)

Standard power ratings of 3-phase motors 50/60 Hz in AC-3			Setting range of thermal trips	Fixed magnetic tripping current 13 Irth	For customer assembly		Pre-assembled	Weight
400/415V	440 V	500 V			Motor circuit-breaker Reference	Contactor Reference to be completed (3)	Basic reference, to be completed by adding the voltage code (4)	
kW	kW	kW	A	A				kg
0.06	0.06	–	0.16…0.25	2.4	GV2ME02	LC2D09●●	**GV2DM202●●**	0.963
0.09 –	0.09 0.12	–	0.25…0.40	5	GV2ME03	LC2D09●●	**GV2DM203●●**	0.963
0.12 0.18	– 0.18	– –	0.40…0.63	8	GV2ME04	LC2D09●●	**GV2DM204●●**	0.963
0.25 0.37	0.25 0.37	– –	0.63…1	13	GV2ME05	LC2D09●●	**GV2DM205●●**	0.963
– 0.55 –	– 0.55 –	0.37 0.55 0.75	1…1.6	22.5	GV2ME06	LC2D09●●	**GV2DM206●●**	0.963
0.75 –	0.75 1.1	– 1.1	1.6…2.5	33.5	GV2ME07	LC2D09●●	**GV2DM207●●**	0.963
1.1 1.5	– 1.5	1.5 2.2	2.5…4	51	GV2ME08	LC2D09●●	**GV2DM208●●**	0.963
2.2 –	2.2 3	– 3	4…6.3	78	GV2ME10	LC2D09●●	**GV2DM210●●**	0.963
3 4	– 4	4 5.5	6…10	138	GV2ME14	LC2D09●●	**GV2DM214●●**	0.963
5.5	5.5	7.5	9…14	170	GV2ME16	LC2D12●●	**GV2DM216●●**	0.973
7.5 –	7.5 9	– 9	13…18	223	GV2ME20	LC2D18●●	**GV2DM220●●**	0.983
9	11	11	17…23	327	GV2ME21	LC2D25●●	**GV2DM221●●**	1.063
11	–	15	20…25	327	GV2ME22	LC2D25●●	**GV2DM222●●**	1.063
15	15	18.5	24…32	416	GV2ME32	LC2D32●●	**GV2DM232●●**	1.073

Add-on blocks

Description	Mounting of GV2	Sold in lots of	Unit reference
Combination block between circuit breaker and contactor	⊔ rail	10	**GV2AF3**
	Mounting plate LAD 311	10	**GV2AF4**

*(1) The breaking performance of circuit breakers **GV2ME** can be increased by adding a current limiter **GV1L3**, see page B6/56.*
(2) Type 2 coordination also possible, see page A6/12.
(3) See page B8/2.
(4) Standard control circuit voltages (for other voltages, please consult your Regional Sales Office):

Volts	24	220	230
∼ **50/60 Hz**	B7	M7	P7
⎓ (5)	BD	–	–

(5) Coil with integral suppression device as standard.

***Note:** The combinations are valid for IE2 motors and IE3 with maximum starting current = 7.5 x motor rating current (see pages A6/4 and A6/5).*

Dimensions:
page A2/23

Schemes:
page A2/25

Motor starters - open version

Combination automatic motor starters with overload protection built into the circuit breaker

Direct-on-line and reversing

D.O.L. starters, non-reversing, from 0.06 to 30 kW at 400/415 V, type 2 coordination

This pre-assembled combination comprises:
- 1 motor circuit breaker GV2 P,
- 1 3-pole contactor LC1 D,
- 1 combination block GV2 AF3.

Characteristics

Starter type		GV2		DP102 to DP110	DP114	DP116	DP120	DP121	DP122	DP132
Breaking capacity (Iq) (1)	Conforming to IEC 60947-4-1	400/415 V	kA	130	130	130	50	50	50	50
		440 V	kA	130	130	50	20	20	20	20
		500 V	kA	130	50	42	10	10	10	10

References



GV2 DP102●●





GV3 P651 + LC1 D65A●●

D.O.L. starters, non-reversing

Standard power ratings of 3-phase motors 50/60 Hz in AC-3			Setting range of thermal trips	Fixed magnetic tripping current 13 Irth	For customer assembly		Pre-assembled	Weight
400/415 V	440 V	500 V			Motor circuit-breaker Reference	Contactor Reference to be completed (2)	Basic reference, to be completed by adding the voltage code (3)	
kW	kW	kW	A	A				kg
0.06	0.06	–	0.16…0.25	2.4	GV2P02	LC1D09●●	**GV2DP102●●**	0.686
– 0.09	0.09 0.12	–	0.25…0.40	5	GV2P03	LC1D09●●	**GV2DP103●●**	0.686
0.12 0.18	– 0.18	– –	0.40…0.63	8	GV2P04	LC1D09●●	**GV2DP104●●**	0.686
0.25 0.37	0.25 0.37	– –	0.63…1	13	GV2P05	LC1D09●●	**GV2DP105●●**	0.686
– 0.55 –	– 0.55 –	0.37 0.55 0.75	1…1.6	22.5	GV2P06	LC1D09●●	**GV2DP106●●**	0.686
0.75 –	0.75 1.1	– 1.1	1.6…2.5	33.5	GV2P07	LC1D09●●	**GV2DP107●●**	0.686
1.1 1.5	– 1.5	1.5 2.2	2.5…4	51	GV2P08	LC1D09●●	**GV2DP108●●**	0.696
2.2 –	2.2 3	– 3	4…6.3	78	GV2P10	LC1D09●●	**GV2DP110●●**	0.736
3 4	– 4	4 5.5	6…10	138	GV2P14	LC1D09●●	**GV2DP114●●**	0.736
5.5 –	5.5 7.5	7.5 9	9…14	170	GV2P16	LC1D25●●	**GV2DP116●●**	0.741
7.5	9	–	13…18	223	GV2P20	LC1D25●●	**GV2DP120●●**	0.736
9	11	11	17…23	327	GV2P21	LC1D25●●	**GV2DP121●●**	0.741
11	–	15	20…25	327	GV2P22	LC1D25●●	**GV2DP122●●**	0.741
15	15	18.5	24…32	416	GV2P32	LC1D32●●	**GV2DP132●●**	0.741
18.5	–	–	30…40	560	GV3 P401 (4)	LC1D50A●●	–	1.725
–	18.5	22	30…40	560	GV3 P401 (4)	LC1D65A●●	–	1.730
22	–	–	37…50	700	GV3 P501 (4)	LC1D50A●●	–	1.725
–	22	30	37…50	700	GV3 P501 (4)	LC1D65A●●	–	1.730
30	37	–	48…65	910	GV3 P651 (4)	LC1D65A●●	–	1.730

Add-on blocks

Description	Mounting of GV2	Sold in lots of	Unit reference
Combination block between circuit breaker and contactor	⊔ rail	10	**GV2AF3**
	Mounting plate LAD 311	10	**GV2AF4**

*(1) The breaking performance of circuit breakers **GV2 P** can be increased by adding a current limiter **GV1 L3**, see page B6/56.*
(2) See page B8/2.
(3) Standard control circuit voltages (for other voltages, please consult your Regional Sales Office):

Volts	24	220	230
∼ **50/60 Hz**	B7	M7	P7
⎓ (5)	BD	–	–

*(4) Circuit breaker supplied without downstream **Ever**Link® power terminal block, which is required for vertical mounting. For side by side mounting, use a **GV3 P** circuit breaker with terminal blocks and the **GV3S** set of S-shape busbars (see page B8/21).*
(5) Coil with integral suppression device as standard.

***Note:** The combinations are valid for IE2 motors and IE3 with maximum starting current = 7.5 x motor rating current (see pages A6/4 and A6/5).*

Dimensions: page A2/23 and A2/24
Schemes: page A2/26

Motor starters - open version

Combination automatic motor starters with overload protection built into the circuit breaker

D.O.L. starters, reversing, from 0.06 to 30 kW at 400/415 V, type 2 coordination

This pre-assembled combination comprises:
- 1 motor circuit breaker GV2 P,
- 1 3-pole reversing contactor LC2 D,
- 1 combination block GV2 AF3.

Characteristics

Starter type		GV2		DP202 to DP210	DP214	DP216	DP220	DP221	DP222	DP232
Breaking capacity (Iq) (1)	Conforming to IEC 60947-4-1	400/415 V	kA	130	130	130	50	50	50	50
		440 V	kA	130	130	50	20	20	20	20
		500 V	kA	130	50	42	10	10	10	10

References

D.O.L. starters, reversing


PF511108.tif

GV2 DP202●●


PF511109.tif



GV3 P651
+
LC2 D65A●●

Standard power ratings of 3-phase motors 50/60 Hz in AC-3			Setting range of thermal trips	Fixed magnetic tripping current 13 Irth	For customer assembly		Pre-assembled	Weight
400/415 V	440 V	500 V			Motor circuit-breaker Reference	Contactor Reference to be completed (2)	Basic reference, to be completed by adding the voltage code (3)	
kW	kW	kW	A	A				kg
0.06	0.06	–	0.16…0.25	2.4	GV2P02	LC2D09●●	**GV2DP202●●**	1.053
–	0.09	–	0.25…0.40	5	GV2P03	LC2D09●●	**GV2DP203●●**	1.053
0.09	0.12							
0.12	–	–	0.40…0.63	8	GV2P04	LC2D09●●	**GV2DP204●●**	1.053
0.18	0.18	–						
0.25	0.25	–	0.63…1	13	GV2P05	LC2D09●●	**GV2DP205●●**	1.053
0.37	0.37	–						
–	–	0.37	1…1.6	22.5	GV2P06	LC2D09●●	**GV2DP206●●**	1.053
0.55	0.55	0.55						
–	–	0.75						
0.75	0.75	–	1.6…2.5	33.5	GV2P07	LC2D09●●	**GV2DP207●●**	1.053
–	1.1	1.1						
1.1	–	1.5	2.5…4	51	GV2P08	LC2D09●●	**GV2DP208●●**	1.073
1.5	1.5	2.2						
2.2	2.2	–	4…6.3	78	GV2P10	LC2D09●●	**GV2DP210●●**	1.153
–	3	3						
3	–	4	6…10	138	GV2P14	LC2D09●●	**GV2DP214●●**	1.153
4	4	5.5						
5.5	5.5	7.5	9…14	170	GV2P16	LC2D25●●	**GV2DP216●●**	1.163
–	7.5	9						
7.5	9	–	13…18	223	GV2P20	LC2D25●●	**GV2DP220●●**	1.153
9	11	11	17…23	327	GV2P21	LC2D25●●	**GV2DP221●●**	1.163
11	–	15	20…25	327	GV2P22	LC2D25●●	**GV2DP222●●**	1.163
15	15	18.5	24…32	416	GV2P32	LC2D32●●	**GV2DP232●●**	1.163
18.5	–	–	30…40	560	GV3 P401 (4)	LC2D50A●●	–	2.750
–	18.5	22	30…40	560	GV3 P401 (4)	LC2D65A●●	–	2.760
22	–	–	37…50	700	GV3 P501 (4)	LC2D50A●●	–	2.750
–	22	30	37…50	700	GV3 P501 (4)	LC2D65A●●	–	2.760
30	37	–	48…65	910	GV3 P651 (4)	LC2D65A●●	–	2.760

Add-on blocks

Description	Mounting of GV2	Sold in lots of	Unit reference
Combination block between circuit breaker and contactor	⊥r rail	10	**GV2AF3**
	Mounting plate LAD 311	10	**GV2AF4**

*(1) The breaking performance of circuit breakers **GV2 P** can be increased by adding a current limiter **GV1 L3**, see page B6/56.*

(2) See page B8/2.

(3) Standard control circuit voltages (for other voltages, please consult your Regional Sales Office):

Volts	24	220	230
∼ 50/60 Hz	B7	M7	P7
⎓ (5)	BD	–	–

*(4) Circuit breaker supplied without downstream **Ever**Link® power terminal block, which is required for vertical mounting. For side by side mounting, use a **GV3 P** circuit breaker with terminal blocks and the **GV3S** set of S-shape busbars (see page B8/21).*

(5) Coil with integral suppression device as standard.

***Note:** The combinations are valid for IE2 motors and IE3 with maximum starting current = 7.5 x motor rating current (see pages A6/4 and A6/5).*

Dimensions:
page A2/23 and A2/24

Schemes:
page A2/26

Motor starters - open version

Star-delta starters for motor control 5.5 to 132 kW (1), without isolating device, pre-assembled

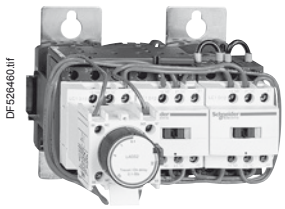
DF526460.tif

LC3 D32A●●

Plate mounted starters

Maximum operating rate: 30 starts/hour. Maximum starting time: 30 seconds.

Standard power ratings of squirrel cage motors Mains voltage - delta connection				Auxiliary contacts available on each contactor						Star delta mechanical interlock	Basic reference, to be completed by adding the voltage code (2)	Weight
				line		delta		star				
220/ 230 V	380/ 400 V	415 V	440 V	KM2		KM3		KM1				
kW	kW	kW	kW									kg
4	7.5	7.5	7.5	–	–	–	– (3)	–	1	With	LC3D09A●●	1.530
5.5	11	11	11	–	–	–	– (3)	–	1	With	LC3D12A●●	1.530
11	18.5	22	22	–	–	–	– (3)	–	1	With	LC3D18A●●	1.730
15	25	30	30	–	–	–	– (3)	–	1	With	LC3D32A●●	2.030
18.5	37	37	37	–	1	1	– (3)	–	1	Without	LC3D40●●	4.360
										With	LC3D40●●A64	4.500
30	55	59	59	–	1	1	– (3)	–	– (3)	Without	LC3D50●●	4.360
										With	LC3D50●●A64	4.500
37	75	75	75	–	1	1	– (3)	–	– (3)	Without	LC3D80●●	5.200
										With	LC3D80●●A64	5.400
63	110	110	110	–	1	1	– (3)	–	– (3)	Without	LC3D115●● (4)	11.800
										With	LC3D115●●A64 (4)	12.100
75	132	132	147	–	1	1	– (3)	–	1 (3)	Without	LC3D150●● (4)	12.100
										With	LC3D150●●A64 (4)	12.100

Rail mounted starters (35 mm ⎓ rail)

Standard power ratings of squirrel cage motors Mains voltage - delta connection				Auxiliary contacts available on each contactor						Star delta mechanical interlock	Basic reference, to be completed by adding the voltage code (2)	Weight
				line		delta		star				
220/ 230 V	380/ 400 V	415 V	440 V	KM2		KM3		KM1				
kW	kW	kW	kW									kg
Maximum operating rate: 12 starts/hour. Maximum starting time: 30 seconds.												
3	5.5	5.5	5.5	–	–	–	–	–	1	With	LC3K06●●	0.740
4	7.5	7.5	7.5	–	–	–	–	–	1	With	LC3K09●●	0.740
Maximum operating rate: 30 starts/hour. Maximum starting time: 30 seconds												
4	7.5	7.5	7.5	–	–	–	– (3)	–	1	With	LC3D090A●●	1.530
5.5	11	11	11	–	–	–	– (3)	–	1	With	LC3D120A●●	1.530
11	18.5	22	22	–	–	–	– (3)	–	1	With	LC3D180A●●	1.730
15	25	30	30	–	–	–	– (3)	–	1	With	LC3D320A●●	2.030

(1) Protection must be provided by the addition of a thermal overload relay, to be ordered separately. Select appropriate overload relay for setting at 0.58 of the full load rated motor current (see pages B11/4 and B11/5).

(2) Standard control circuit voltages:

Volts ∿ 50/60 Hz	24	36	42	48	110	220	230	240	380	400	415	440
Star-delta starters LC3 K06 and K09												
Code	B7	C7	D7	E7	F7	M7	P7	U7	–	–	–	–
Star-delta starters LC3 D09A...D150, LC3 D090A...D320A												
Code	B7	–	D7	E7	F7	M7	P7	U7	Q7	V7	N7	R7

For other voltages, please consult your Regional Sales Office.

*(3) One auxiliary contact block type **LAD N** can also be fitted, see page B8/36.*

*(4) These starters consist of contactors **LC1 D115** or **D150** without connectors.*

Presentation: page A2/27 Dimensions: page A2/28 Schemes: page A2/29

Motor starters - open version

Star-delta starters for motor control, 90 to 375 kW (1), without isolating device, pre-assembled

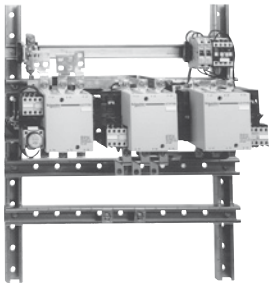

PF511080.tif

LC3 F●●●●●A64

Pre-assembled starters

Maximum operating rate: 12 starts/hour.
Maximum starting time:
LC3 F●●●●●: 20 seconds,
LC3 F●●●●●A64: 30 seconds (3 identical contactors).
Composition of starters without mechanical interlock, see pages 25018/3 and 25018/5.

Star-delta starters

Standard power ratings of squirrel cage motors Mains voltage - delta connection				Auxiliary contacts available on each contactor						Star delta mechanical interlock	Basic reference, to be completed by adding the voltage code (2)	Weight
				line		delta		star				
220/ 230 V	380/ 400 V	415 V	440 V	KM2		KM3		KM1	(3)			
kW	kW	kW	kW									kg
90	160	160	185	1	2	2	1	1	1	Without	**LC3F185●●**	16.500
										With	**LC3F185●●A64**	16.625
100	200	200	220	1	2	2	1	1	1	Without	**LC3F225●●**	16.500
										With	**LC3F225●●A64**	16.625
110	220	220	250	1	2	2	1	1	1	Without	**LC3F265●●**	27.300
										With	**LC3F265●●A64**	27.425
160	280	280	315	1	2	2	1	1	1	Without	**LC3F330●●**	37.000
										With	**LC3F330●●A64**	37.125
185	315	355	375	1	2	2	1	1	1	Without	**LC3F400●●**	37.000
										With	**LC3F400●●A64**	37.125

(1) Protection must be provided by the addition of a thermal overload relay, to be ordered separately. Select appropriate overload relay for setting at 0.58 of the full load rated motor current, see pages B11/11 and B11/12.

(2) Standard control circuit voltages:

Volts ~ 50/60 Hz	48	110	115	220/230	230	240	380/400	400	415
Code	E7	F7	FE7	M7	P7	U7	Q7	V7	N7

For other voltages, please consult your Regional Sales Office.

*(3) One auxiliary contact block type **LAD N** can be fitted.*

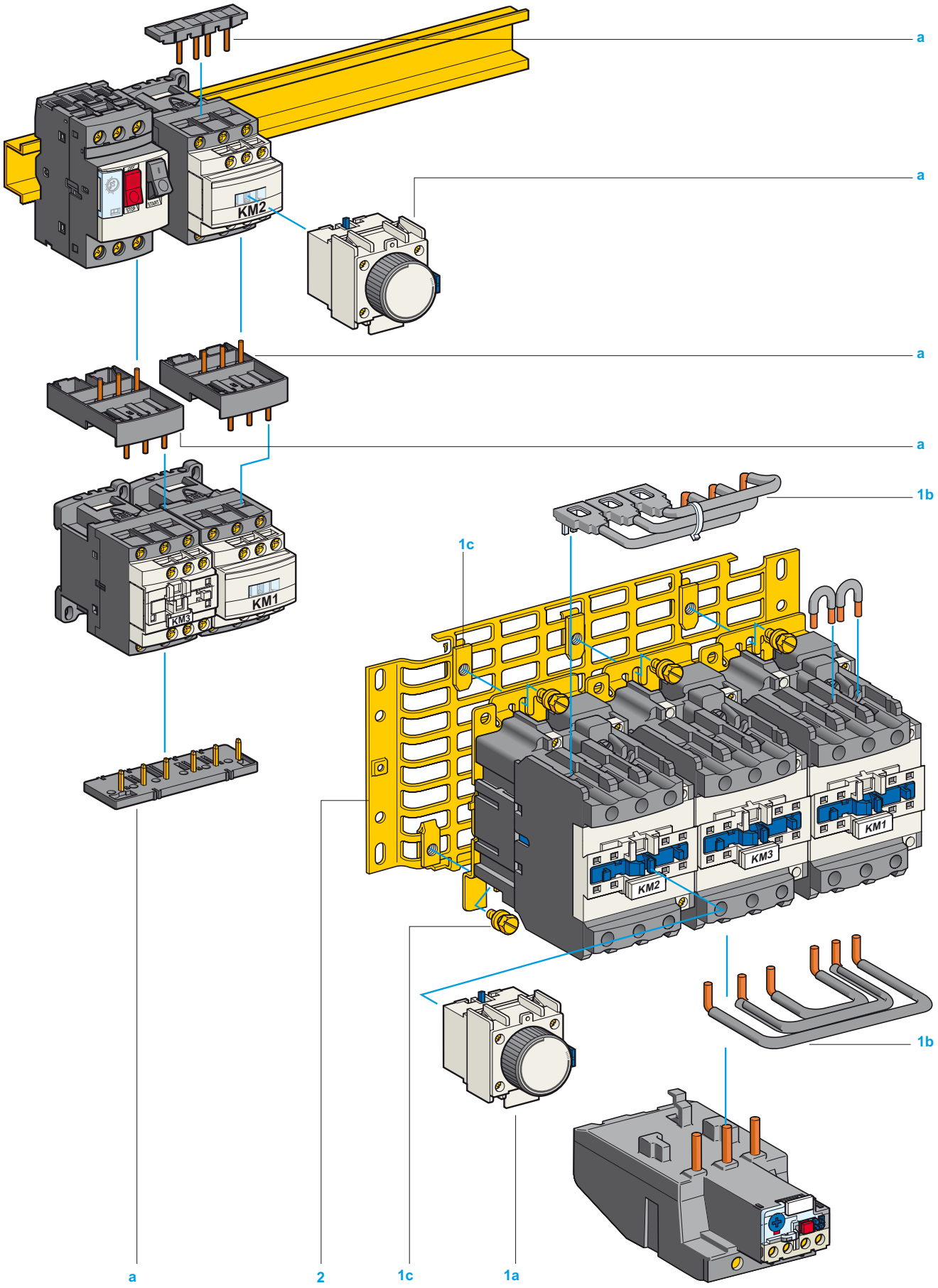
a
a
a
a
1b
1c
KM2
KM3
KM1
KM2
KM3
KM1
1b
a
2
1c
1a

Motor starters - open version

Star-delta starters, for motor control, 7.5 to 132 kW (1), without mechanical interlock, for customer assembly (on plate or on mounting rail) (2)

Star-delta

Starters for direct combination with a circuit breaker

Maximum operating rate: 30 starts/hour. Maximum starting time: 30 seconds

Standard power ratings of squirrel cage motors (3) Mains voltage-delta connection		Thermal-magnetic motor circuit breaker	Contactors (basic references, to be completed by adding the voltage code) (4)		
400/ 415 V	440 V		line	delta	star
kW	kW		KM2	KM3	KM1
7.5	7.5	GV2ME20	LC1D09●●	LC1D09●●	LC1D09●●
–	9	GV2ME20	LC1D12●●	LC1D12●●	LC1D09●●
9	11	GV2ME21	LC1D12●●	LC1D12●●	LC1D09●●
11	–	GV2ME22	LC1D12●●	LC1D12●●	LC1D09●●
15	15	GV2ME32	LC1D18●●	LC1D18●●	LC1D09●●

Separate component

Description	Illustration item no.	Reference
Mounting kit comprising: power circuit connections and 1 time delay contact block LAD S2	a	LAD912GV

Starters for mounting separately from upstream protection

Maximum operating rate: 30 starts/hour. Maximum starting time: 30 seconds.

Standard power ratings of squirrel cage motors (3) Mains voltage - delta connection				Contactors (basic references, to be completed by adding the voltage code) (4)			Separate components (see below)
220/ 230 V	380/ 400 V	415 V	440 V	line	delta	star	
kW	kW	kW	kW	KM2	KM3	KM1	Component types
4	7.5	7.5	7.5	LC1D09●●	LC1D09●●	LC1D09●●	D09
5.5	11	11	11	LC1D18●● (6)	LC1D12●●	LC1D09●●	D12
11	18.5	22	22	LC1D25●● (7)	LC1D25●● (7)	LC1D09●●	D18
15	25	30	30	LC1D32●●	LC1D32●●	LC1D18●●	D32
18.5	37	37	37	LC1D40A●●	LC1D40A●●	LC1D40A●●	D40
30	55	59	59	LC1D50A●●	LC1D50A●●	LC1D40A●●	D50
37	75	75	75	LC1D80●●	LC1D80●●	LC1D50A●●	D80
63	110	110	110	LC1D115●●	LC1D115●●	LC1D80●●	D115 (5)
75	132	132	147	LC1D150●●	LC1D150●●	LC1D115●●	D150 (5)

Separate components

Description	Illustration item no.	For components type (5)	Reference
Mounting kit comprising: - 1 time delay contact block LAD S2 (D09…D80) (3), - power circuit connections (D09…D80), - screws and clamps for fixing contactors to the plate (D40…D80).	1 a 1 b 1 c	D09 and D12	LAD91217
		D18 and D32	LAD93217
		D40 and D50	LA9D5017
		D80	LA9D8017
Equipment mounting plates	2	D09, D12, D18	LA9D12974
		D32	LA9D32974
		D40 and D50	LA9D40973
		D80	LA9D80973

(1) Protection must be provided by the addition of a thermal overload relay, to be ordered separately. Select appropriate overload relay for setting at 0.58 of the full load rated motor current, see pages B11/4 and B11/5.
(2) For mounting, assembly and cabling: please refer to installation instructions supplied with the equipment.
(3) See comments on page A2/27.
(4) See page B8/2.
(5) For D115 and D150 components, see illustration and separate parts on pages A2/14 and A2/15.
(6) A D12 component is adequate for the application, but use of a D18 is recommended. (connection capacity, correct use of power connection kit and connections).
(7) A D18 component is adequate for the application, but use of a D25 is recommended. (connection capacity, correct use of power connection kit and connections).

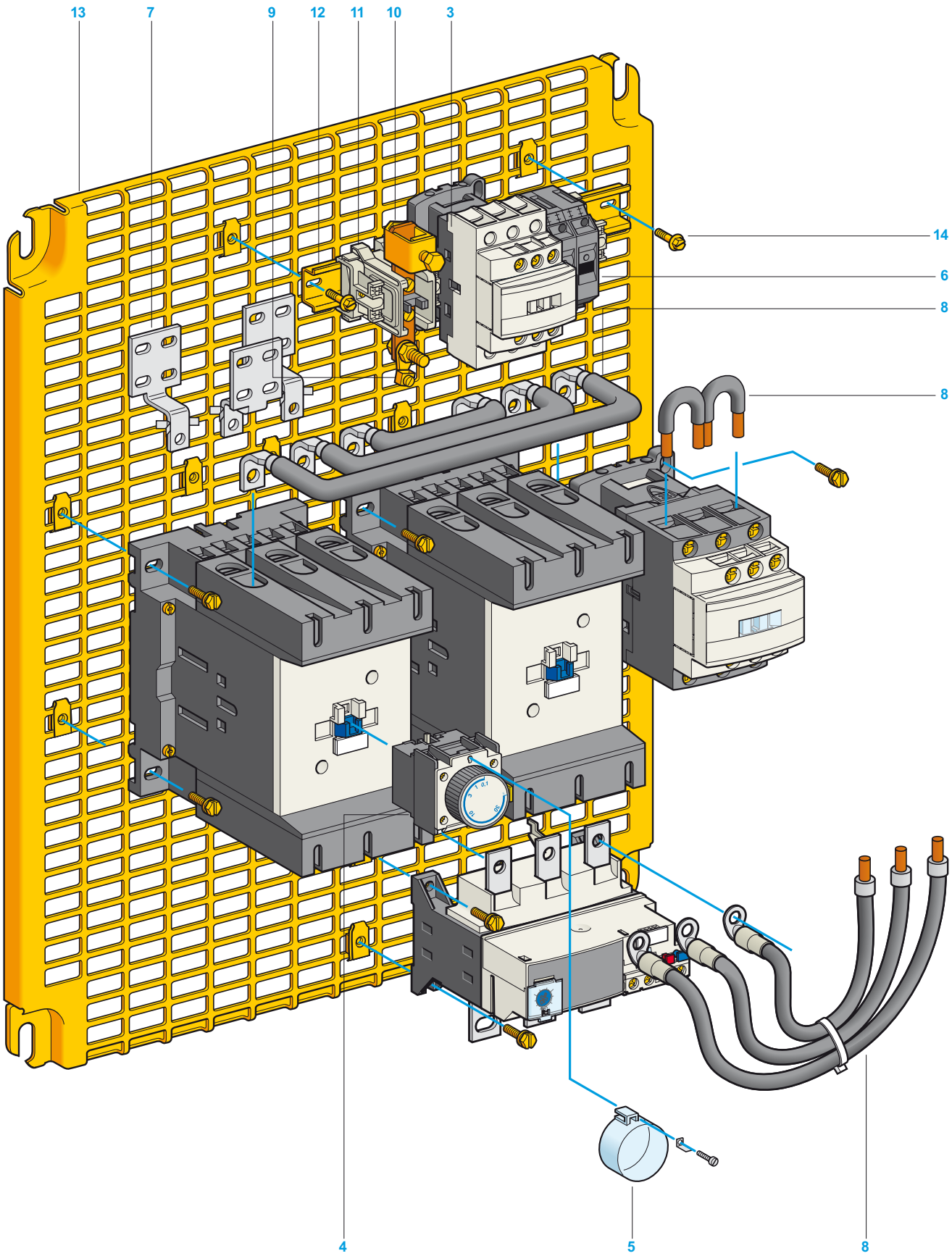
13
7
9
12
11
10
3
14
6
8
8
4
5
8

Motor starters - open version

Star-delta starters, for motor control, 7.5 to 132 kW (1), without mechanical interlock, for customer assembly (on plate or on mounting rail) (2)

Star-delta

Starters for mounting separately from upstream protection

Separate components (continued)

Description	Illustration item no.	For use on	No.	Sold in lots of	Unit reference	Weight kg
Instantaneous auxiliary contact blocks 1 N/O	1	D115 (star)	1	1	**LADN10**	0.020
Control relay	3	D115, D150	1	1	**CAD32** (3)	0.320
Time delay auxiliary contact blocks	4	D115, D150	1	1	**LADT2**	0.060
Lead sealing kit for time delay auxiliary contact blocks	5	D115, D150	1	1	**LA9D901**	0.005
Thermal magnetic circuit breaker for control circuit (200…415 V)	6	D115, D150	2	6	**GB2CB05**	0.060
Set of 3 connectors for wider terminations (optional)	7	D115, D150	1	1	**LA9FG980**	0.200
Set of power connections with fixing accessories	8	D115	1	1	**LA9D11517**	0.800
		D150	1	1	**LA9D15017**	1.050
Spare volt free terminals	9	D115, D150	1	10	**DZ3HA3**	0.007
			2	10	**DZ3GA3**	0.006
Lug-connector terminal block	10	D115, D150	1	10	**AB1BC9535**	0.236
End stop	11	D115, D150	3	100	**AB1AB8M35**	0.005
Mounting rail ⊔ 35 mm	12	D115, D150	1	10	**AM1ED021**	0.210
Pre-slotted mounting plate	13	D115, D150	1	1	**AM3PA65**	1.950
Screw with captive washer	14	D115, D150	12	100	**AF1VA618**	0.006
			2	100	**AF1VA410**	0.002

(1) Protection must be provided by the addition of a thermal overload relay, to be ordered separately. Select appropriate overload relay for setting at 0.58 of the full load rated motor current, see pages B11/4 and B11/5.

(2) For mounting, assembly and cabling: please refer to installation instructions supplied with the equipment.

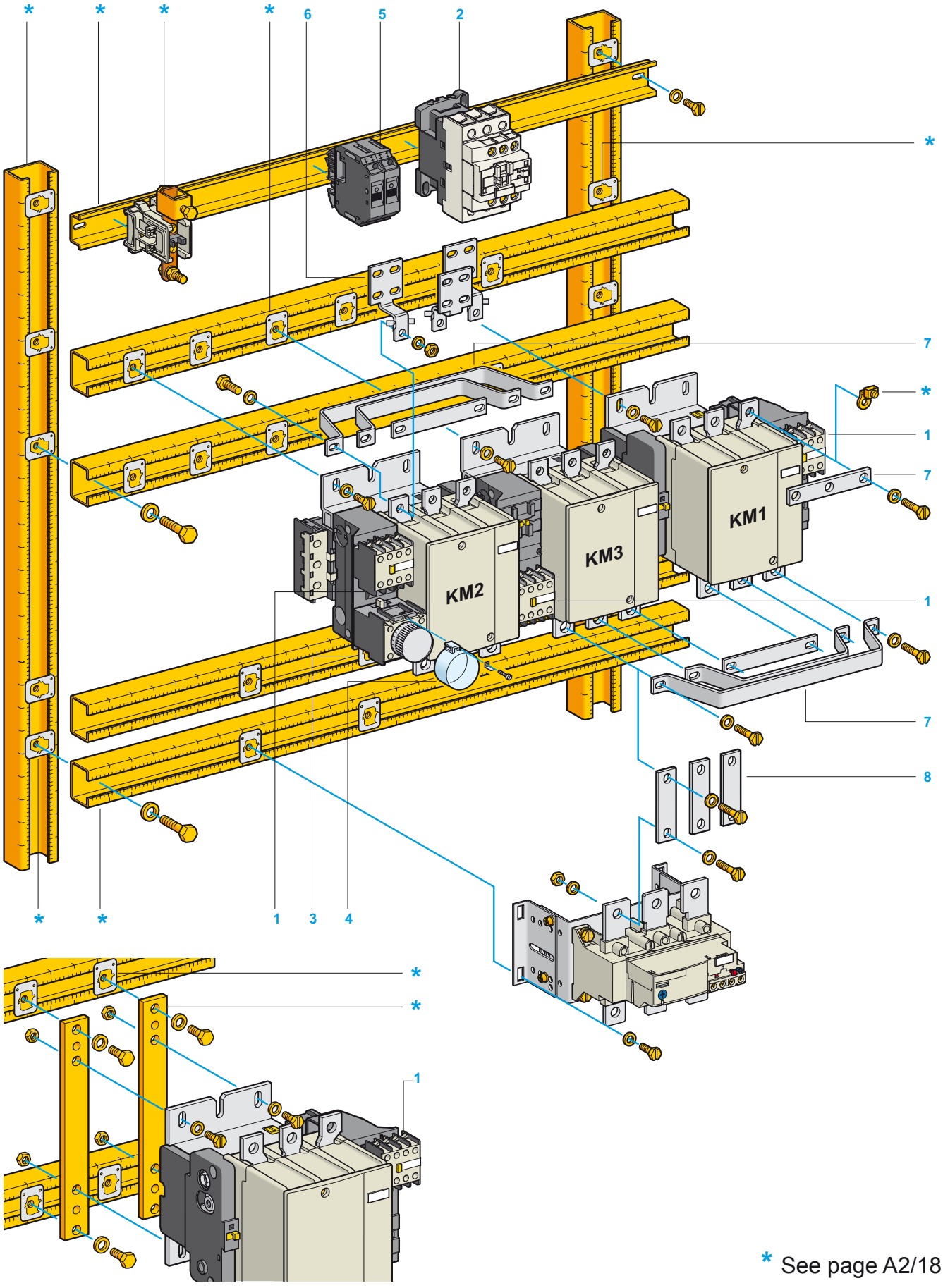

* See page A2/18

Motor starters - open version

Star-delta starters for motor control, 90 to 375 kW (1), for customer assembly (on chassis)

Star-delta

Contactors

Maximum operating rate: 12 starts/hour. Maximum starting time: 20 seconds (3)

Standard power ratings of squirrel cage motors				Contactors (2)			Separate components (see below)
220/ 230V	380/ 400V	415V	440V	line	delta	star	
kW	kW	kW	kW	KM2	KM3	KM1	Component types
90	160	160	185	**LC1F185●●**	**LC1F185●●**	**LC1D150●●**	F185
100	200	200	220	**LC1F225●●**	**LC1F225●●**	**LC1F185●●**	F225
110	220	220	250	**LC1F265●●**	**LC1F265●●**	**LC1F185●●**	F265
160	280	280	315	**LC1F330●●**	**LC1F330●●**	**LC1F265●●**	F330
185	315	355	375	**LC1F400●●**	**LC1F400●●**	**LC1F265●●**	F400

Separate components (4)

Description	Illustration item no.	For use on	No.	Sold in lots of	Unit reference	Weight kg
Instantaneous auxiliary contact blocks 2 N/O + 2 N/C	1	F185 to F400	3	1	**LADN22**	0.050
Control relay	2	F185 to F400	1	1	**CAD32**	0.580
Time delay auxiliary contact blocks	3	F185 to F400	1	1	**LADT2**	0.060
Sealing cover	4	F185 to F400	1	1	**LA9D901**	0.005
Thermal magnetic circuit breaker for 5 A control circuit	5	F185 to F400	2	6	**GB2CB10**	0.050
Sets of 3 connectors for wider terminations (optional)	6	F185	1	1	**LA9FG980**	0.200
		F225 to F400	1	1	**LA9FJ980**	0.490
Sets of power connections	7	F185	1	1	**LA9F18517**	0.800
		F225	1	1	**LA9F22510**	1.400
		F265	1	1	**LA9FH610**	1.400
		F330 and F400	1	1	**LA9FJ610**	1.500
Set of 3 busbars for thermal overload connections	8	F185 to F400	1	1	**LA7F●●●** (Selected according to size of thermal overload relay) see pages B11/11 and B11/12.	

(1) Protection must be provided by the addition of a thermal overload relay, to be ordered separately. Select appropriate overload relay for setting at 0.58 of the full load rated motor current, see pages B11/11 and B11/12.

(2) Contactors supplied with coil. Complete the reference by adding the control circuit voltage code.
Standard control circuit voltages (for other voltages, please consult your Regional Sales Office):

LC1D150

Volts	48	110	115	120	220	230	240	380	400	415
50/60 Hz	E7	F7	FE7	G7	M7	P7	U7	Q7	V7	N7

LC1F185 and F225

Volts	48	110	115	120	220	230	240	380	400	415
50 Hz (coil LX1)	E5	F5	FE5	–	M5	P5	U5	Q5	V5	N5
60 Hz (coil LX1)	E6	F6	–	G6	M6	–	U6	Q6	–	–

LC1F185 to F400

Volts	48	110	115	120	220	230	240	380	400	415
40… 400 Hz (5)	E7 (6)	F7	FE7	G7	M7	P7	U7	Q7	V7	N7

Standard voltages, see page B9/2.

For other voltages between 24 and 660 V, see pages B9/32 to B9/41.

(3) For longer starting times, please consult your Regional Sales Office.
(4) Other separate components, see page A2/19.
(5) Coil LX1: LC1F265, F330 and F400. Coil LX9: LC1F185 and F225.
(6) Except for LC1F400.

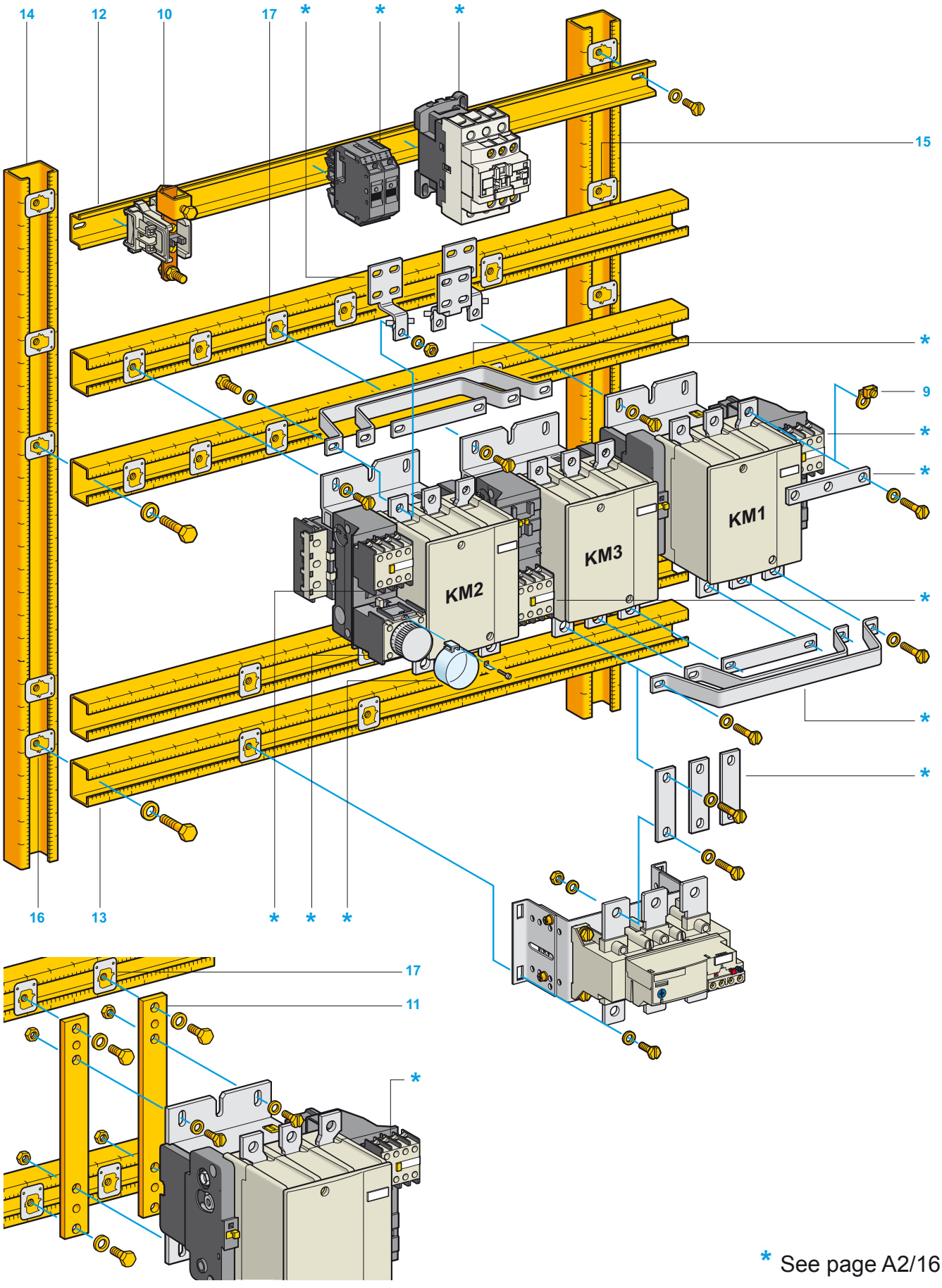

* See page A2/16

Motor starters - open version

Star-delta starters for motor control, 90 to 375 kW (1), for customer assembly (on chassis)

Separate components (continued from page A2/17)

Description	Illustration item no.	For use on	No.	Sold in lots of	Unit reference	Weight kg
Spare volt free terminals	9	F185	3	10	**DZ3GA3**	0.006
		F225…F400	3	10	**DZ3HA3**	0.007
Neutral terminals with stop and spare volt free terminal (for control circuit)	10	F185	1	10	**AB1BC9535**	0.236
			2	100	**AB1AB8P35**	0.006
			1	10	**DZ3HA3**	0.007
		F225 and F265	1	10	**AB1BC15035**	0.277
			2	100	**AB1AB8M35**	0.007
			1	10	**DZ3JA3**	0.010
		F330 and F400	1	10	**AB1BC24035**	0.287
			2	100	**AB1AB8M35**	0.007
			1	10	**DZ3JA3**	0.010
Reducer bracket	11	F400	2	1	**LA9F100**	0.100
Mounting rails (2)	12	F185…F400	1	10	**AM1DE200**	0.900
	13	F185…F400	1	4	**AM1EC200**	2.980
Uprights (2)	14	F115…F400	2	4	**AM1EC200**	2.980
1/4 turn sliding clip nuts and corresponding bolts for rails AM1 DE	15	F185…F400	2	10	**AF1CD061**	0.020
				100	**AF1VA618**	0.006
1/4 turn sliding clip nuts and corresponding bolts for rails AM1 DE	16	F185…F400	8	10	**AF1CD081**	0.020
				10	**AF1VC820**	0.024
1/4 turn sliding clip nuts and corresponding bolts for equipment fixing	17	F185…F330	15	10	**AF1CD061**	0.020
				100	**AF1VA618**	0.006
		F400	8	10	**AF1CD061**	0.020
				10	**AF1CD081**	0.020
				100	**AF1VA618**	0.006
				10	**AF1VC820**	0.024
			4	–	**25 x H6 screws** with washers	
Enclosures: metal, grey RAL 7032	–	F185…F225	1	1	**ACMGV763**	19.090
		F265	1	1	**ACMGV973**	33.310
		F330 and F400	1	1	**ACMGV1084**	54.000
Fixing lugs adjustable for enclosure ACM	–	–	4	4	**AE3FX122**	0.080

(1) Protection must be provided by the addition of a thermal overload relay, to be ordered separately. Select appropriate overload relay for setting at 0.58 of the full load rated motor current, see pages B11/11 and B11/12.
(2) Supplied in 2 m lengths. See page A2/30 for cutting to length.

Technical Data for Designers

Contents

Direct-on-line / Reversing starters..... A2/22 to A2/26
Star-delta starters ..... A2/27 to A2/31

Motor starters - open version

D.O.L. starters, plate mounted, for motor control 4 to 37 kW, with isolating device, pre-assembled

Dimensions

D.O.L. starters, plate mounted, pre-assembled

LC4 D09A...D25A

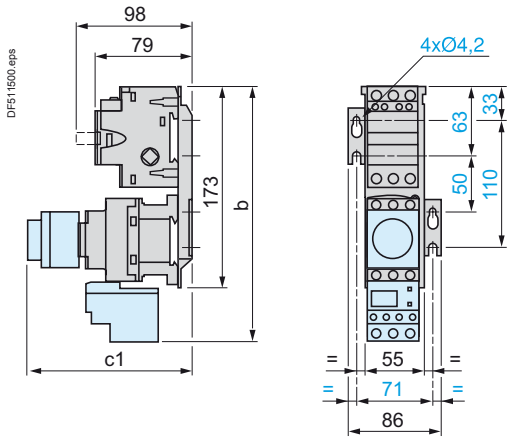

LC4		D09A...D18A	D25A
b		218	221
c1	without cover or add-on blocks	94	100
	with cover, without add-on blocks	96	102
	with LAD N or C (2 or 4 contacts)	127	133
	with LA6 DK10	139	145
	with LAD T, R, S	147	153
	with LAD T, R, S and sealing cover	151	157

LC4 D32A

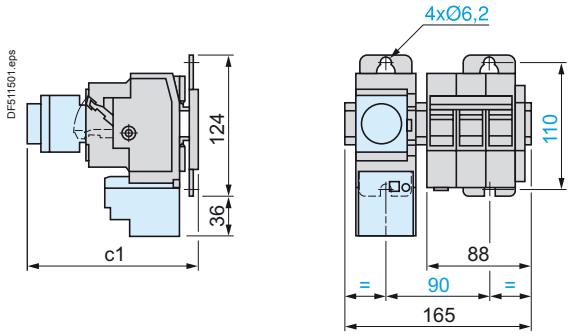

LC4		D32A
c1	without cover or add-on blocks	100
	with cover, without add-on blocks	102
	with LAD N or C (2 or 4 contacts)	133
	with LA6 DK10	145
	with LAD T, R, S	153
	with LAD T, R, S and sealing cover	157

LC4 D40...D80

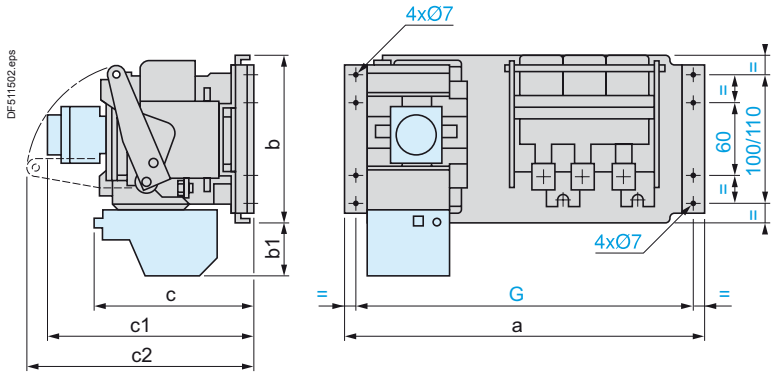

LC4		D40...D65	D80
a		281	311
b		143	143
b1		45	48
c		130	140
c1	without cover or add-on blocks	124	135
	with cover, without add-on blocks	129	140
	with LA1 DN (1 contact)	149	160
	with LAD N or C (2 or 4 contacts)	157	168
	with LA6 DK	169	180
	with LAD T, R, S	177	188
	with LAD T, R, S and sealing cover	181	192
c2		100	178
G		263	293

Scheme

D.O.L. starters

LC4 D09A to D80

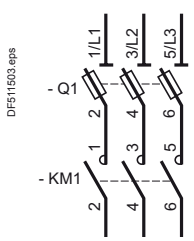

References:
page A2/3

Motor starters - open version
Combination automatic motor starters

Direct-on-line and reversing

GV2 ME●●K●●●

On mounting rail AM1 DE200

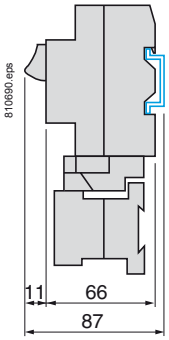

GV2 ME●●K1●●

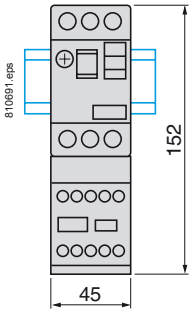

GV2 ME●●K2●●

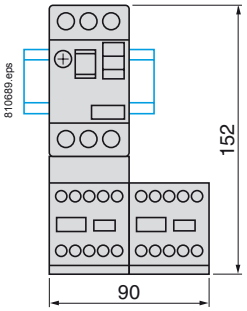

GV2 DM●●●●●

On mounting rail AM1 DE200

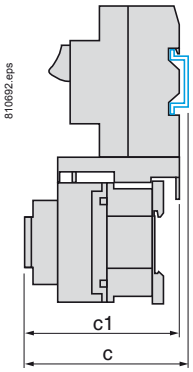

With adapter plate LAD 311

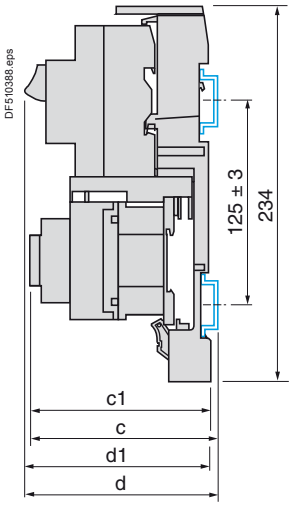

GV2 DM1●●●●

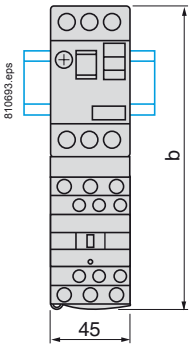

GV2	DM●02●● to DM●20●●	DM●21●● to DM●32●●
b	176.4	186.8
c	99.6	105.9
c1	94.1	100.4

GV2 DM2●●●●

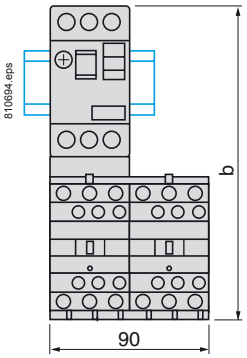

GV2	DM●02●● to DM●20●●	DM●21●● to DM●32●●
c	135.6	141.9
c1	130.1	136.4
d	112.5	112.5
d1	107	107

GV2 DP●●●●●

On mounting rail AM1 DE200

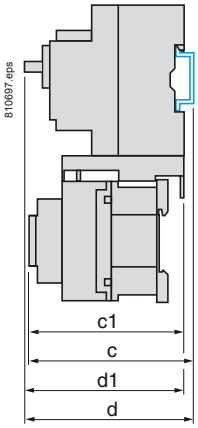

With adapter plate LAD 311

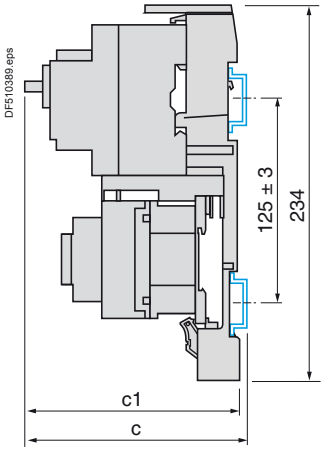

GV2 DP1●●●●

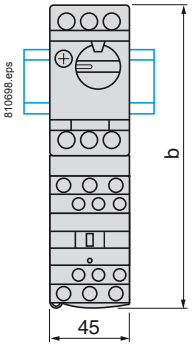

GV2	DP●02●● to DP●08●●	DP●10●● to DP●32●●
b	176.4	186.8
c	105.6	111.9
c1	100.1	106.4
d	100.5	100.5
d1	95	95

GV2 DP2●●●●

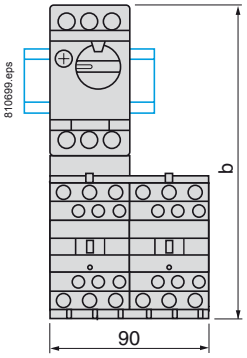

GV2	DP●02●● to DP●08●●	DP●10●● to DP●32●●
c	141.6	147.9
c1	136.5	142.4

References:
pages A2/4 to A2/9

Schemes:
pages A2/25 and A2/26

Motor starters - open version
Combination automatic motor starters

Direct-on-line and reversing

GV3 P●●1 + LC1 D40A…D65A (for customer assembly)

Vertical mounting (1)

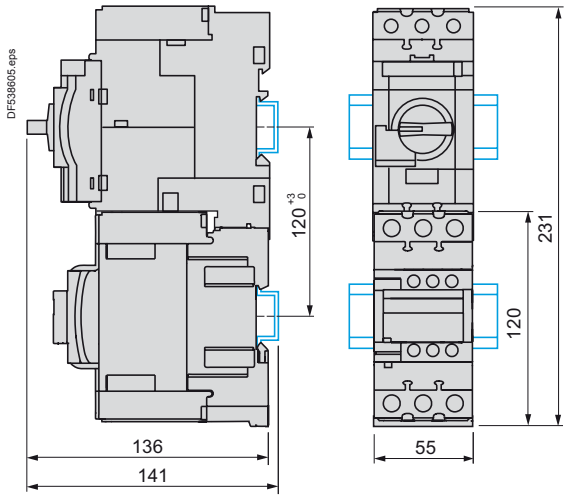

Side by side mounting with S-shape busbar system GV3 S (2)

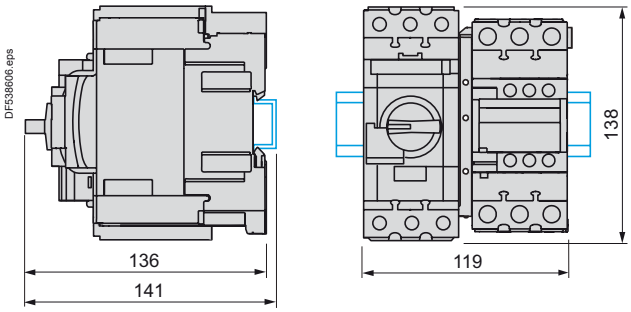

GV3 P●●1 + LC2 D40A…D65A (for customer assembly)

Vertical mounting (1)

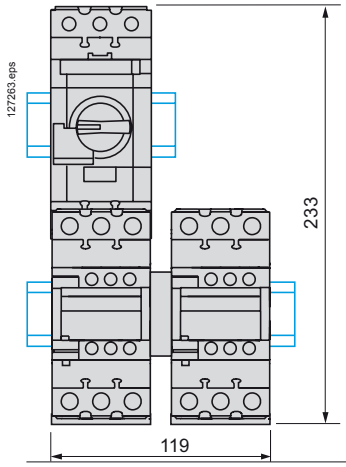

Side by side mounting with S-shape busbar system GV3 S (2)

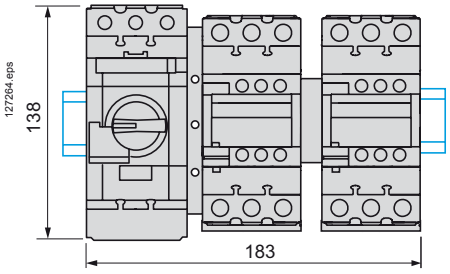

(1) For several side-by-side motor starters, the maximum current allowed is equal to the nominal current under 400 V. Example: 55 A for a 30 kW motor under 400 V, for a GV3 P65 circuit breaker and a LC1 D65A contactor association.
(2) The maximum current allowed is equal to 90 % of maximum current. Example: 45 A for a LC1 D50A contactor.

References: pages A2/8 and A2/9
Schemes: page A2/26

Motor starters - open version
Combination automatic motor starters

Direct-on-line and reversing

GV2 ME●●K1●●

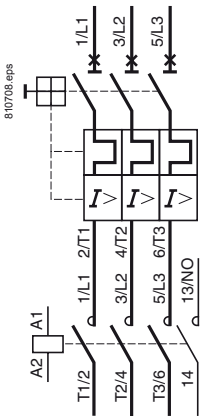

GV2 ME●●K2●●

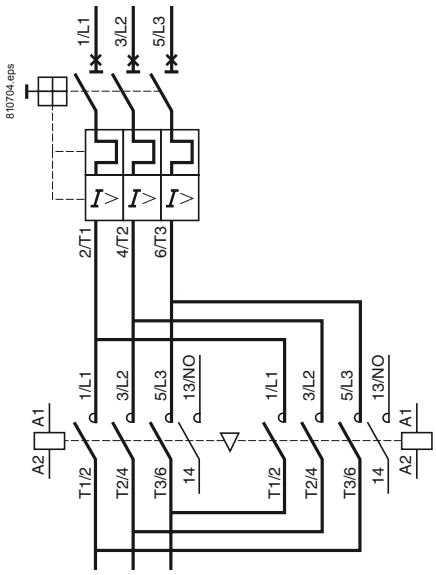

GV2 DM1●●●●

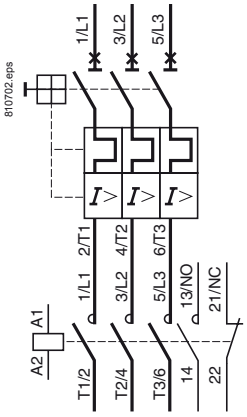

GV2 DM2●●●●

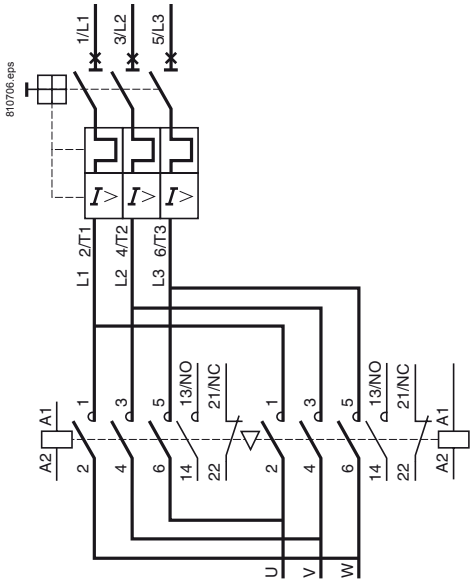

References:
pages A2/4 to A2/7

Dimensions:
page A2/23

Motor starters - open version
Combination automatic motor starters

Direct-on-line and reversing

GV2 DP1●●●●

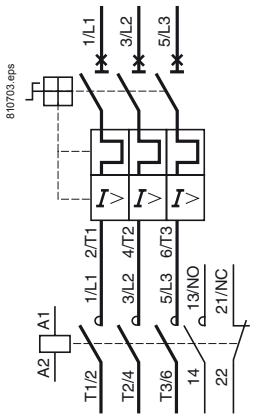

GV2 DP2●●●●

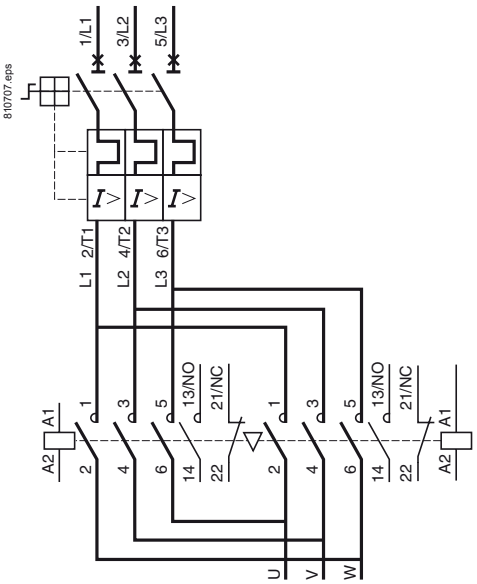

Mechanical interlock with integral electrical contacts

Control circuit ∿

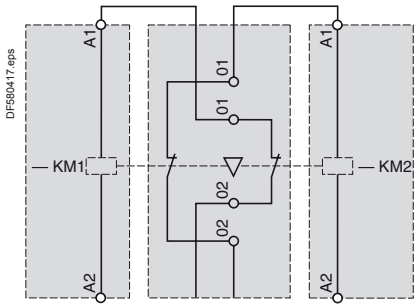

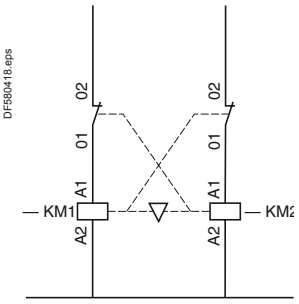

Control circuit ⎓

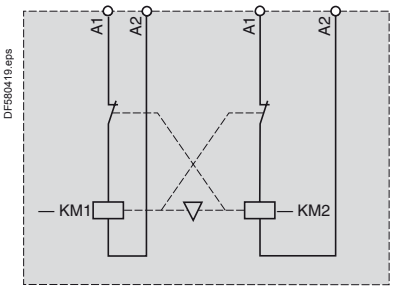

References:
pages A2/8 and A2/9

Dimensions:
pages A2/23 and A2/24

Motor starters - open version
Start-delta starters for motor control

Star-delta

Star-delta starting

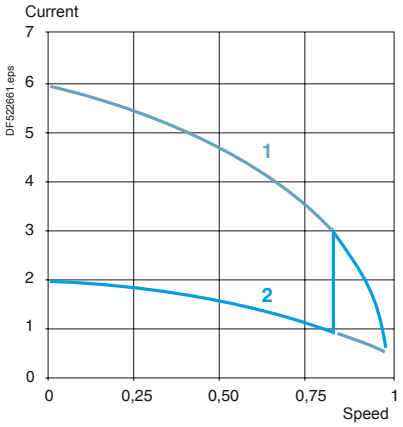

1 Starting in direct delta connection
2 Starting in star connection

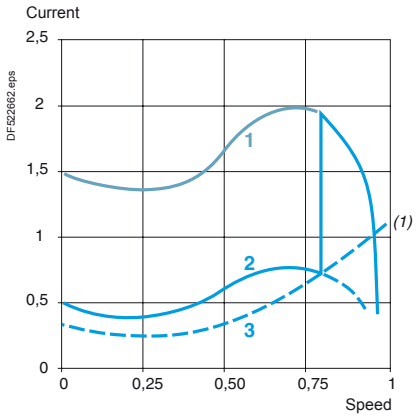

1 Starting in direct delta connection
2 Starting in star connection
3 Resistive torque of the machine

This method of starting is applicable to motors on which all 6 stator terminals are accessible and whose delta connection voltage corresponds to the mains voltage.

Star-delta starting should be used for motors starting on no-load or having a low load torque and gradual build-up:
- the starting torque in star connection is reduced to one third of the direct starting torque, i.e. about 50 % of the rated torque.
- the starting current in star connection is about 1.8 to 2.6 times the rated current.

The transition from star to delta connection must occur when the machine has run up to speed. A too rapid build-up in load torque would cause the stabilised run-up speed to be too low and would therefore eliminate any advantage in this method of starting: this is the case with certain machines whose load torque depends on the machine speed (a characteristic of centrifugal machines, for example).

All star-delta starters are supplied with a special LAD S2 or LA2 KT2● time delay relay which imposes a delay on the delta contactor during the transition period in order to allow the star contactor sufficient breaking time.

For ratings D115 and D150, this function is performed by a time delay auxiliary contact block LAD T2 and a control relay.

(1) Motor manufacturers generally specify machine load torques.
Example: maximum resistive torque on completion of star-delta start (expressed as a proportion of the rated torque).

References:
pages A2/10 to A2/19
Dimensions:
pages A2/28 to A2/31
Schemes:
pages A2/29 and A2/31

Motor starters - open version
Star-delta starters

Star-delta

Dimensions

Star-delta starters

Plate mounted, pre-assembled

LC3 K

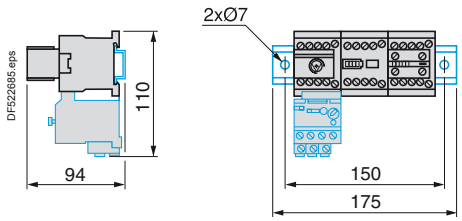

On starters LC3 D09A to D18A, a connection block is mounted on the upper part of contactor KM2, increasing the overall height of the product by 6.5 mm.

Pre-assembled:

LC3 D09A…D32A
For customer assembly: 3 x LC1 D with components D09 to D32

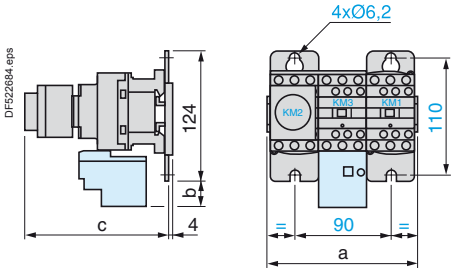

LC3		D09A	D12A	D18A	D32A
a		143	143	144	165
b		26.5	26.5	26.5	32.5
c	with LAD S	139	139	139	145
	with LAD S and sealing cover	143	143	143	149

Pre-assembled: LC3 D40, D50

For customer assembly: 3 x LC1 D with components D09 or D50

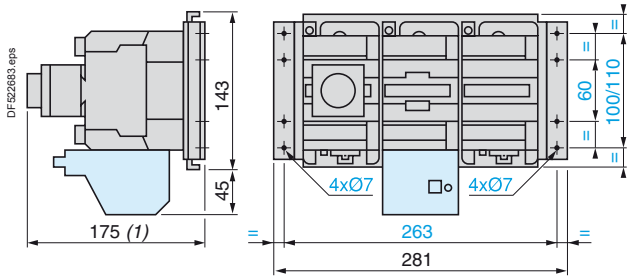

(1) +4 mm with sealing cover

Pre-assembled: LC3 D80

For customer assembly: 3 x LC1 D with components D80

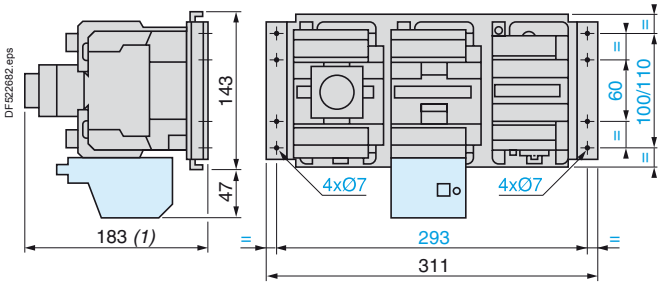

(1) +4 mm with sealing cover

Pre-assembled: LC3 D115, D150

For customer assembly: 3 x LC1 D with components D115 or D150

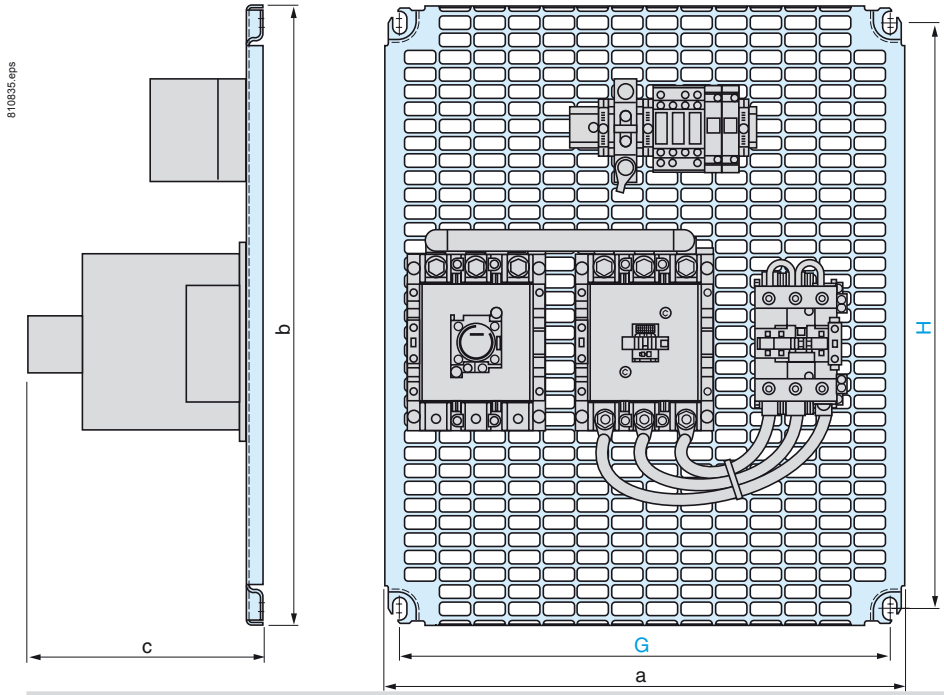

		a	b	c	G	H
LC3 D115 or 3 x LC1 D with components	D115	450	555	205	425	525
LC3 D150 or 3 x LC1 D with components	D150	450	555	205	425	525

References:
pages A2/10 to A2/15

Schemes:
page A2/29

Star-delta

Dimensions

Star-delta starters

On mounting rail AM1 DP, pre-assembled

LC3 D090A à D320A

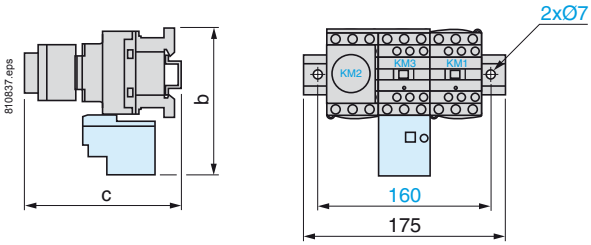

LC3		D090A à D180A	D320A
b		153	137
c	with LAD S	139	145
	with LAD S and sealing cover	143	149

Schemes

LC3 K, LC3 D09A to D80
LC3 D090A to D320A

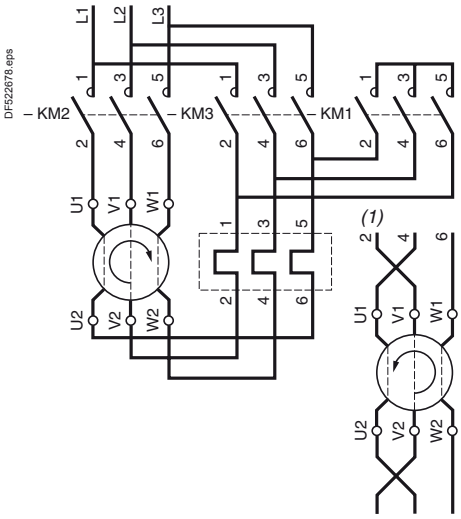

LC3 K

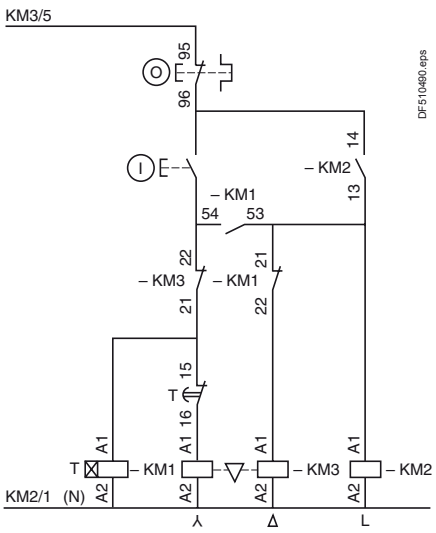

LC3 D

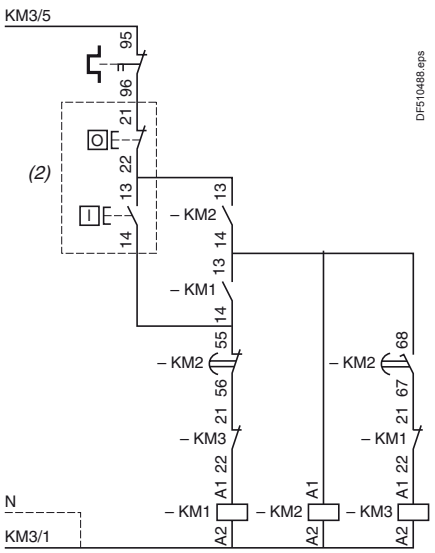

Note: LC3 D09A to D18A: Mechanical interlock between KM3 and KM1.

LC3 D115 and D150

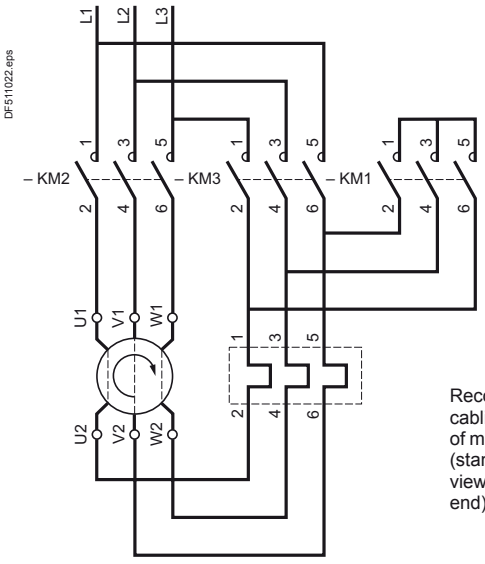

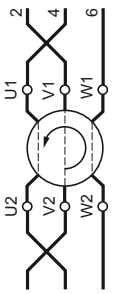

Recommended cabling for reversal of motor rotation (standard motor, viewed from shaft end).

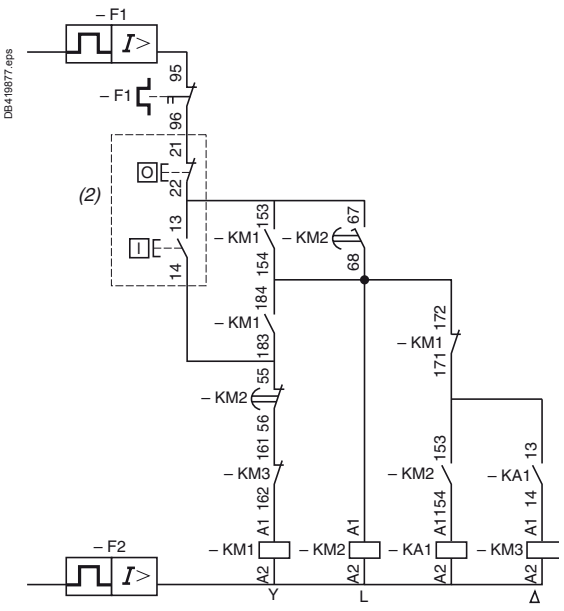

(1) Recommended cabling for reversal of motor rotation (standard motor, viewed from shaft end).
(2) Remote control.

References:
pages A2/10 to A2/15

Motor starters - open version
Star-delta starters

Star-delta

Dimensions
Chassis mounted starters

Pre-assembled: **LC3 F185** to **LC3 F400**
For customer assembly: **2** x **LC1 F●●●** and **1** x **LC1 D150** or **3** x **LC1 F●●●**

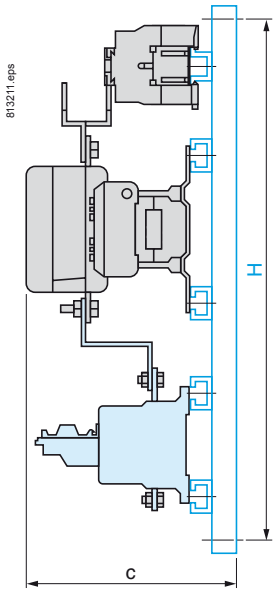

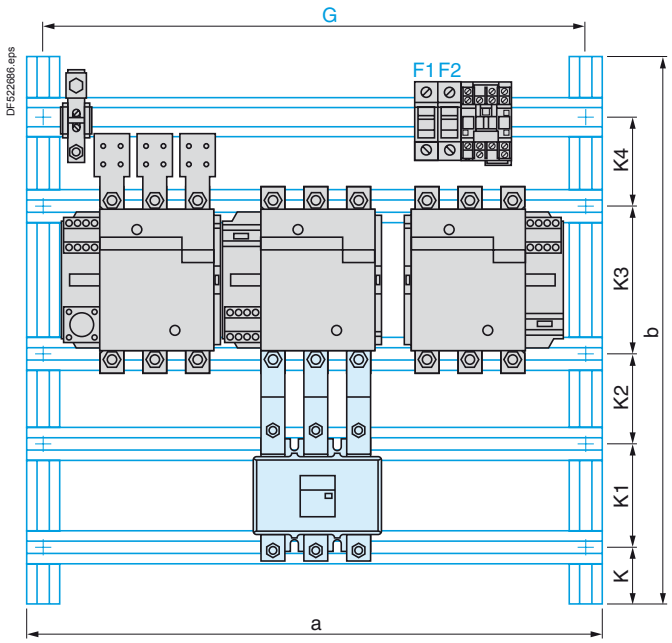

	a	b	c	G	H	K	K1	K2	K3	K4
LC3 F185 or **2 x LC1 F●●● + 1 x LC1 D** with components F185	565	675	235	525	625	160	110	80	110	80
LC3 F225 or **3 x LC1 F●●●** with components F225	565	675	235	525	625	160	110	80	110	80
LC3 F265 or **3 x LC1 F●●●** with components F265	665	775	266	625	725	165	110	100	110	110
LC3 F330 or **3 x LC1 F●●●** with components F330	765	975	276	725	825	195	140	100	110	180
LC3 F400 or **3 x LC1 F●●●** with components F400	765	975	276	725	925	195	140	100	180	110

Presentation:
page A2/27

References:
pages A2/11, A2/16 to A2/19

Motor starters - open version
Star-delta starters

Star-delta

Schemes
Star-delta starters
LC3 F185 to F400

DF511022.eps

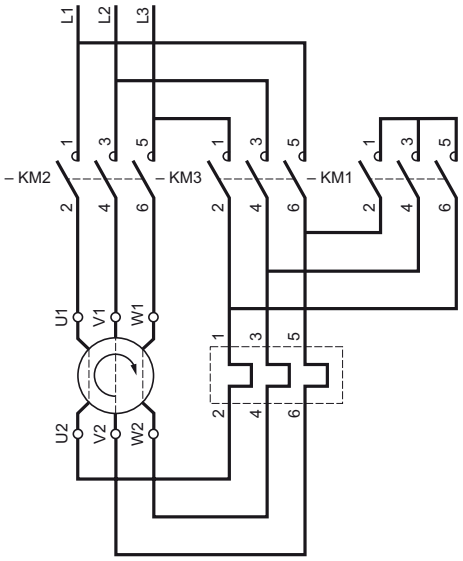

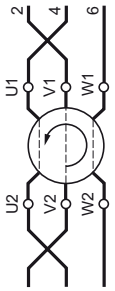

Recommended cabling for reversal of motor rotation (standard motor, viewed from shaft end).

DB419878.eps

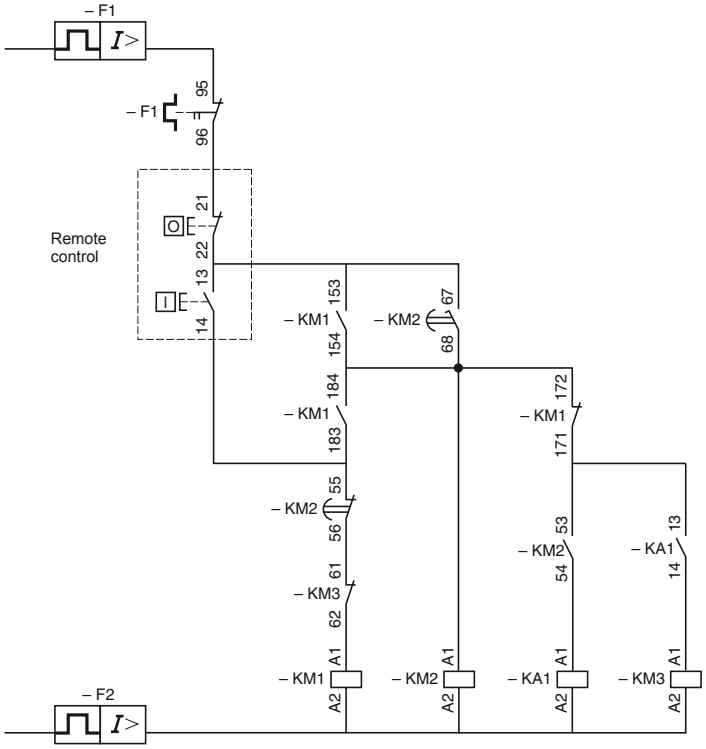

Open pre-cabled motor starters

Presentation:
page A2/27

References:
pages A2/11, A2/16 to A2/19

Ultra-compact starters TeSys H

Presentation A3/2

Ultra-compact 22.5 mm motor starters - TeSys H

Type of product	Range		Page
Ultra compact starters IEC ratings Standard starters, screw or spring terminals, direct-on-line or reverse	Up to **3 kW** AC53a Up to **9 A** AC51		A3/6
Safety starters, screw or spring terminals, direct-on-line or reverse			
Ultra compact starters UL ratings Standard starters, screw or spring terminals, direct-on-line or reverse	Up to **3 hp** AC53a Up to **9 A** AC51		A3/7
Safety starters, screw or spring terminals, direct-on-line or reverse			
Circuit breakers for a group of starters Selection of magnetic motor circuit breakers GV2L – rotary knob GV2LE – rocker lever	Up to **32 A**		A3/8

Technical Data for Designers A3/9

Ultra-compact starters
TeSys H

The most compact 3 KW / 400 V starter in the world



Up to 75 % of space reduction

- Ultra-compact 22.5 mm starter
- Reversing starter in the same width
- Maximum space savings for group starter architecture

Long electrical durability

- Suitable for high demanding application
- 30 000 000 of AC53a electrical cycles

> With printed QR code, refering directly to the product data sheet.

Easy Design

- Wide range setting motor protection
- Automatic, manual or remote reset after thermal trip
- Wide range of control voltage

Easy to integrate

- Direct mounting installation on DIN rail
- Control terminals on the upper side
- Power terminal on the lower side

Ultra-compact starters
TeSys H

Standard version

- 2 ratings:
  - 2.4 A 400 V AC53a
  - 6.5 A 400 V AC53a
- 2 control voltages:
  - 24 V DC
  - 110 V / 230 V AC
- 2 terminal types:
  - Screw clamps
  - Spring
- Can provide up to 3 functions:
  - Forward running
  - Reverse running
  - Overload protection









Safety version

- Safe Torque Off embedded:
  - SIL3 according to IEC61508-1
  - Ple according to ISO13849-1
- ATEX:
  - As associated devices for motor protection

> TeSys H is a solution dedicated to low footprint applications, in industries as food and beverage, logistics, and durable goods.



Ultra-compact starters
TeSys H

Conventional ..... OR ..... TeSys H standard solutions



Direct-on-line



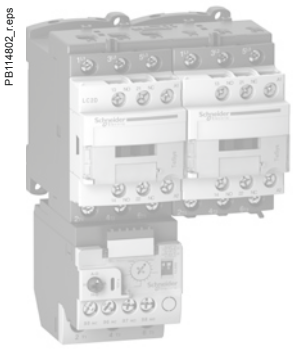

Reverse



> How does the hybrid technology work ?

Hybrid technology:

Each contact is coupled with a power semiconductor for switching

> Higher number of on/off switches, extended durability.

> Closing

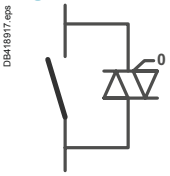



Start: conduction through the semiconductor.



Contact closure under zero voltage. No electrical arc: the contact is preserved.

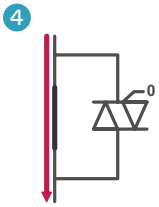

The semiconductor is non-conducting.

> Opening

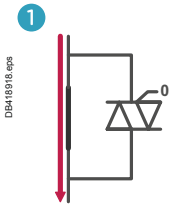

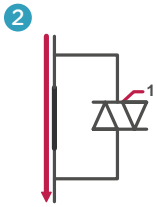

Before the opening of the contact the semiconductor is triggered.

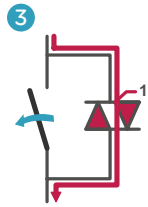

Contact opening:
- no arc: the contact is preserved.

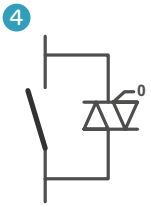

Stop: the semiconductor becomes non-conducting.

Ultra-compact starters
TeSys H

Conventional ..... OR ..... TeSys H safety solutions

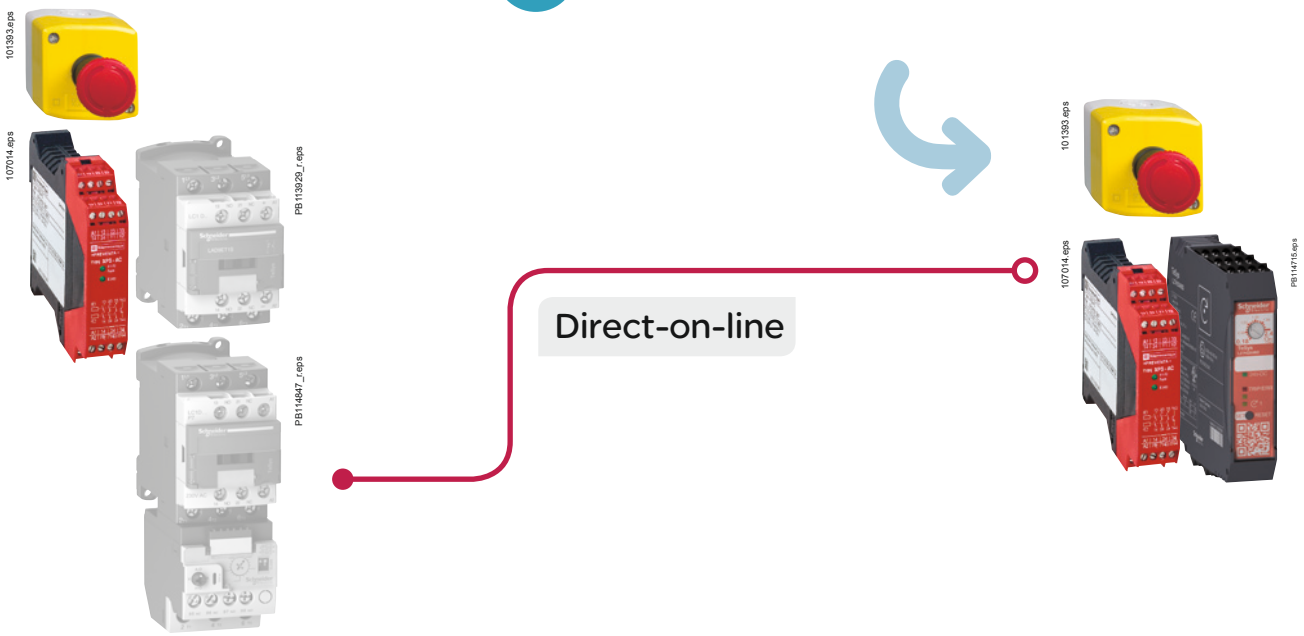

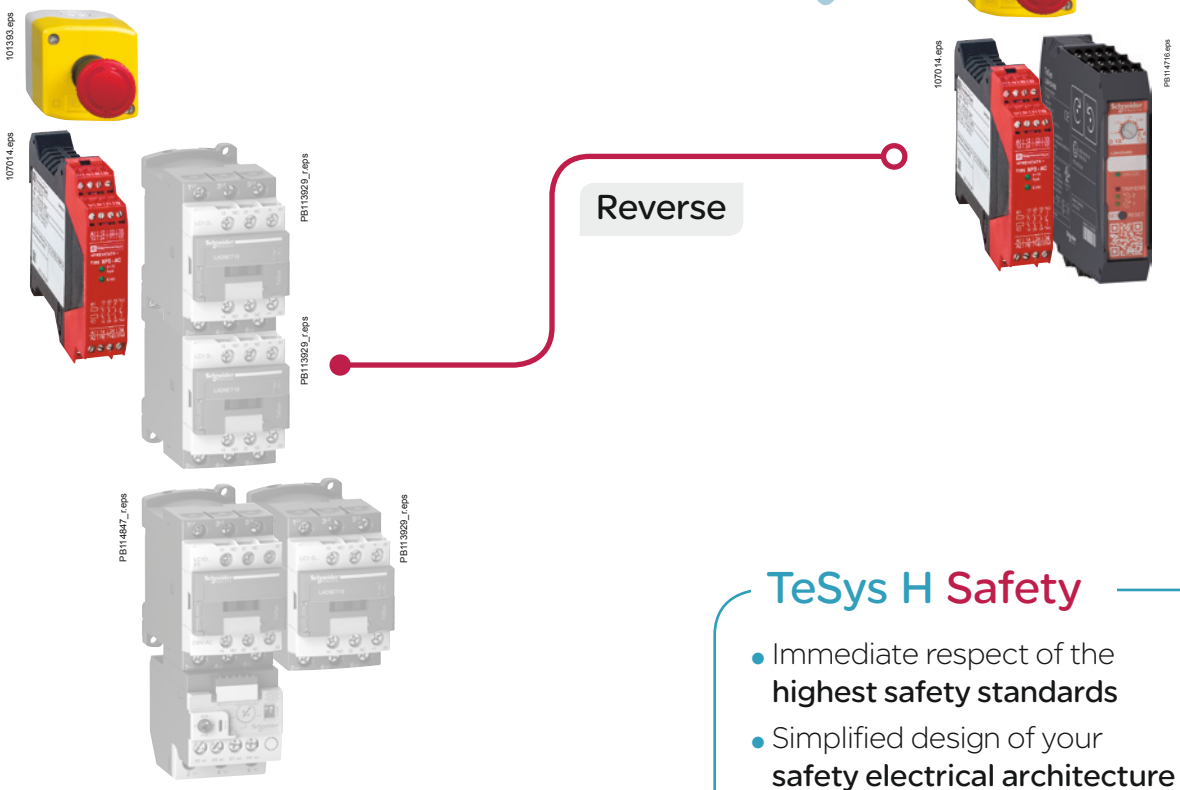

TeSys H Safety

- Immediate respect of the **highest safety standards**
- Simplified design of your **safety electrical architecture**
- **Quicker** panel implementation

Ultra-compact starters
TeSys H Standard - Safety
IEC ratings

PB114711_r.eps



LZ1H2X4BD

Starters for asynchronous motors - AC53a utilization category:

Standard starters TeSys H

Starters	3- phases motor: max power (KW) for various voltage							Current range	Commercial references (1)
	220 V	230 V	380 V	400 V	415 V	440 V	500 V	A	
Direct-on-line									
Screw terminals	0.37	0.37	0.75	0.75	0.75	0.75	1.1	0.18...2.4	**LZ1H2X4●●**
	1.5	1.5	2.2	3	3	3	3	1.5...6.5	**LZ1H6X5●●**
Spring terminals	0.37	0.37	0.75	0.75	0.75	0.75	1.1	0.18...2.4	**LZ1H2X43●●**
	1.5	1.5	2.2	3	3	3	3	1.5...6.5	**LZ1H6X53●●**
Reverse									
Screw terminals	0.37	0.37	0.75	0.75	0.75	0.75	1.1	0.18...2.4	**LZ2H2X4●●**
	1.5	1.5	2.2	3	3	3	3	1.5...6.5	**LZ2H6X5●●**
Spring terminals	0.37	0.37	0.75	0.75	0.75	0.75	1.1	0.18...2.4	**LZ2H2X43●●**
	1.5	1.5	2.2	3	3	3	3	1.5...6.5	**LZ2H6X53●●**

(1) Remplace the ●● in the reference by the bobine code: BD (24 V DC) or FU (110-230 V AC).

PB114715_r.eps



LZ7H2X4BD

Safety starters TeSys H

Starters	3- phases motor: max power (KW) for different tensions							Current range	Commercial references (1)
	220 V	230 V	380 V	400 V	415 V	440 V	500 V	A	
Direct-on-line									
Screw terminals	0.37	0.37	0.75	0.75	0.75	0.75	1.1	0.18...2.4	**LZ7H2X4●●**
	1.5	1.5	2.2	3	3	3	3	1.5...6.5	**LZ7H6X5●●**
Spring terminals	0.37	0.37	0.75	0.75	0.75	0.75	1.1	0.18...2.4	**LZ7H2X43●●**
	1.5	1.5	2.2	3	3	3	3	1.5...6.5	**LZ7H6X53●●**
Reverse									
Screw terminals	0.37	0.37	0.75	0.75	0.75	0.75	1.1	0.18...2.4	**LZ8H2X4●●**
	1.5	1.5	2.2	3	3	3	3	1.5...6.5	**LZ8H6X5●●**
Spring terminals	0.37	0.37	0.75	0.75	0.75	0.75	1.1	0.18...2.4	**LZ8H2X43●●**
	1.5	1.5	2.2	3	3	3	3	1.5...6.5	**LZ8H6X53●●**

(1) Remplace the ●● in the reference by the bobine code: BD (24 V DC) or FU (110-230 V AC).

Starters for resistive load AC51 utilization category:

Starters	Resistive load current	Application	Commercial references (1)
	A		
Screw terminals	2.4	Standard	**LZ1H2X4●●**
		Safety	**LZ7H2X4●●**
	9	Standard	**LZ1H6X5●●**
		Safety	**LZ7H6X5●●**
Spring terminals	2.4	Standard	**LZ1H2X43●●**
		Safety	**LZ7H2X43●●**
	9	Standard	**LZ1H6X53●●**
		Safety	**LZ7H6X53●●**

(1) Remplace the ●● in the reference by the bobine code: BD (24 V DC) or FU (110-230 V AC).

Ultra-compact starters
TeSys H Standard - Safety
UL ratings

Starters for asynchronous motors - AC53a utilization category:



LZ1H2X4BD

Standard starters TeSys H

Starters	3- phases motor in HP			Current range	Commercial references (1)
	208 V	220 V - 240 V	440 V - 480 V	A	
Direct-on-line					
Screw terminals	1/2	1/2	1	0.18...2.4	**LZ1H2X4●●**
	1	1.5	3	1.5...6.5	**LZ1H6X5●●**
Spring terminals	1/2	1/2	1	0.18...2.4	**LZ1H2X43●●**
	1	1.5	3	1.5...6.5	**LZ1H6X53●●**
Reverse					
Screw terminals	1/2	1/2	1	0.18...2.4	**LZ2H2X4●●**
	1	1.5	3	1.5...6.5	**LZ2H6X5●●**
Spring terminals	1/2	1/2	1	0.18...2.4	**LZ2H2X43●●**
	1	1.5	3	1.5...6.5	**LZ2H6X53●●**

(1) Remplace the ●● in the reference by the bobine code: BD (24 V DC) or FU (110-230 V AC).



LZ8H2X4BD

Safety starters TeSys H

Starters	3- phases motor in HP			Current range	Commercial references (1)
	208 V	220 V - 240 V	440 V - 480 V	A	
Direct-on-line					
Screw terminals	1/2	1/2	1	0.18...2.4	**LZ7H2X4●●**
	1	1.5	3	1.5...6.5	**LZ7H6X5●●**
Spring terminals	1/2	1/2	1	0.18...2.4	**LZ7H2X43●●**
	1	1.5	3	1.5...6.5	**LZ7H6X53●●**
Reverse					
Screw terminals	1/2	1/2	1	0.18...2.4	**LZ8H2X4●●**
	1	1.5	3	1.5...6.5	**LZ8H6X5●●**
Spring terminals	1/2	1/2	1	0.18...2.4	**LZ8H2X43●●**
	1	1.5	3	1.5...6.5	**LZ8H6X53●●**

(1) Remplace the ●● in the reference by the bobine code: BD (24 V DC) or FU (110-230 V AC).

Starters for resistive load AC51 utilization category:

Starters	Resistive load current	Application	Commercial references (1)
	A		
Screw terminals	2.4	Standard	**LZ1H2X4●●**
		Safety	**LZ7H2X4●●**
	9	Standard	**LZ1H6X5●●**
		Safety	**LZ7H6X5●●**
Spring terminals	2.4	Standard	**LZ1H2X43●●**
		Safety	**LZ7H2X43●●**
	9	Standard	**LZ1H6X53●●**
		Safety	**LZ7H6X53●●**

(1) Remplace the ●● in the reference by the bobine code: BD (24 V DC) or FU (110-230 V AC).

Ultra-compact starters
Circuit breaker selection for a group of starters



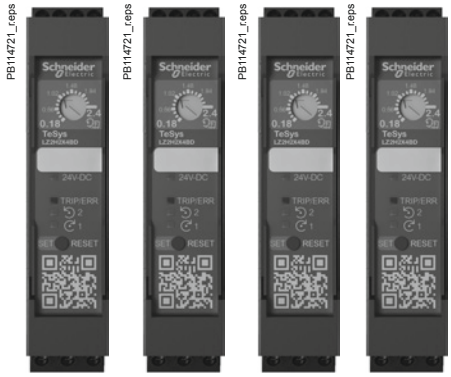

GV2L + LZ2H2X4BD

Magnetic motor circuit breakers:
- GV2L: rotary knob type - Ue = 500 V
- GV2LE: rocker lever type - Ue = 415 V.

Selection of the circuit breaker
Type 1 coordination according to IEC/EN 60947-4-2

Max	Iq	Number of TeSys H		Reference Circuit breaker	
		2.4 A	6.5 A	Rotary	Rocker
A	kA				
0.4	50.0	1	1	**GV2L03**	**GV2LE03**
0.63	50.0	1	1	**GV2L04**	**GV2LE04**
1	50.0	1	1	**GV2L05**	**GV2LE05**
1.6	50.0	1	1	**GV2L06**	**GV2LE06**
2.5	35.0	1	1	**GV2L07**	**GV2LE07**
4	12.5	1	1	**GV2L08**	**GV2LE08**
6.3	8.0	2	1	**GV2L10**	**GV2LE10**
10	7.0	4	1	**GV2L14**	**GV2LE14**
14	5.0	5	2	**GV2L16**	**GV2LE16**
18	4.0	7	2	**GV2L20**	**GV2LE20**
25	4.0	10	3	**GV2L22**	**GV2LE22**
32	3.0	13	4	**GV2L32**	**GV2LE32**

TeSys H

Technical Data for Designers

Contents

Description ..... A3/10 to A3/11
Characteristics ..... A3/12 to A3/15
Dimensions and schemes A3/16

Ultra-compact starters
TeSys H

Identification of terminals / Indicators / Setting means and procedure

Setting procedure

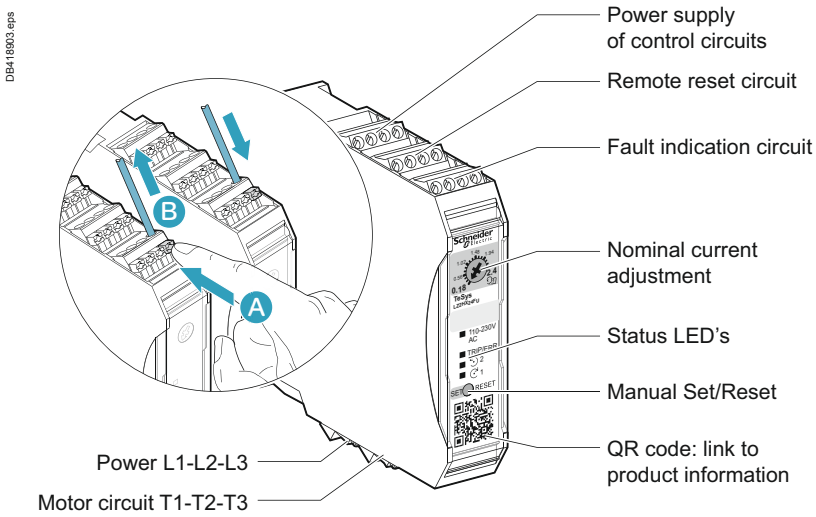

STEP	ACTION
1	Lift the cover on the front of the TeSys H motor starter to access the SET/RESET button.
2	Press and hold down the SET/RESET button for at least 6 seconds. After 6 seconds the 110-230 V AC or 24 V DC LED flashes once.
3	After the LED has flashed once, release the SET/RESET button.
4	Turn the potentiometer to select a nominal current, and then fine-tune the position until the LEDs indicate the exact nominal current.
5	Press the SET/RESET button to save the selected nominal current. The 110-230 V AC or 24 V DC LED comes on and the other LEDs go off.
6	Drop the cover back over the front of the TeSys H motor starter.

Protection functions

The protection of three - phase motors is ensured against potential faults

- Thermal overload: the motor currents exceed the set value.
- Phase unbalanced: the motor currents differ from each other by more than 33 %
- Phase loss: power missing on one or several phases
- Stall and jam: motor current exceeding 45 A for more that 2 s during starting or running phase - No motor is connected - Motor current is lower that the minimum configurable current for more than 2 seconds, on at least two phases.

For all this detected situations, the TeSys H motor starter will switch off, activate its TRP/ERR LED and fault signaling contact.

Please refer to the “Instruction sheet and User Guide” for more information.

Ultra-compact starters
TeSys H

Electrical diagrams for Safety chain applications

Preferred

Electrical life time: 30000000 AC53a electrical cycles

Safety Chain Application for Monitoring Emergency STOP Circuits with Two Channel Inputs and Two Channel Outputs with Preventa XPSAF Safety Processing Device.

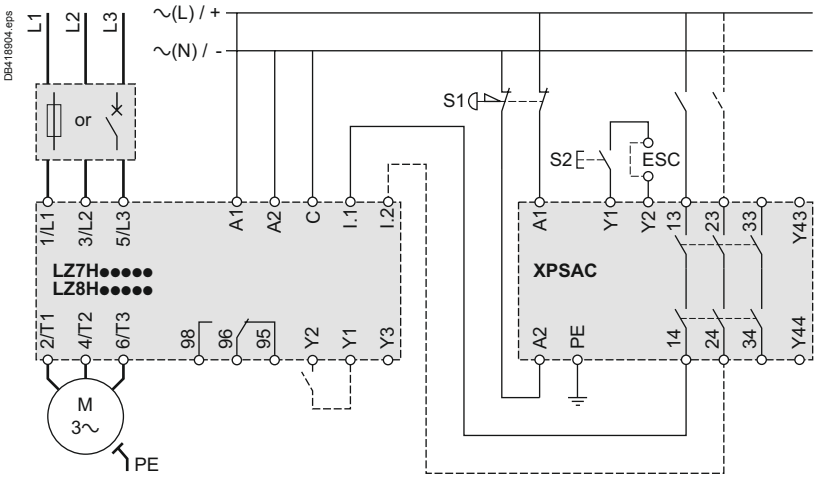

Possible but non- recommended

Electrical life time: 10000 AC53 a electrical cycles

Safety Chain Application for Monitoring Emergency Stop Circuits with Two Channel Inputs and Two Channel Outputs with Preventa XPSAC Safety Processing Device.

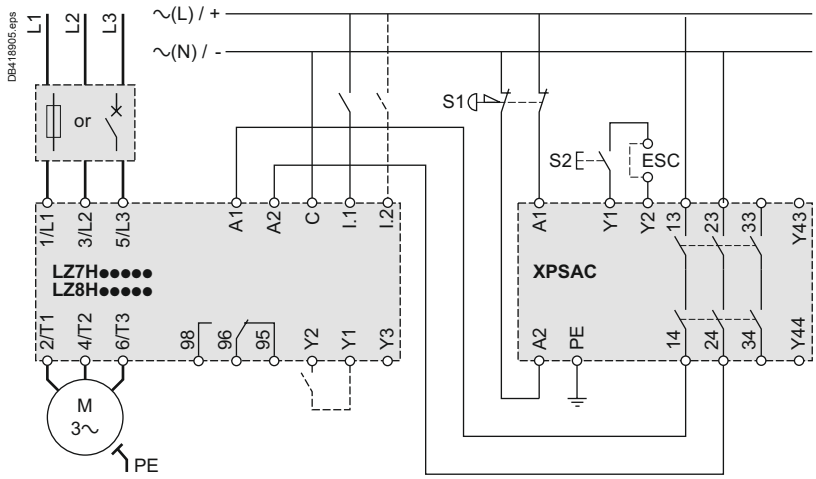

Ultra-compact starters
TeSys H

Environment

Rated insulation voltage (Ui)	Conforming to IEC/EN 60947-1, overvoltage category III, degree of pollution: 2	**V**	500
Rated impulse withstand voltage (Uimp)	Conforming to IEC/EN 60947-4-2	**kV**	6 (24 V DC control voltage); 4 (110 V - 230 V AC control voltage)
Conforming to standards			IEC / EN 60947-4-2
Product certifications			CE, CUL, ATEX (for failsafe product), CCC (on going)
Degree of protection	Conforming to IEC / EN 60947-1		IP20
Environment category	Conforming to IEC / EN 60947-1		E
Protective treatment	Conforming to IEC/EN 60068-2-30		"TC"
Ambient air temperature around the device	Storage	**°C**	-40…+80
	Operation (see derating curves)	**°C**	-25…+70
Maximum operating altitude	without derating	**m**	2000
	with derating	**m**	No
Operating positions (see derating curves)	Vertical axis (horizontal DIN rail)		Yes
	Horizontal axis (vertical DIN rail)		Not authorised
Shock resistance 1/2 sine wave = 18 ms	Conforming to IEC/EN 60068-2-27	**gn**	30 Starter OFF
		gn	30 Starter ON
Vibration resistance 10…150 Hz	Conforming to IEC/EN 60068-2-6	**gn**	5 Starter OFF
		gn	5 Starter ON
Resistance to electrostatic discharge	Conforming to IEC/EN 61000-4-2	**kV**	Air discharge: 8 kV
		kV	Contact discharge: 6 kV
Immunity to radiated high-frequency disturbance	Conforming to IEC/EN 61000-4-3		
	80 - 1 GHz	**V/m**	20
	1.0 - 6 GHz	**V/m**	10
Immunity to fast transient currents	Conforming to IEC/EN 61000-4-4	**kV**	3
Immunity to conducted high frequency disturbances	Conforming to IEC/EN 61000-4-6	**V**	10
Radiated emission and conducted	Conforming to CISPR 11 and EN 55011		Class A
Surge	Conforming to IEC/EN 61000-4-5	**kV**	1 symmetrical
		kV	2 asymmetrical

Control circuit characteristics

Rated voltage	∿ 50/60 Hz	**V**	110 - 230
	⎓	**V**	24
Voltage limits	∿ 50/60 Hz	**V**	85…253
	⎓	**V**	19.2…30
Voltage dips		**ms**	3
Short time interruptions		**ms**	3

Power circuit characteristics

			LZ●2X4●●	LZ●6X5●●
Power disipation for corresponding Rated Operating Current (see derating curve)		**W**	0.88 … 4.1	0.88 … 7
Rated Operating Current	AC51 conforming to IEC/EN 60947-4-3	**A**	0.18 - 2.4	1.5 - 9
	AC53a conforming to IEC/EN 60947-4-2	**A**	0.18 - 2.4	1.5 - 6.5
Electrical life	AC51	**Op**	30 000 000 (1)	
		Op	10 000 (2)	
	AC53A	**Op**	30 000 000 (1)	
		Op	10 000 (2)	
Maximum Operating rate	AC51	**Op/h**	7200	
	AC53A		See curves	
Time to restart after overload trip	Manual or remote mode	**mn**	2	
	Automatic	**mn**	20	

Power and control terminal Characteristics

	Terminal type		Screw M3	Push in
Flexible cable without cable end	1 conductor	**mm²**	0.25…2.5	0.25…2.5
	2 conductors	**mm²**	0.25…0.75	
Flexible cable with cable end	1 conductor	**mm²**	0.25…2.5	0.25…2.5
	2 conductors	**mm²**	0.25…1.5	0.25…1.5
Solid cable without cable end	1 conductor	**mm²**	0.25…2.5	0.25…2.5
	2 conductors	**mm²**	0.25…0.75	
Screwdriver		**mm**	flat screwdriver: 3 mm	
Tightening torque		**N.m**	0.5..0.6	

(1) With ON/OFF control through control inputs (I_1, I_2 terminals) *(2) With ON/OFF control through power supply (A_1, A_2 terminals).*

Ultra-compact starters
TeSys H

System conditons			
Database for failure rates		SN 29500	
System type		Type B	
Standard used		IEC 61508	
Beta factor		1 %	
Mean time to failure (MTTF) at an ambient temperature 40 °C		39.3 (LZ7H or LZ8H 24 V DC) 39.1 (LZ7H or LZ8H 110/230 V AC)	
Safe torque-off			
		LZ7H or LZ8H 24 V DC	**LZ7H or LZ8H 110/230 V AC**
Ambient temperature	**°C**	40	40
Mean time to failure (MTTF)		517	289
Switch-off time		8°	100
λsd [FIT] safe, detectable		664	638
λsu [FIT] safe, undetectable		968	935
λdd [FIT] dangerous, detectable		218	388
λdu [FIT] dangerous, undetectable		2.67	6.82
SFF [%] Safe failure fraction		99	99
DCS [%] Diagnostic coverage safe		40.7	40.6
DC [%] Diagnosctic coverage		98	98
PFH Probability of dangerous failure per hour		2.67×10^{-9}	6.82×10^{-9}
Safety level		IEC/CEI 61508-1: SIL 3 ISO 13849-1: Category 3 PL e EN 60954-1: Category 3	
Motor overload protection			
		LZ7H or LZ8H 24 V DC	**LZ7H or LZ8H 110/230 V AC**
Ambient temperature	**°C**	40	40
Mean time to failure (MTTF)		447	273
Time to trip		As for Class 10 A, IEC/CEI 60947-4-2	
λsd [FIT] safe, detectable		637	636
λsu [FIT] safe, undetectable		870	841
λdd [FIT] dangerous, detectable		239	402
λdu [FIT] dangerous, undetectable		17	17
SFF [%] Safe failure fraction		99	99
DCS [%] Diagnostic coverage safe		42.3	43.1
DC [%] Diagnosctic coverage		93	95
Safety level		IEC/CEI 61508-1: SIL 2	

Overload protection tripping curve at 20 °C

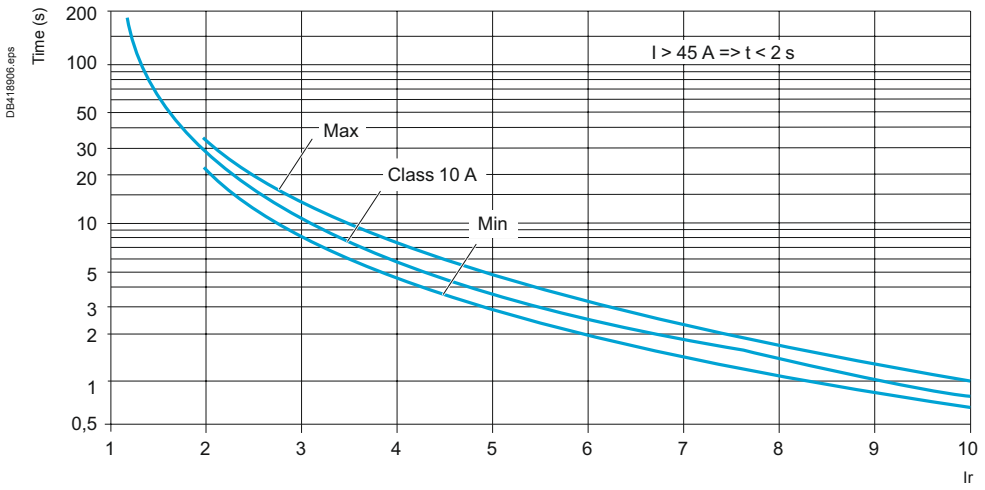

Derating curves: maximum load current (In)

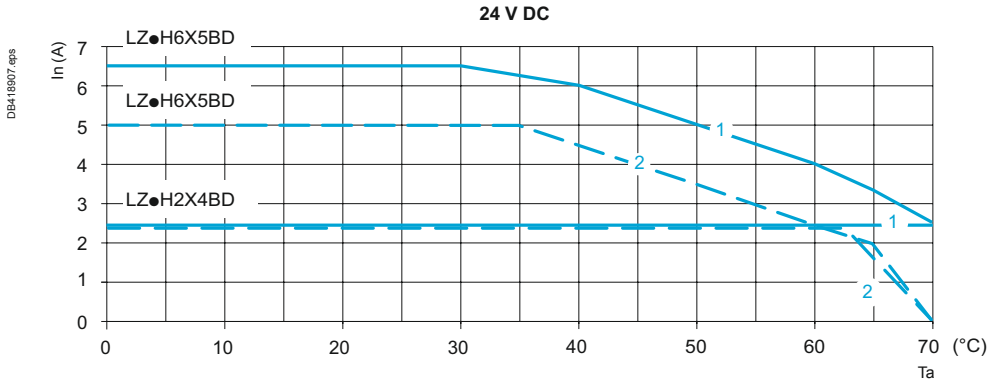

Derating according:
- motor starter control power supply
- ambient temperature (Ta)
- distance between devices 1: 20 mm, with spacing
  2: without spacing.

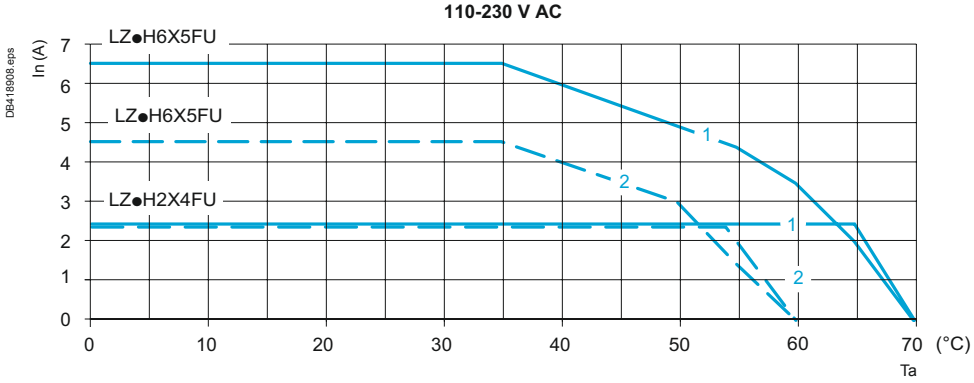

Minimum duty cycle t/T (%) versus cycle duration T (s)

Due to the effect of the peak current on the TeSys H monitoring circuit during the starting time, a stop/start sequence should not occur before a certain amount of time. The diagrams below show the minimum duty cycle according the total period for 2 typical starting time values.

With a starting time = 100 ms

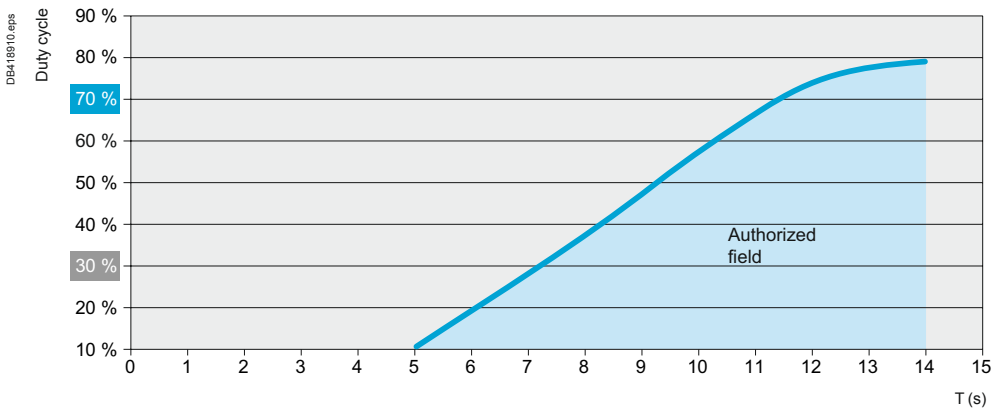

Example: for starting time = 100 ms

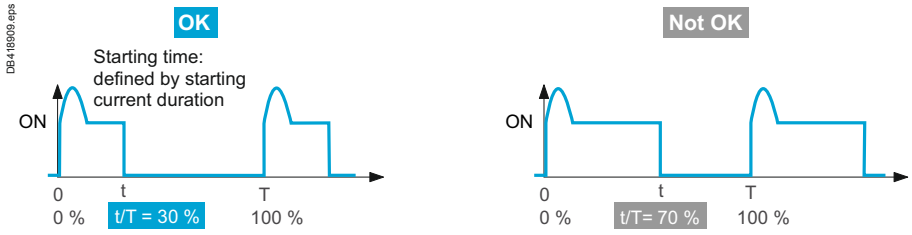

With a starting time = 150 ms

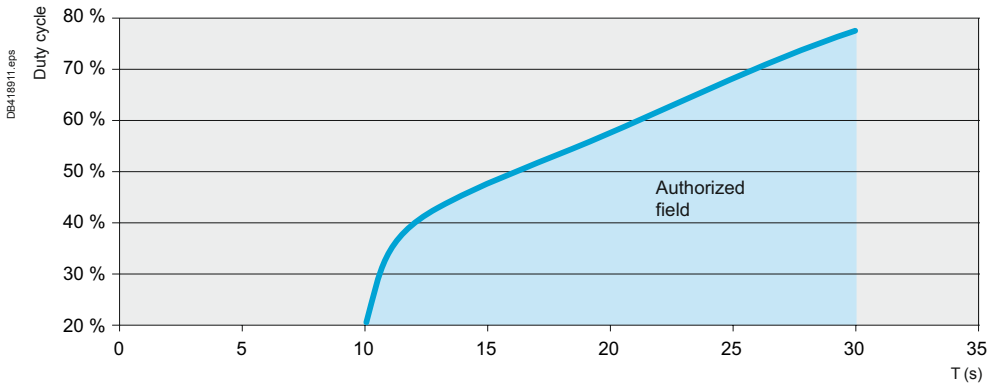

Ultra-compact starters
TeSys H

Dimensions mm

LZ●H●●●●●

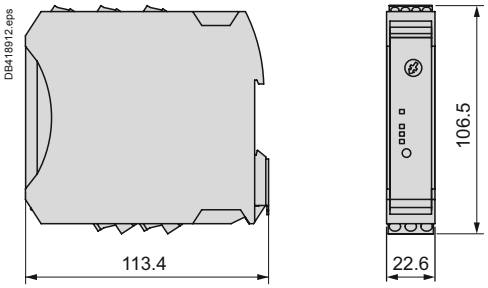

LZ●H●●●3●●

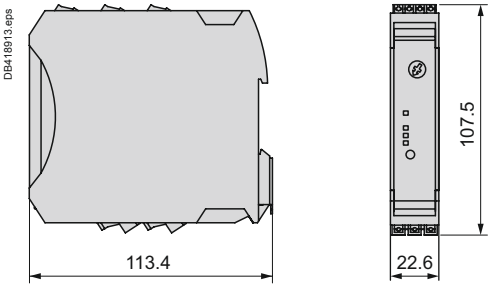

Wiring diagrams

Motor control by standard starter

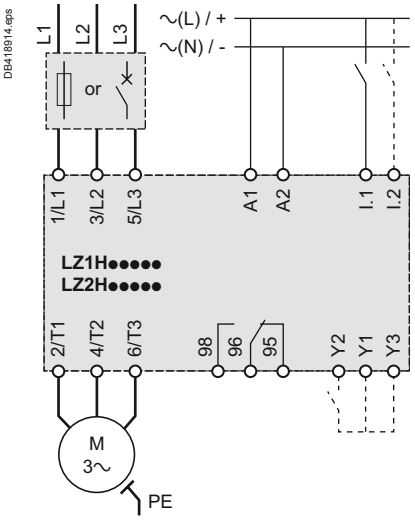

Motor control by safety starter

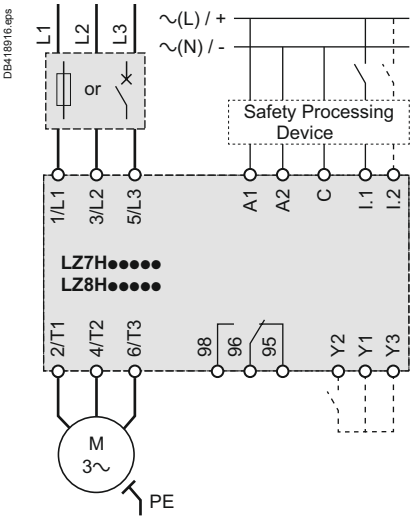

Power terminals

T1, T2, T3	*Motor connection*
L1, L2, L3	*Power inputs*

Control terminals

A1, A2	*Auxiliary power unit*
I.1	*Control input, direction 1*
I.2	*Control input, direction 2 (LZ2H and LZ8H only)*
C	*Control inputs common point (LZ7H and LZ8H only)*
Y1	*Reset mode, common point*
Y2	*Reset mode, remote, manual*
Y3	*Reset mode, automatic*
98, 96, 95	*Trip or error signaling contact*

All-in-one motor starters: TeSys U

Presentation A4/2

Power bases, control modules, connectors - TeSys U

Type of product	Range		Page
Standard power base, basic control functionalities Direct and reversing	Up to **15 kW**		A4/10
Advance power base, control, alarm and communication possibilities Direct and reversing	Up to **15 kW**		A4/12

Communication components - TeSys U

Parallel type cabling system Principle and components		A4/18
Bus type cabling systems Principle, panorama and components	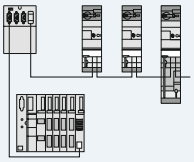	A4/23
LUFP communication gateway		A4/32

Accessories - TeSys U

Short circuit current limiter		A4/33
Handles and accessories for rotary control	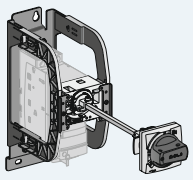	A4/34
Handles and accessories for integration into a MCC drawer	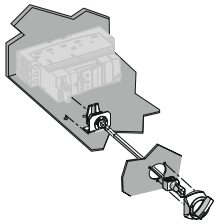	A4/35

Technical Data for Designers A4/37

TeSys U concept

From traditional solution to ...

Motor circuit breaker: TeSys GV2 L



Magnetic protection
> short-circuit protection

Contactor: TeSys D



Control
> Start /Stop

Status monitoring
> signaling
> alarm monitoring

Protection relay: TeSys LRD



Thermal protection
> overload

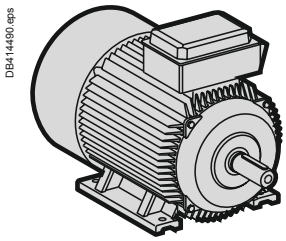

TeSys U concept

...TeSys U starter-controller

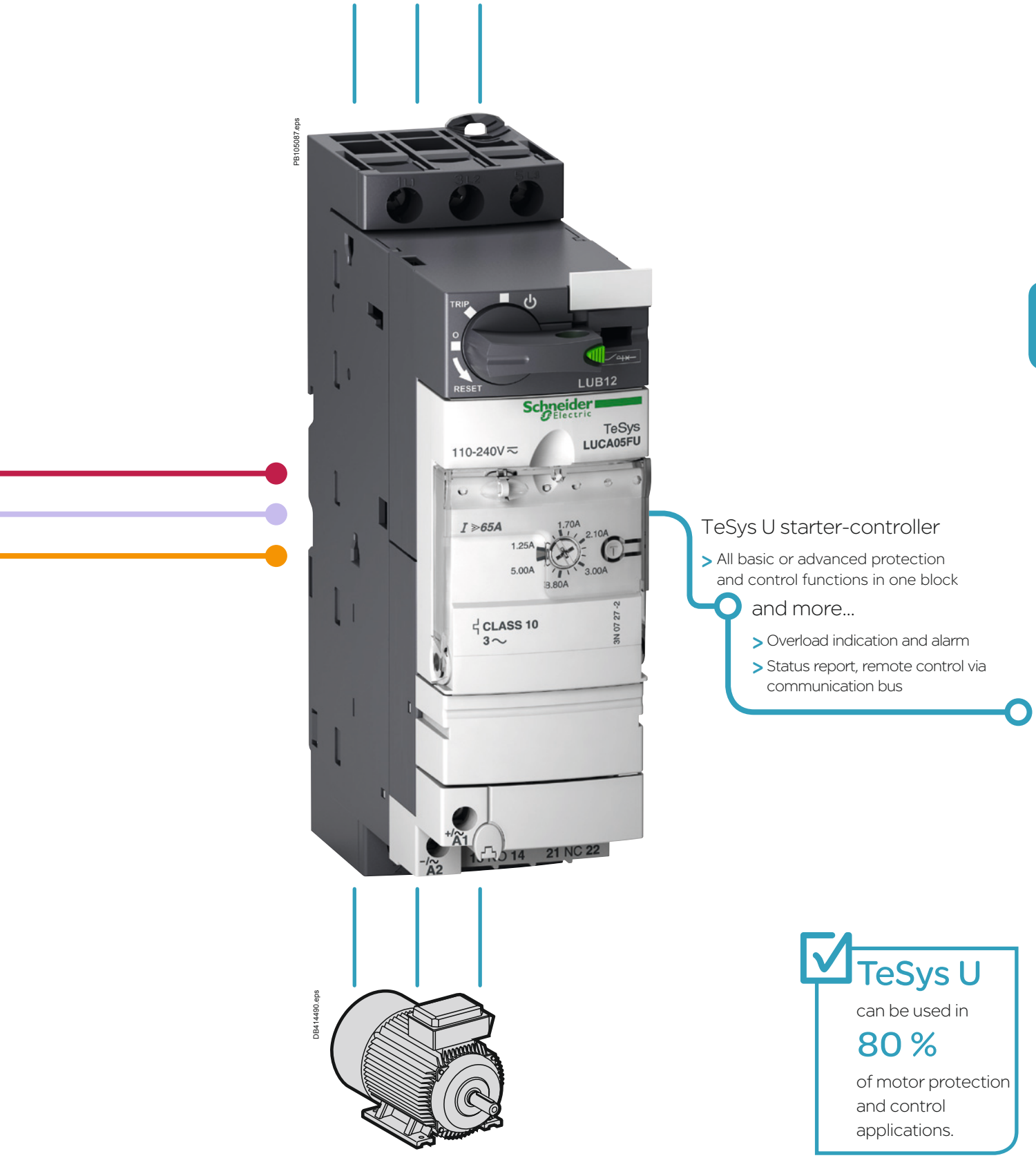

TeSys U starter-controller

> All basic or advanced protection and control functions in one block

and more...

> Overload indication and alarm

> Status report, remote control via communication bus

TeSys U

can be used in

80 %

of motor protection and control applications.

Advantages



1 All in one

- Optimising space in enclosures.
- Total coordination (No contact welding on short circuit).
- Reduces installation times.

2 Simplicity of choice

- Controlled power.
- Protection functions ensured.
- Signaling functions, communication with PLC ensured.

3 Universal mounting

- On DIN rail or grid.

4 Conventional projet design

- Conventional control scheme with start , stop push buttons.

5 Electrically simple

Basic scheme of a TeSys U starter-controller

- Protection and power control functions acting on a single set of contact (QF1).
- The control unit (CU) monitors the voltage and current. In case of fault, it releases the coil, causing tripping.
- The coil is controlled by manual orders from an operator. Automatic control from a PLC is achieved with other diagrams.

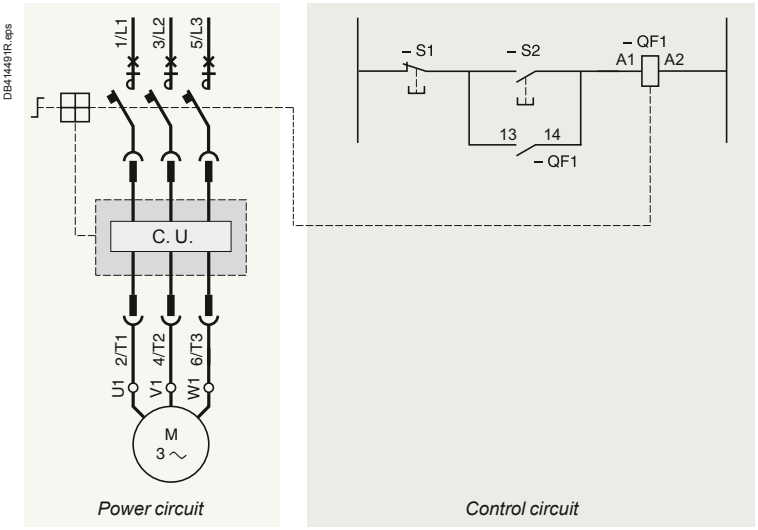

Common characteristics



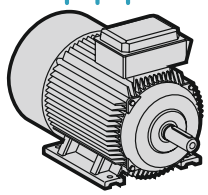

Motor up to

- 7.5 kW / 1-phase 230 V / 50-60 Hz.
- 15 kW / 3-phase 400-440 V / 50-60 Hz.
- 15 kW / 3-phase 500 V / 50-60 Hz.
- 18.5 kW / 3-phase 690 V / 50-60 Hz.
- Non-reversing or reversing.

Short-circuit protection

- Isc:
  - 50 kA at ≤ 400 V
  - 10 kA at 500 V
  - 4 kA at 690 V.
- Up to 690 V AC.

Overload protection

- From 0.15 to 32 A, 6 setting ranges (tripping 14.2 x I setting).
- Test button.
- Adjustment lock.
- Coil choice: 24 V, 48…72 V, 110...240 V DC/AC.

3 power contacts

- For non-reversing (reversing with reverser block).
- Imax, for 12 A power base (direct - reversing):
  - 12 A at up to 500 V / 50 Hz
  - 9 A > 500 V, up to 690 V.
- Imax, for 32 A power base (direct - reversing):
  - 32 A at up to 500 V / 50 Hz
  - 21 A > 500 V, up to 690 V.

1 NO contact
1 NC contact

- 5 A / max. 690 V AC or 250 V CC.

Other monitoring contacts

- 5 A / max. 690 V AC or 250 V DC.

Communication modules

- Modbus,
- Ethernet,
- CANopen,
- DeviceNet,
- Advantys stb,
- Profibus DP,
- Beckhoff,
- AS-interface.

Dimensions

- Base:

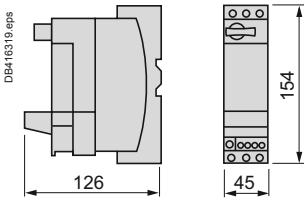

- Base + reverser block:

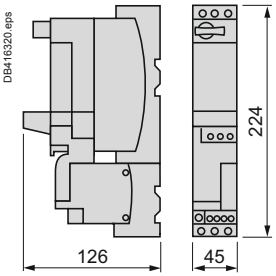

The modularity principle

DB414493.eps

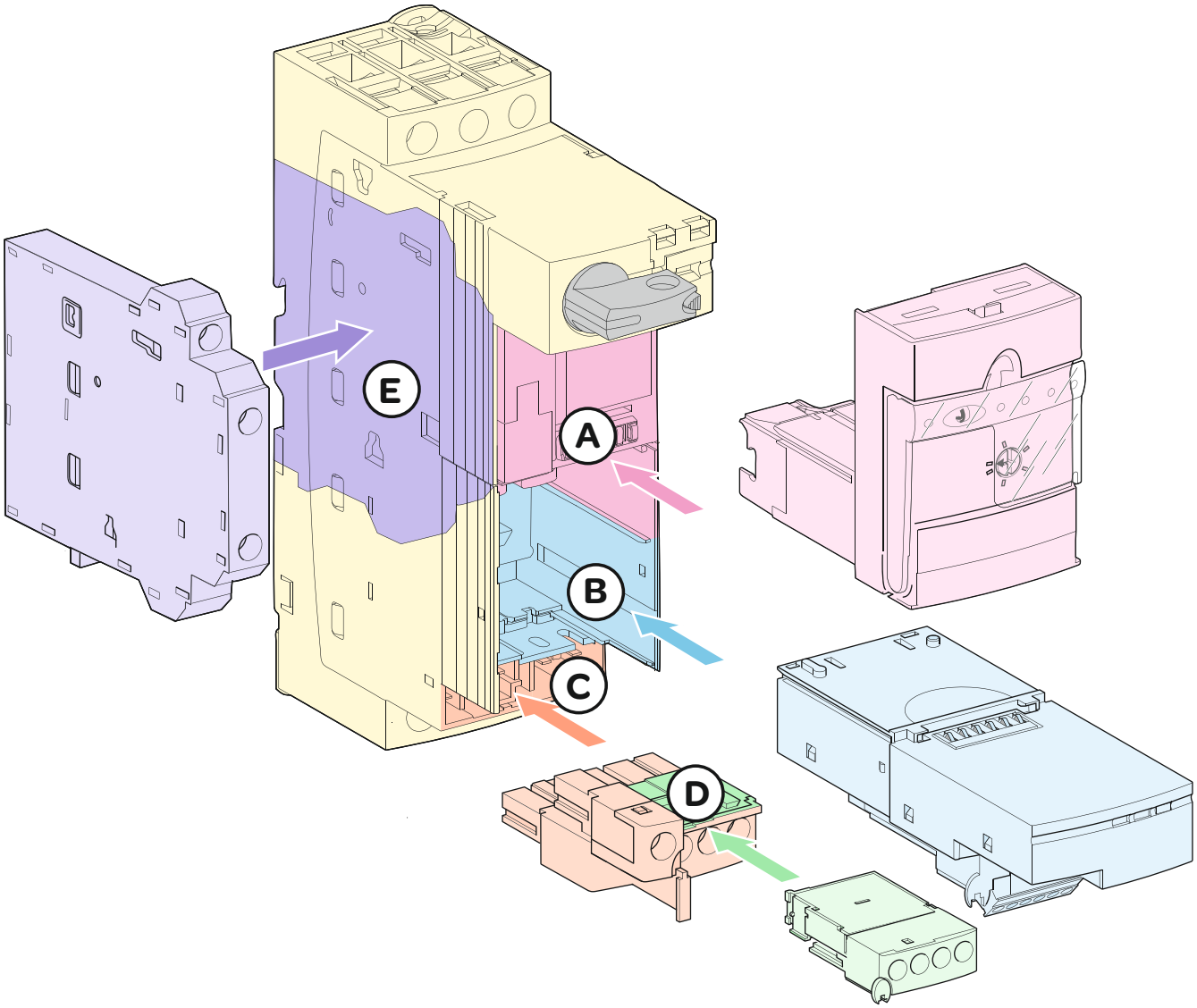

Power base	C Cavity for control terminal block
A Cavity for control unit	D Cavity for additional contact block or shutter
B Cavity for auxiliary module	E Space for additional block fastening

Power Base
This is the basic constituent of the motor starter, it is composed of the power contacts, the control coil, the opening / closing mechanism of the protection device and the control pad.

Additional lateral block
Composed of the protection device signaling contacts.

Control unit
Composed of the power base management processor and setting knobs.

Auxiliary module
Depending on its type, it integrates load status contacts or a communication processor or an alarm processor.

Control terminal block
It is composed of two terminals "coil control", 1 NO auxiliary contact, 1 NC auxiliary contact. It can be eventually connected to an auxiliary communication module via a dedicated cable.

Additional block
It includes protection device additional signaling contacts. By default, this is a simple shutter.

Control units and modules
On/off control, 1 direction of rotation

Components overview

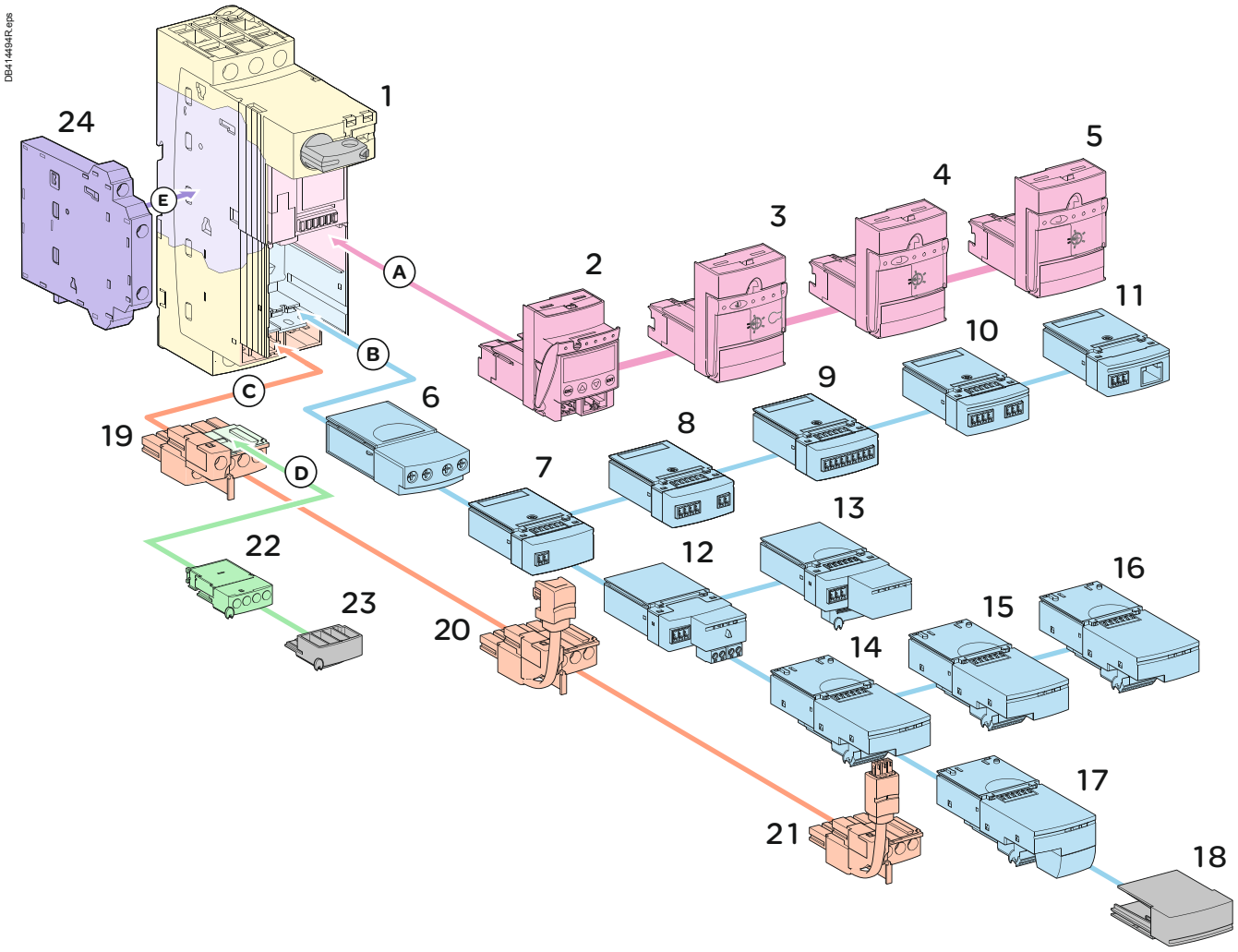

Power base
1- LUB
Non reversing power base - 1 rotation direction

Control units
2- LUCM
Multifunctional control unit

3- LUCB/LUCC/LUCD
Advanced control units

4- LUCA
Standard control unit

5- LUCL
Magnetic protection control unit

Auxiliary module
6- LUFN
Auxiliary contacts module

Load monitoring auxiliary modules
7- LUFW10
Overload alarm module

8- LUFDH11
Overload alarm module with manual reset

9- LUFDA01/LUFAD10
Overload alarm module with automatic reset/remote reset

10- LUFV2
Motor load indication module

Communication auxiliary modules
11- LUFC00
Telefast parallel liaison module, with RJ45 connector

12- ASILUFC5/ASILUFC51
AS-Interface c. m.

13- LULC031/LULC033
Modbus c. m

14- LULC07 Profibus DP c. m

15- LULC08 CANopen c. m.

16- LULC09 DeviceNET c. m.

17- LULC15 Advantys STB c. m.

Shutters
18- LU9C 1
Shutter for module cavity

23- Shutter for contacts additional block cavity

Control terminal blocks
19- LU9BN11
Terminal block for imbedded auxiliary contacts

20- LU9BN11C
Coil terminal block with its connecting cable

21- LU9BN11L
Coil terminal block with its connecting cable

Additional contacts blocks
22- LUA1
Additional contacts

24- LUA8
side-mounting additional contacts

Control units and modules
On/off control,
2 directions of rotation, vertical mounting

Additional components overview

DB414495R.eps

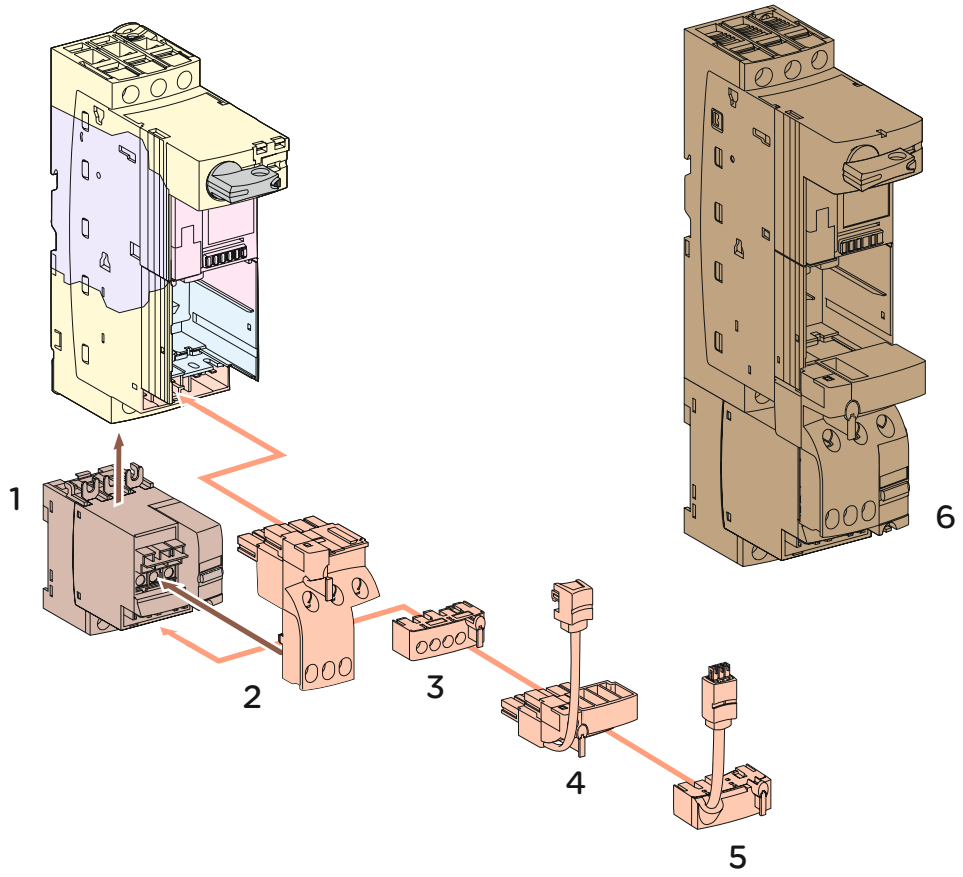

Reverser block

1- LU2M B0●●
vertical-mounting reverser block

Evoluting reversing power base

6- Pre-assembled reversing power base **LU2B12**

Control terminal blocks

2- LU9MR1C
Base/block assembling connector, with terminal block for imbedded auxiliary contacts

3- LU9M1
Coil terminal block for wired control

4- LUMRC
Coil terminal block with its connecting cable for communicating control (only compatible with a selection of com. modules).

5-LUMRL
Coil terminal block with its connecting cable for communicating control (only compatible with a selection of com. modules).

Control units and modules
On/off control,
2 directions of rotation, side-mounting

Additional components overview

DB414497.eps

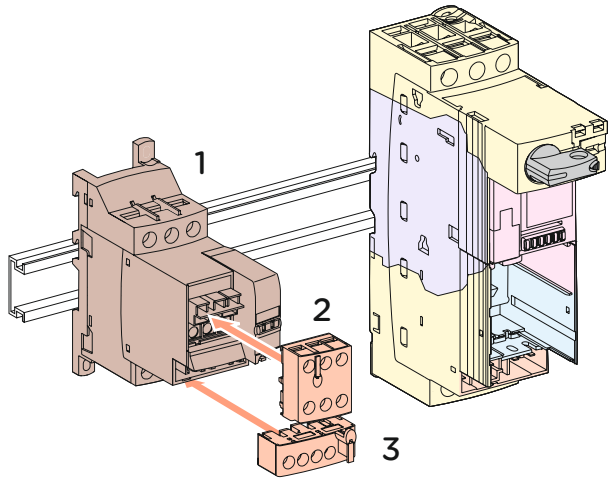

Reverser block

1- LU6M B0●●
Side-mounting reverser block

Terminal blocks for electrical remote control

2- LU9M1
Terminal block for power base coil interlocking. With direction of rotation monitoring contacts

3- LU9MR1
Terminal block for 2 direction control (pulse or maintained control)

Components for "standard control"

- Rotation control: 1 direction - 2 directions.
- Protection: overload + short circuits + main power fault.
- Monitoring: by dry contacts.

1- Selection of the standard power base









Rating / Ue AC	**12 A / 400 V 12 A / 500 V 9A / 690 V**		**32 A / 400 V 23 A / 500 V 21 A / 690 V**	
	1 direction	**2 directions**	**1 direction**	**2 directions**
Cial. ref.: replace dots by the coil code	Standard power base **LUB12**	Standard reversing power base **LU2B12●●**	Standard power base **LUB32**	Standard reversing power base **LU2B32●●**

2- Selection of the control unit

Maximum standardized power ratings of 3 phases motors 50/60 Hz

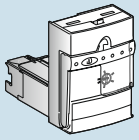

400/440 V	500 V	600 V	Setting range	Lip_in mounting on the power base - Rating	Protection type	
kW	**kW**	**kW**	**A**	**A**	**Thermal + magnetic**	**Magnetic**
					LUCA	**LUCL**
0.09	-	-	0.15...0,6	12 and 32	**LUCAX6●●**	**LUCLX6●●**
0.25	-	-	0.35...1,4	12 and 32	**LUCA1X●●**	**LUCL1X●●**
1.5	2.2	3	1.25...5	12 and 32	**LUCA05●●**	**LUCL05●●**
5.5	5.5	9	3...12	12 and 32	**LUCA12●●**	**LUCL12●●**
7.5	9	15	4.5...18	32	**LUCA18●●**	**LUCL18●●**
15	15	18.5	8...32	32	**LUCA32●●**	**LUCL32●●**

Cial. ref. of the control unit: dots to be replaced by the coil code (see below).

Coil voltage (V)	**24 ⎓**	**24 ∿**	**48...72 ⎓ and 48 ∿**	**110...220 ⎓ and 110...240 ∿**
Coil code	**BL**	**B**	**ES**	**FU**

3- Selection of the modules [1] and signaling blocks (optional)

Auxiliary signaling contacts module

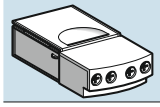

Function	Indicates the ON/OFF running status of the motor, whatever the direction of rotation		
Output	Change of the state of 2 contacts: 1NO + 1NC	Opening of 2 NC contacts	Closing of 2 NO contacts
Cial. reference	**LUFN11**	**LUFN02**	**LUFN20**

Auxiliary signaling contacts block

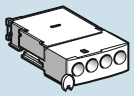

Function	Indicates the open/ closed status of the protection: by NO/NC contact Protection standby/tripped: by SD contact To be inserted below the auxiliary module cavity (B)	
Output	OF and SD contacts: NO type	OF contact: NC type SD contact: NO type
Cial. reference	**LUA1C20**	**LUA1C11**

Auxiliary signaling contacts block

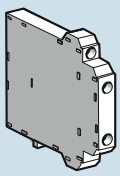

Function	Indicates the open/closed status of the protection To be clamped on the left side of the power base.
Output	2 OF contacts: NO type
Cial. reference	**LUA8E20**

The power bases are delivered with the following items

> **LUB12, LUB32**
12 or 32 A power base with imbedded control terminal block and 3 blanking shutters

> **LU2B12, LU2B32**
12 A (LUB120) or 32 A (LUB320 (1) power base without imbedded control terminal block
+ 1 assembling connector **LU9MR1C**
+ 1 reverser block - vertical mounting **LU2MB0●●**
+ 1 control terminal block **LU9M1**

(1) see description next page.

Control terminal blocks - Characteristics

> **LU9BN11**
2 terminals ➡ for coil
2 terminals ➡ NO contact (24 ... 250 V DC/AC, 5 A max)
2 terminals ➡ NC contac (24 ... 250 V DC/AC, 5 A max)

> **LU9M1**
1 terminal ➡ common
1 terminal ➡ S1 coil
1 terminal ➡ S2 coil
2 terminals ➡ contact NF (24 ... 250 V DC/AC, 5 A max)

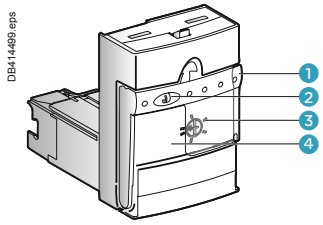

LUCA ●●●●

1. Extraction and locking handle.
2. Sealing of locking handle.
3. Ir adjustment dial.
4. Locking of settings by sealing the transparent cover.

They provide the electrical protection settings

LUCA - standard units

- Protection against overload: 14.2 x Intensity setting.
- Protection against short circuit: 14.2 x I max.
- Protection against missing or unbalanced phases.
- Protection against insulation fault (protection of equipment only).
- Class 10 tripping.
- Frequency 50...60 Hz.

LUCL - magnetic units

- Protection against short circuits.
- To be used when a standard power base is connected to a motor drive or a soft starter, as they provide the overload protection.

Note: both LUCA and LUCL units can be used in the advanced power bases LUB120 and LUB320.

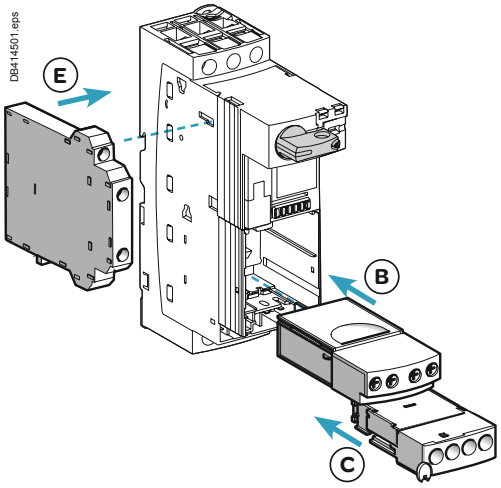

Modules and blocks are compatible with all standard and standard inverting power bases

Common electrical characteristics

- Standard operating voltage: 24…250 V AC/DC.
- Maximum current: 5 A.

References

- Rotation control: 1 direction - 2 directions.
- Protection: overload + short circuit + main power fault.
- Signaling: by dry contacts.
- Digital display of electrical values.
- Overload alarms.
- Network/bus communication.

Components for "advanced control"

1- Selection of the advanced power base and reverser block

PB107397_19.eps



DB416347.eps

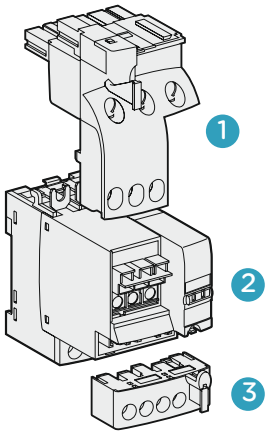

DB414503.eps

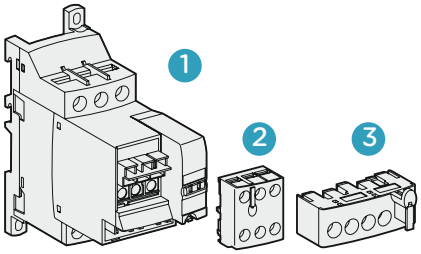

	Advanced power base	Reverser block - vertical mounting	Reverser block - side mounting
Rating / Ue AC			
12 A / 400 et 500 V 9 A / 690 V	**LUB120**	**1 LU9MR1C** **2 LU2MB0●● (1)** **3 LU9M1**	**1 LU6MB0●● (1)** **2 LU9MR1** **3 LU9M1**
32 A / 400 V 23 A / 500 V 21 A / 690 V	**LUB320**		

(1) Terminal coil control A1-A2 and aux. NO + NC.

2- Selection of the control unit

DB414499.eps

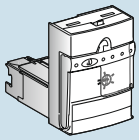

DB414504.eps

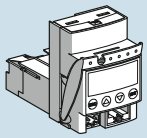

Maximum standardized power ratings of 3 phases motors 50/60 Hz				Setting range	Lip_in mounting on the power base - Rating	Protection type: - overload - short-circuit - Main power fault - alarm			Multifunctional
400/440 V		500 V	600 V						
kW		kW	kW	A	A	Class 10	Class 10	Class 20	Class 5...30
1P	3P	3P	3P			3P	1P	3P	1 - 3P
-	0.09	-	-	0.15...0,6	12 and 32	**LUCBX6●●**	**LUCCX6●●**	**LUCDX6●●**	**LUCMX6BL**
0.09	0.25	-	-	0.35...1,4	12 and 32	**LUCB1X●●**	**LUCC1X●●**	**LUCD1X●●**	**LUCM1XBL**
0.55	1.5	2.2	3	1.25...5	12 and 32	**LUCB05●●**	**LUCC05●●**	**LUCD05●●**	**LUCM05BL**
2.2	5.5	5.5	9	3...12	12 and 32	**LUCB12●●**	**LUCC12●●**	**LUCD12●●**	**LUCM12BL**
4	7.5	9	15	4.5...18	32	**LUCB18●●**	**LUCC18●●**	**LUCD18●●**	**LUCM18BL**
7.5	15	15	18.5	8...32	32	**LUCB32●●**	**LUCC32●●**	**LUCD32●●**	**LUCM32BL**

Cial. ref. of the control unit: replace dots by the coil code.

Coil voltage (V)	24 ⎓	24 ∿	48...72 ⎓ and 48 ∿	110...220 ⎓ and 110...240 ∿
Coil code	**BL**	**B**	**ES**	**FU**

> Selection of the modules and signaling blocks: see page A4/14

Magelis XBT NU HMI terminal (optional)

PB105088.eps



XBT NU400

Provides display and modification of the LUCM multifunctional controller settings. Ready to ensure dialogue with up to 8 TeSys U starter-controller (Modbus protocol - Pre-loaded application and alarm pages).

Main characteristics

- Multi-language: French, English, German, Spanish, Italian.
- Display: 4 lines of 20 characters.
- Width 132 mm, heigth 74mm, depth 43 mm.
- Supply voltage 24 V DC.

Designation	Reference
Magelis TeSys U terminal	**XBTNU400**
Connecting cable XBTNU400 to LUCM ●●BL, L = 2,50 m (1)	**XBTZ938**

(1) A Modbus hub or - junction must be used when connecting several TeSys U.

LUB120, LUB320 - 12 or 32 A advanced power base equipped with:

One NO latching contact + one NC contact
Operation voltage 24 ... 250V AC/DC - I max 5 A
+ 2 blanking shutters

The cavity C is empty, ready for insertion of a terminal block:

- for local control **LU9BN11**
- for centralized control **LU9BN11C**, **LU9BN11L**
- or insertion of an assembling connector **LU9MR1C**, for reverser block - vertical mounting

Inverser block: its maximum controlled power might be limited by the power base capacity

Power base interlocking control:

- vertical mounting: by the assembling connector **LU9MR1C**
- side mounting: by a **LU9MR1** terminal block (to be linked to a **LU9B N11** terminal block in the advanced power base).

Reverse control:

- Local control, to be wired on a **LU9M1** terminal block
- centralized control, by a **LU9MRC** or **LU9MRL** terminal block; its connector must be plugged in a communication module, in the advanced power base.

DB414509.eps

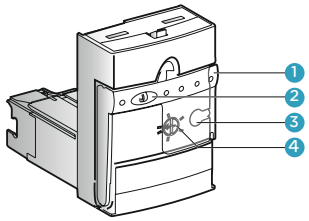

LUCB ●●●●, LUCC ●●●●, LUCD ●●●● control units

1. Extraction and locking handle.
2. Sealing of locking handle.
3. Ir adjustment dial.
4. Test push button.

DB414510.eps

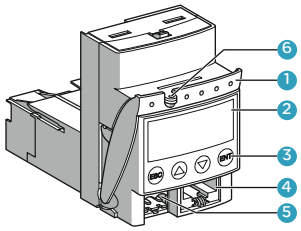

LUCM ●●BL control unit

1. Extraction and locking handle.
2. Built-in LCD display (2 lines, 12 characters).
3. 4 button keyboard.
4. RS485 Modbus communication port, with RJ45 connector.
5. Connector for external 24 V DC power supply.
6. Sealing of locking handle.

LUCB, LUCC, LUCD control and diagnostic units

■ Motor protection, fault diagnostic.
■ Protection against
□ overload: 14.2 x Intensity setting.
Simulation of an overload by depressing the test push button.
□ short circuit: 14.2 x Imax.
□ missing or unbalanced phases.
□ insulation fault (protection of equipment only).

■ Overload alarm management:
□ locally: with one of the LUF family module
□ Remotely: with LULC031, LULC033, LULC07, LULC08, LULC09 or LULC15 (thermal alarm only) communication module.

■ Reset:
□ manual
□ automatic, with a communication module.

LUCM multifunctional control unit

■ Motor protection, operational values display and diagnostic.
■ To be associated with 24 V DC coil only.
■ LUCM ●●BL: tripping class 5 to 30, single phase, three phase
■ Same functions as LUCB ●●●● with complementary functions:
□ in working mode: display of electrical values, setting parameters and events
□ in configuration mode: display of protection and alarm settings.
■ These functions are available for local display on a display panel, and for remote display via a RJ45 Modbus connector.
■ The Modbus - RS485 compatibility is ensured by the Magelis XBT display terminal or a PC with the PowerSuite software.

***Note**: a 24 V DC power supply is required during the configuration process.*

References

- Rotation control: 1 direction - 2 directions.
- Protection: overload + short circuits + main power fault.
- Signaling: by dry contacts.
- Digital display of electrical values.
- Overload alarms.
- Network/bus communication.

Components for "advanced control" (continued)

3a- Selection of the modules and signaling blocks (optional)

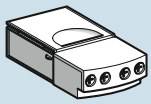

Function	Indicates the ON/OFF running status of the motor, whatever the direction of rotation		
Output	Change of the state of 2 contacts: 1NO + 1NC 5 A/ 24 ... 250V AC/DC	Opening of 2 NC contacts 5 A/ 24 ... 250V AC/DC	Closing of 2 NO contacts 5 A/ 24 ... 250V AC/DC
Cial. reference	**LUFN11**	**LUFN02**	**LUFN20**

3b - Selection of additional function module (optional)

Function	Measure of average current in each phase	Alarm if average current in the phases = 105% of In	Indicates the overload tripping - manual reset	Indicates the overload tripping - reset with the power base control pad or remote reset	
Output	4-20 mA signal, image of the pourcentage of In	Closing of a NO contact	Change of state of 2 contacts: 1 NO + 1 NC	Opening of a NC contact	Closing of a NO contact
Référence	**LUFV2**	**LUFW10**	**LUFDH11**	**LUFDA01**	**LUFDA10**

4a- Selection of the auxiliary module and terminal block for Modicon Telefast system

	Telefast system Module	**Terminal block / control cable 1 direction of rotation**	**2 directions of rotation**
	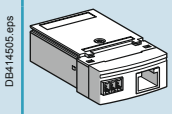	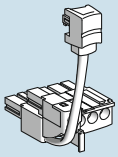	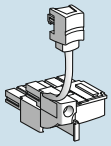
Cial. reference	**LUFC00**	**LU9BN11C**	**LU9MRC**

4b- Selection of the communication auxiliary module

	Communication module	**Terminal block / control cable for LUB●● power base, 1 direction of rotation**		**Terminal blocks / control cables for LU2B●● ou LUB●● + LU2MB0●● power base, 2 directions of rotation**	
	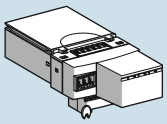	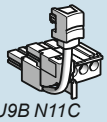 *LU9B N11C*	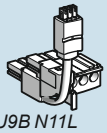 *LU9B N11L*	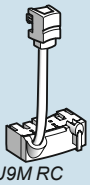 *LU9M RC*	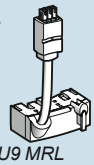 *LU9 MRL*
Modbus	**LUL C033**	**LU9BN11C**		**LU9MRC**	
Ethernet	**LUL C033 + TeSys port**				
AS-Interface	**ASILUF C51**				
Profibus DP	**LUL C07**	**LU9BN11L**		**LU9MRL**	
CANopen	**LUL C08**				
DeviceNet	**LUL C09**				
Advantys stb	**LUL C15**				
Beckhoff	**LUL C14**	contact us			

5- Selection of additional block signaling TeSys U status

	Auxiliary signaling contacts block		**Auxiliary signaling contacts block**
	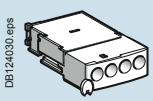		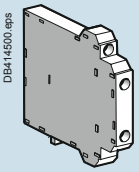
Function	Indicates the off/ready status of TeSys U: by NO/NC contact Protection on/tripped: by SD contact To be inserted below the auxiliary module cavity (B)		Indicates the off/ready status of the protection
Output	OF and SD contacts: NO type	OF contact: NC type SD contact: NO type	2 OF contacts: NO type
Cial. reference	**LUA1C20**	**LUA1C11**	**LUA8E20**

■ The signaling modules with dry contacts are directly wired on indicators and electrical warning devices.
■ Contacts rating: 5 A / 24...250 V AC/DC.
■ The **LUF V2** module is connected to a datalogger or any other indication device providing a 4-20 mA analog input.

■ Module **LUF C00**:
□ indicates the position of the control pad and the state of the poles,
□ collects the FWD, REV commands from an automation process.

■ **Inputs**: P24 V power base coil control, from a 24 V DC PLC output
■ **Outputs**: OF / SD contacts from protection device, OF contact from the poles (to a 24 V PLC input)

■ RJ45 connector for Telefast PLC pre-wiring system:
□ Modicon TM3 (map I/O controllers for RJ45 M221, M241, M25)
□ Modicon STB modules (I/O for automation island)
□ Modicon Telefast (interfaces RJ45/HE10).
■ Must be connected to a **LU9 G02** or **LU9 G03** Telefast distribution box

■ **Compatible exclusively with LUC●●● control unit with coil code B**

■ The terminal blocks + control cables provide the connection to the coil of the power base and the signal contacts.

■ Communication modules:
□ indicates the position of the control pad and the state of the poles,
□ collects the FWD, REV commands from an automation process.

■ The states and the control orders are coded according to the selected communication protocol.

■ Screw clamp terminals to the bus cable.

■ The terminal blocks + control cables provide the connection to the coil of the power base and the signal contacts.

■ Additional blocks:
□ used for wiring indicator lights or controllers.

■ Advantage:
□ the locations for these blocks are always available, regardless of the configuration of the power base.

■ Contact rating: 5 A / 24...250 V AC/DC.

Note: the indication the direction of rotation is available on the reverser block unit:
- On a LU9M R1C assembling connector
- On a LU9M R1 terminal block.

Typical wiring diagrams

Standard or advanced power base

ON/OFF control (1 direction of rotation)

Push buttons wiring

DB414426_b.eps

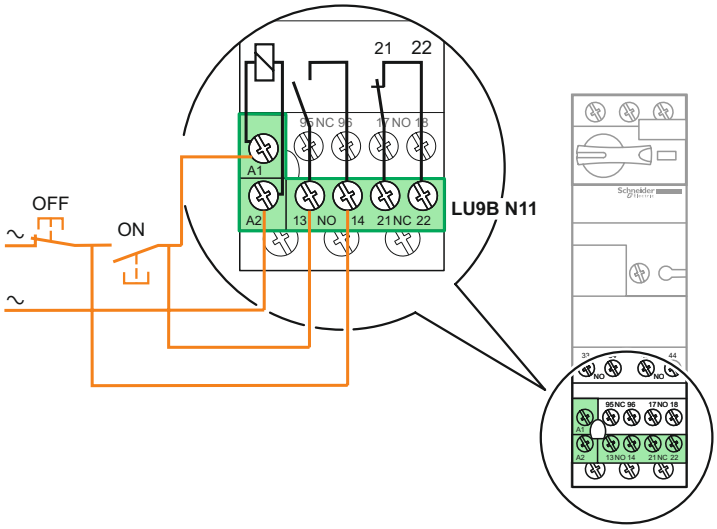

ON indication

"Motor RUN" indicator wiring

DB414428.eps

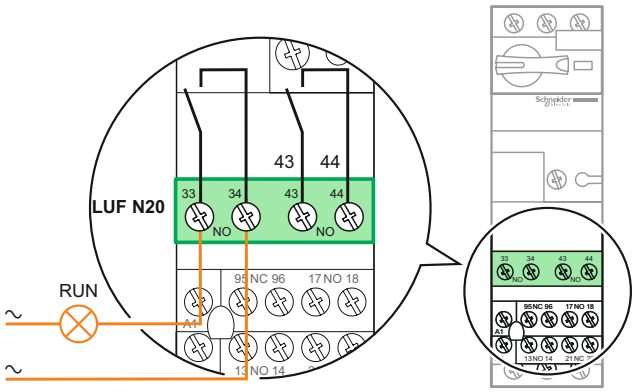

"Motor starter READY" indicator wiring

DB414429.eps

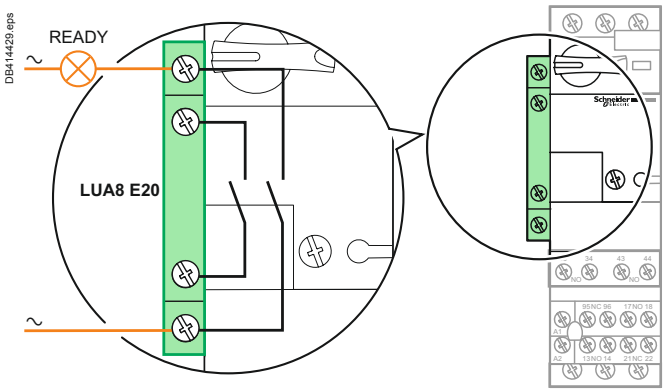

ALARM indication

Protection device status indicator wiring

DB414427.eps

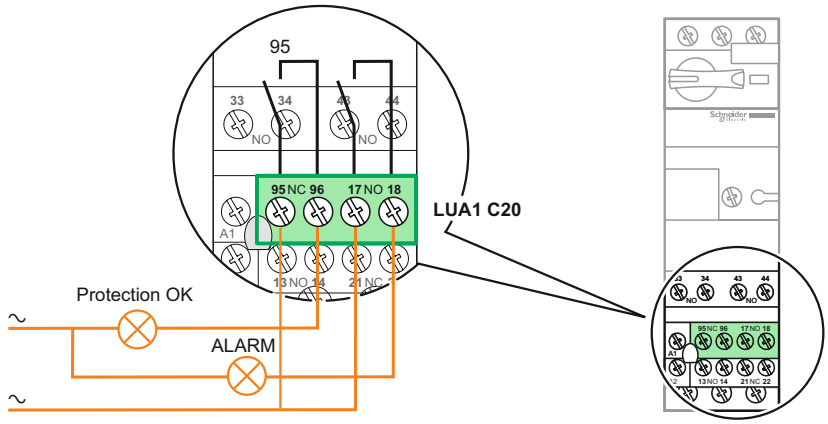

Typical wiring diagrams and contacts status

Power base with vertical mounting reverser block

FW/REV/OFF control (2 directions of rotation)	FW/REV control
Push buttons wiring	FW, REV indicators wiring

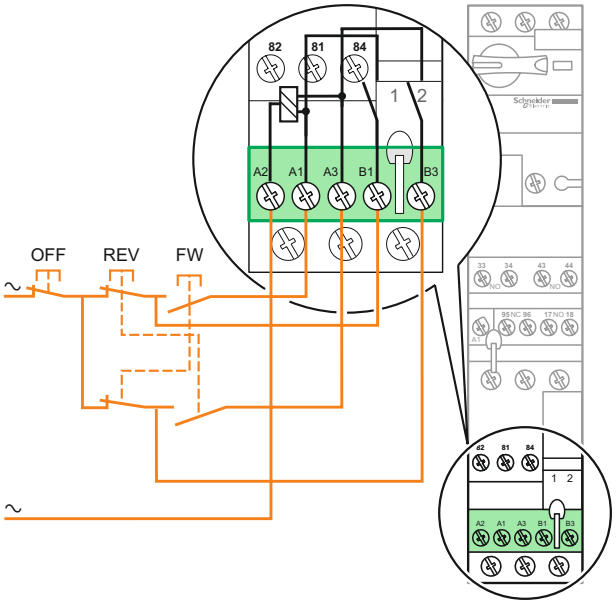

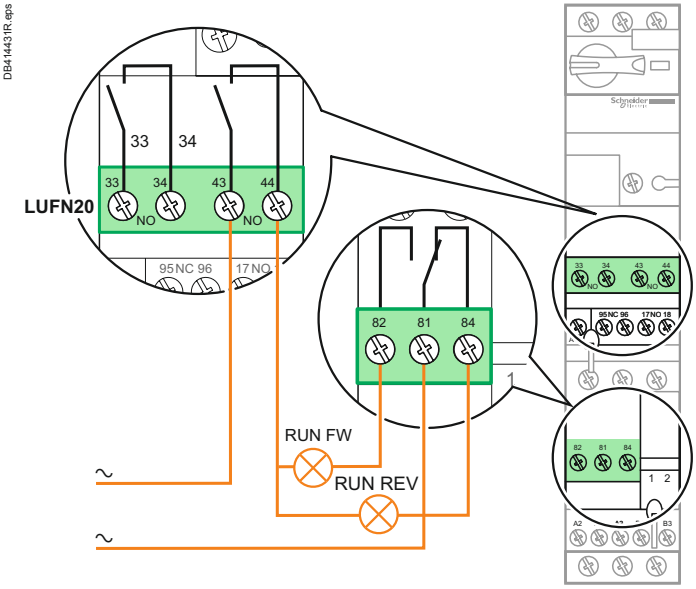

Contact states depending on the product status

		Position of rotary knob	Indication on front panel	N/O pole contact	N/C pole contact	N/O contact any fault	N/C ontact any fault	⏻ N/O contact product ready	N/C contact Rotary knob on OFF position
References of add-on contact blocks and auxiliary contact modules Terminal referencing		–	–	–	**LUF N11** 31-32	**LUA1 C20** 97-98	**LUA1 C11** 95-96	**LUA1 C20** 17-18	–
	or	–	–	–	**LUF N02** 31-32 41-42	**LUA1 C200** No terminal block	**LUA1 C110** No terminal block	**LUA1 C200** No terminal block	**LUA8 E20** 57/58 67/68
	or	–	–	**LUF N20** 33-34 43-44	**LUB9 N11** 21-22	–	–	**LUA1 C11** 17-18	–
	or	–	–	**LUF N11** 43-44	–	–	–	**LUA1 C110** No terminal block	–
	or	–	–	**LUB9 N11** 13-14	–	–	–	–	–
Off		OFF	**0**						
Ready to operate			**0**						
Start			**1**						
Tripped on short-circuit		TRIP	**I>>**						
Tripped on thermal overload	Manual reset mode	TRIP	**0**						
	Automatic reset on thermal overload fault mode		**0**						
	Remote reset mode		**0**						

N/O contact *in closed position.*

N/C contact *in open position.*

Parallel-type cabling systems
Principle

PB105089.eps



Point-to-point wiring

DB416375.eps

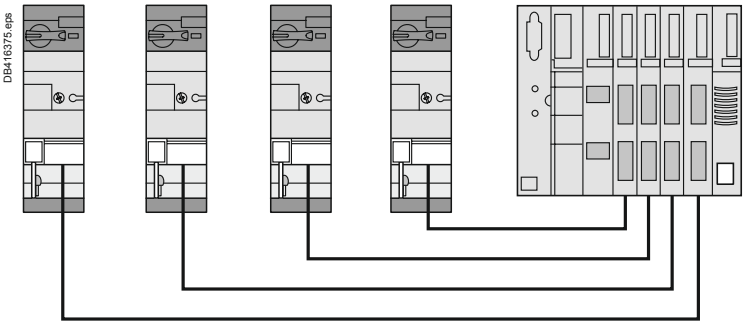

■ The control inputs and signaling outputs of the starter are grouped in a single socket, usually RJ45.
They are individually connected to PLC outputs and inputs.
■ The wires run in parallel in a multicore cable equipped with a multipin connectors, RJ45 in the case of Telefast type system.
■ 3 parallel wiring systems are available:
□ Modicon TM3, based on a RJ45 I/O module for M221, M241, M25 PLC
□ Modicon STB, based on I/O modules for automation island
□ Modicon Telefast: RJ45 / HE10 interfaces.
■ Simple way of proximity wiring. Quick cabling.
It is suitable for machine control panels when a large number of TeSys U starter-controller are installed.

informations

■ The control and signaling terminals of the starters are connected to the output and input terminals of a PLC. No specific connectors or cables are required.
■ Conventional wiring mode, without optimization of the cabling time.
May be suitable when a very small number of starters is used, with a very small number of links.

Parallel cabling systems

DB416374.eps

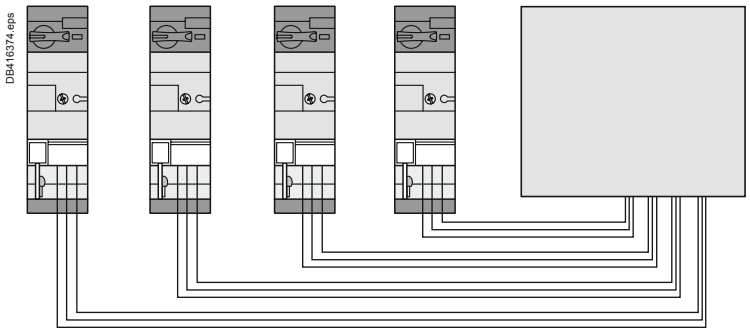

Parallel-type cabling systems
Modicon TM3

Integration in the Modicon TM3 wiring system

The TeSys U starter-controller are directly connected to a I/O module equipped with RJ45 connectors.

1. Modicon M221, M241, M251 PLC's
2. TM3XTY I/O module for 4 starters
3. LU9R●● cables with RJ45 connectors,
4. LUFC00 module for TeSys parallel connection (1 or 2 direction of rotation).

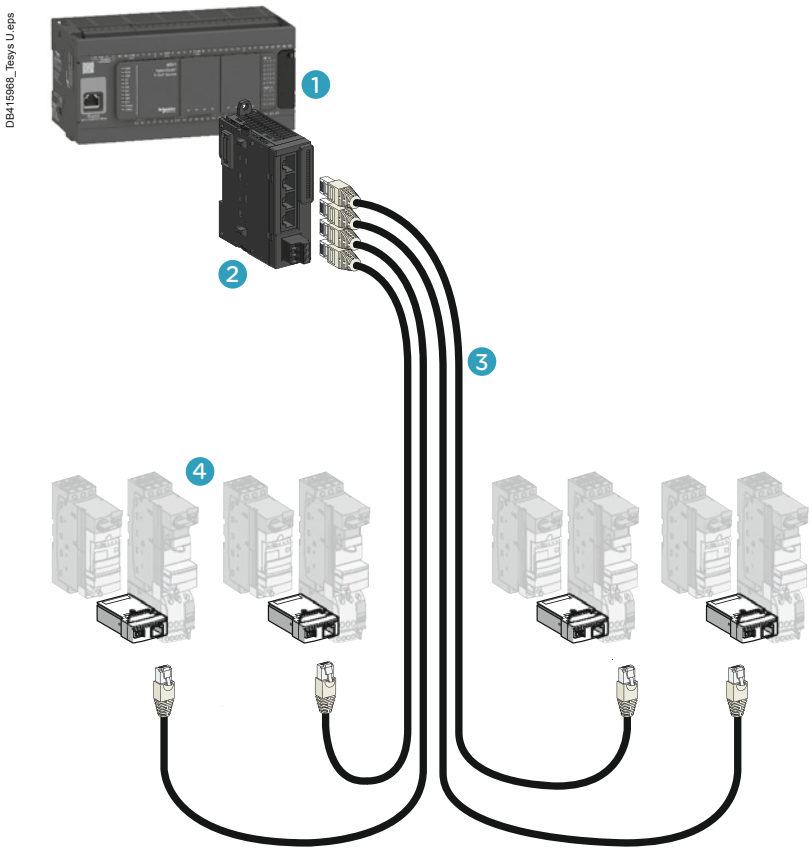

Parallel-type cabling systems
Modicon Advantys STB

Integration in the Modicon Advantys STB system

Advantys STB is a solution for remote I/O modules.

These communicate with the Modicon PLCs range thanks to a serial liaison, using the Advantys STB protocol.

In this example an Advantys I/O module is used to facilitate wiring.

Each of its four terminals receives a preassembled RJ45 cable connected to a TeSys U starter-controller.

1. TeSys U starter-controller (equipped with 24 V DC LUC ●●●● BL control modules)
2. TeSys module for parallel RJ45 wiring: LUFC00 + LU9B N11C (one direction) or LU9MRC (2 directions)
3. RJ45 cables (2 connectors):
   ⩽ 3 m: LU9 R●●
   > 3 m: 490 NTW 000●● (5, 12, 40 or 80 m)
4. PLC: Modicon range
5. I/O Modicon Advantys module: STB EPI 2145K

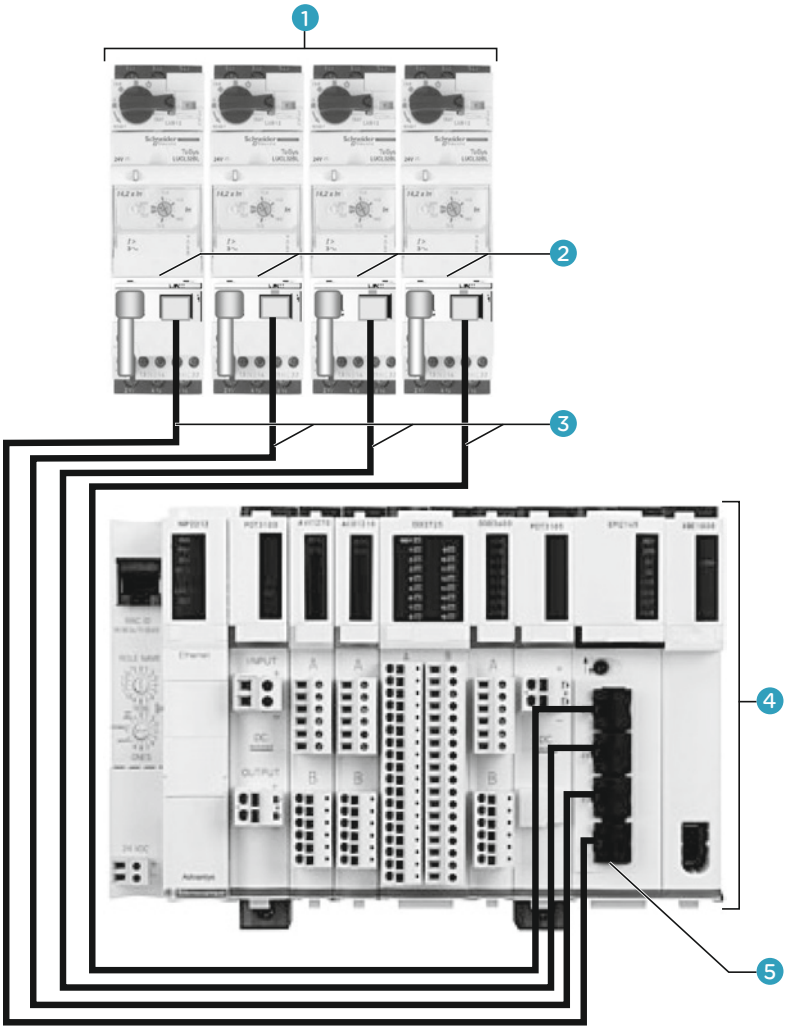

Parallel-type cabling systems
Modicon Telefast

Integration in the Modicon Telefast system

The wiring hubb **LU9G0●** facilitates the connection to Modicon Premium PLCs.
It adapts RJ45 connectors to HE10 available on the Telefast I/O modules.
Connection: up to 8 TeSys U per hubb.

1. TeSys U starter-controllers (equipped with 24 V DC LUC ●●●●BL control units)
2. TeSys Module for parallel wiring RJ45: LUF C00 + LU9B N11C (one direction) or LU9MRC (2 directions)
3. RJ45 cables (2 connectors):
⩽ 3 m: LU9R●●
> 3 m: 490 NTW 000●● (5, 12, 40 or 80 m)
4. Telefast RJ45 / HE10 splitter box: LU9G02 or LU9G03 (different TeSys U connection capacities)
5. HE10 cables (2 connectors): TSX CDP ●●●
6. PLC: Modicon Premium range
7. I/O module: TSX DMY 28FK

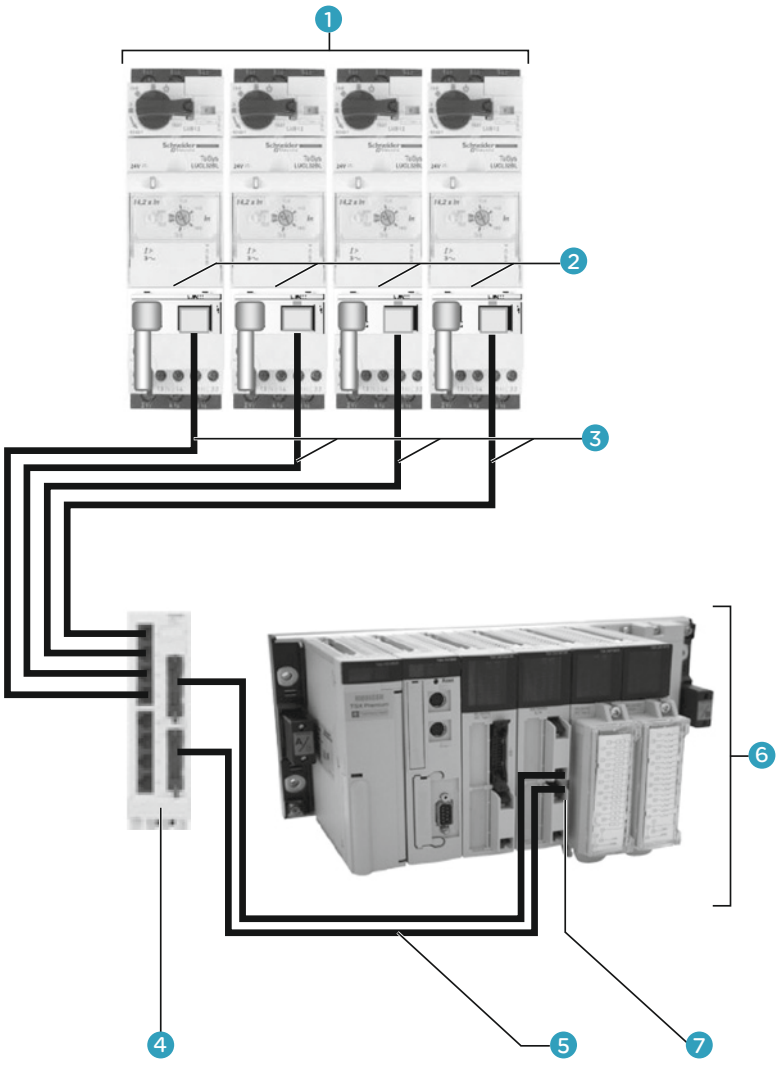

Parallel-type cabling systems
Components TeSys U

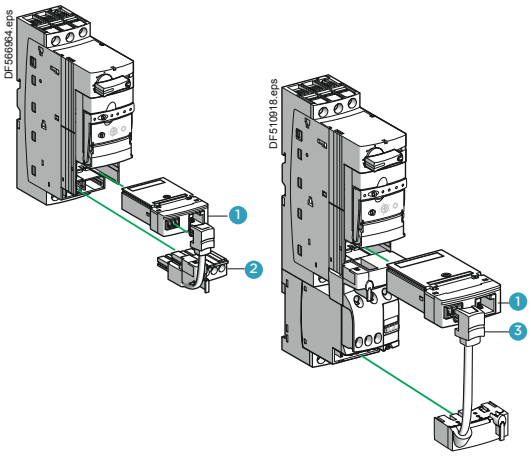

Components for connection of a starter - 1 direction of rotation	
Designation	**Reference**
1 Parallel connection module, RJ45 output 2 coil control inputs, 3 signal outputs	**LUFC00**
2 Pre wired connector, one direction of rotation, for coil connection and one contact for emergency stop	**LU9BN11C**

Components for connection of a starter - 2 directions of rotation	
Designation	**Reference**
1 Parallel connection module, RJ45 output	**LUFC00**
3 Pre wired connector, 2 directions of rotation, for coil connection and one contact for emergency stop	**LU9MRC**



LU9 G02



LU9 G03

Telefast RJ45/ HE10 splitter box	
Designation	**Reference**
Splitter box Connection to TeSys U: 4 RJ45 connectors: for 1 to 4 TeSys U, 1 or 2 directions 4 RJ45 connectors: for 1 to 4 TeSys U, 1 direction Connection to PLC: 1 x HE10 connector - 20 chanels, for pole status, alarms 1 x HE10 connector - 20 chanels, for control. 24 V DC auxiliary power supply required	**LU9G02**
Splitter box Connection to TeSys U: 8 RJ45 connectors: for 1 to 8 TeSys U, 1 or 2 directions Connection to PLC: 1 x HE10 connector - 20 chanels, for pole status, alarms 1 x HE10 connector - 20 chanels, for control. 24 V DC auxiliary power supply required.	**LU9G03**

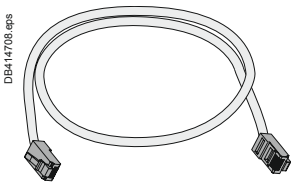

RJ45 cables.

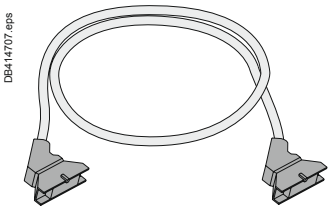

HE10 cables.

RJ45 connection cables, with 2 RJ45 connectors	
0.3 m	**LU9R03**
1 m	**LU9R10**
3 m	**LU9R30**

HE10 connection cables, with 2 HE10/20 way connectors	
Section: AWG 22 / 0.324 mm²	
0.5 m	**TSXCDP053**
1 m	**TSXCDP103**
2 m	**TSXCDP203**
3 m	**TSXCDP303**
5 m	**TSXCDP503**
Section: AWG 28 / 0.080 mm² (flat cable)	
1 m	**ABFH20H100**
2 m	**ABFH20H200**
3 m	**ABFH20H300**

HE10 connection cables, with 1 x HE10/40 way connector (PLC side) and 1x HE10/20 way connector (Splitter box side)	
Section: 0.324 mm²	
0,5 m	**BMXFCC053**
1 m	**BMXFCC103**
2 m	**BMXFCC203**
3 m	**BMXFCC303**
5 m	**BMXFCC503**
10 m	**BMXFCC1003**

Cable with stripped wires (PLC side) 1 x HE10/20 ways connector (Splitter box side)	
Section: AWG 22 / 0.324 mm²	
3 m	**TSXCDP301**
5 m	**TSXCDP501**

Bus-type cabling systems
Principle

PB105092.eps



Application functionality, topology

1 Geographically expanded process

Many motors are scattered on the site, the process control requires individual control to ensure safety and proper operation.
TeSys U is a suitable communicating actuator. The integration of a bus communication module in the starter-controller saves space in the control board and simplifies wiring, compared to solutions based on conventional components (circuit breaker + contactor).

2 Application: automatic motor control / monitoring

Thanks to a communication bus, starter-controllers are part of an automation system controlled by a PLC and (or) various communicating controllers.
These equipment can then share the status and alarm information related to each motor control and perform specific treatments.

3 Bus- type connection

This type of connection allows different topologies (star, ring ...) and supports various protocols dialogue. It is therefore recommended for geographically expanded process, in order to to simplify wiring and ensure multiple-controller management.

- The bus wiring interconnects TeSys U starters controllers and components of the installation via a single the cable.
- Commands and status are coded according to the selected protocol and transmitted on the communication bus.
- This wiring is simple, usually a shielded (or not) pair of wires, suitable for monitored automation, regardless of the number of TeSys U and their locations.

DB416376.eps

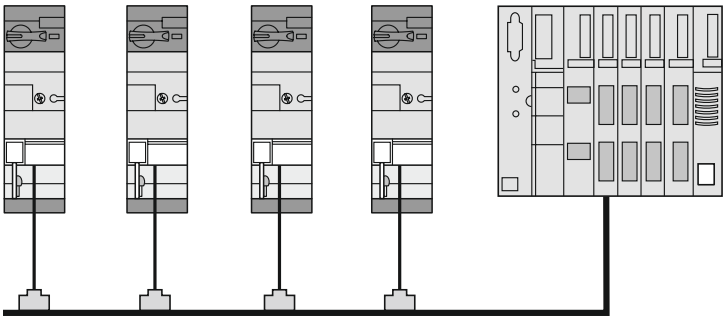

Available TeSys U status and controls via a communication module

Control unit	LUCA	LUCB LUCC LUCD	LUCM
Starter status (ready, running, fault)	■	■	■
Start and Stop commands	■	■	■
Thermal overload alarm		■	■
Remote reset via the bus		■	■
Indication of motor load		■	■
Fault signalling and differentiation		■	■
Remote programming and monitoring of all functions			■
“Log” function			■
“Monitoring” function			■
Alarms (overcurrent, ...)			■

Bus-type cabling systems
View

Network	Architecture	Component references
AS Interface		
Cabling system for rapidly connecting sensors and actuators to the controller. A single cable provides both data transmission and power to sensors. Details page **A4/26**	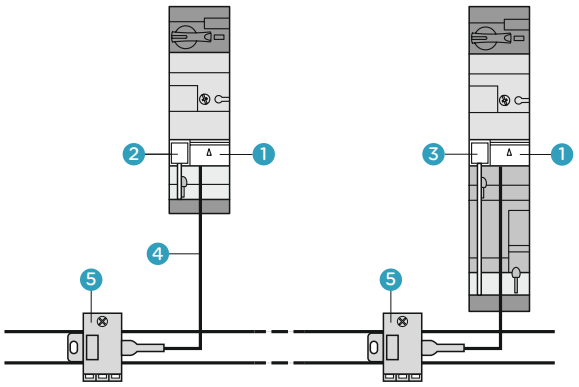	1 ASI LUF C5 or ASI LUF C51 2 LU9B N11C 3 LU9M RC 4 XZ CG0142 5 TC SAT V01 N2
CANopen		
Etoile	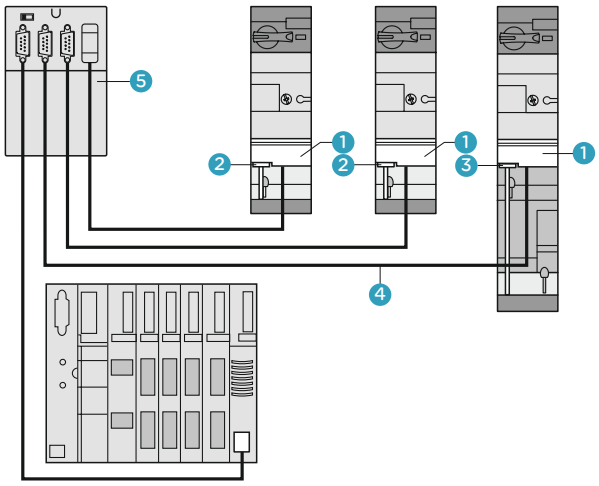	1 LUL C08 2 LU9B N11C 3 LU9M RC 4 TSX CAN C●●● 5 TSX CAN TDM4 6 TSX CPP 110
Bus Details page **A4/27**	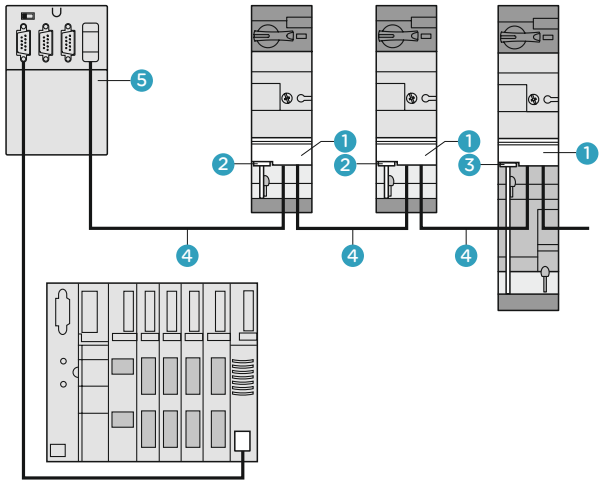	

Network	Architecture	Component references
Modbus		
Details page **A4/28**	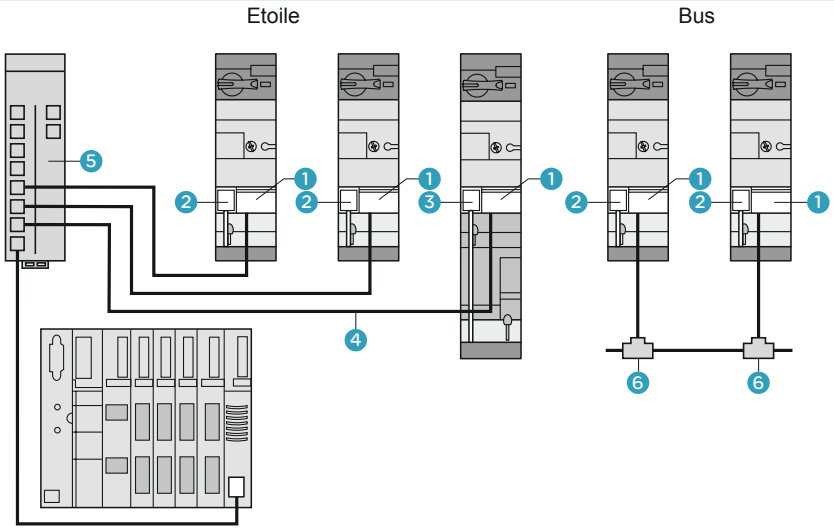	1 LUL C031 or LUL C033 2 LU9B N11C 3 LU9M RC 4 VW3 A8 306R●●● 5 LU9 GC3 6 VW3 A8 306TF
Advantys STB		
Starter-controllers communicate using ADVANTYS STB protocol to fit into a remote I/O architecture. Details page **A4/29**	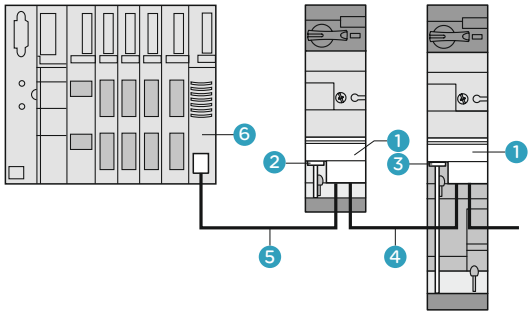	1 LUL C15 2 LU9B N11C 3 LU9M RC 4 LU9 RDD●●● 5 LU9 RCD 6 STB XBE1100
Profibus-DP (Decentralized Peripherals)		
is used for connecting actuators and sensors to a central controller for applications in industrial production. The standard bus provides a number of diagnostic means Details page **A4/30**	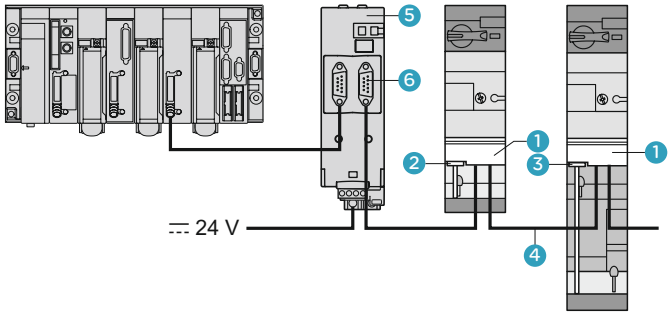	1 LUL C07 2 LU9B N11C 3 LU9M RC 4 LU9 RPB010 LU9 RPB100 LU9 RPB400 5 LU9 AD7 6 LU9 GC7
DeviceNet		
Details page **A4/31**	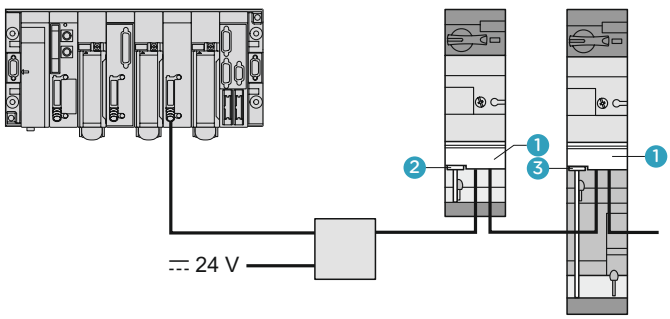	1 LUL C09 2 LU9B N11C 3 LU9M RC

Bus-type cabling systems
TeSys U components for AS-Interface bus

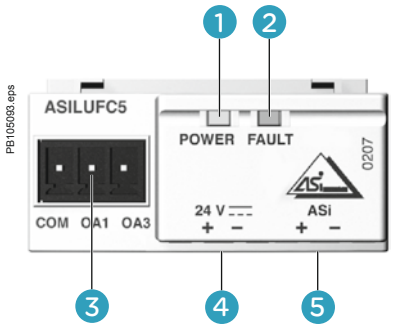

1 Green LED: AS-Interface voltage present
2 Red LED: AS-Interface or module fault
3 Outputs for starter commands
4 Black connector for connection to ⎓ 24 V auxiliary power supply
5 Yellow connector for connection to the AS-Interface system

The LULC09 communication module, combined with the power base and control unit is used to control TeSys U starters-controllers via DeviceNet bus.
The LULC09 communication module is slave type.

Module Specifications

I/O terminal block

- Powered by external 24 V DC (power supply not included):
  - 2 x configurable inputs for binary sensors
  - 1 x 24 V DC output - 0.5 A local auxiliary command.

Connectors

- For TeSys U 24 V DC coil (common, direction 1, direction 2).
- For AS-Interface bus.

Signaling

- Module Status - Error - 24 V, by LED.

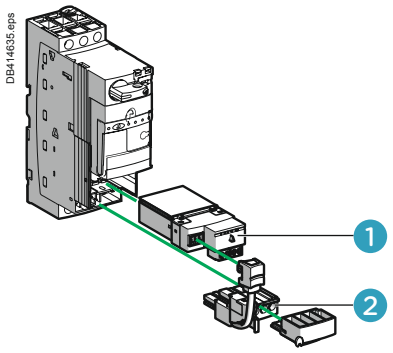

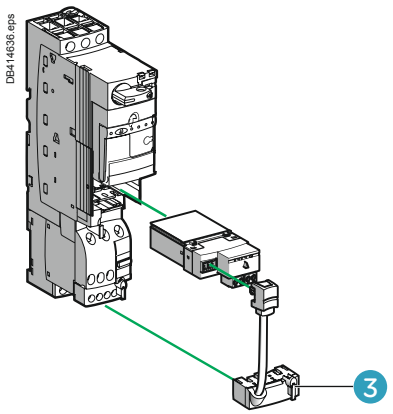

Tesys components

Description	Mark	Max number of slaves	References
AS-Interface communication module	1	31	**ASILUFC5**
		62	**ASILUFC51**
Pre-wired connector: coil - LUB powerbase	2	-	**LU9BN11C**
Pre-wired connector: coil - LUB2B powerbase	3	-	**LU9MRC**

Connection of the communication module

By a "Y" cable with:
- TeSys U side, 2 connectors (bus + power),
- Bus side, one connector to be connected to the AS-Interface TCSATV01N2 tap-off.

Description	References
AS-Interface / TeSys U branch cable, L = 2 m	**XZCG0142**
AS-Interface Tap-off	**TCSATV01N2**



XZ MC11



ASI TERV2

Consoles and cable adapter

Designation	References
Addressing terminal Battery operated. Battery charger supplied AS-Interface V.1 and V.2.1 compatible	**XZMC11**
Adjustment and diagnostics console Runs on LR6 batteries Allows addressing of AS-Interface V.2.1 slaves and diagnostics	**ASITERV2**
Cable adapter For console XZ MC11	**XZMG12**

Bus-type cabling systems
TeSys U components for CANopen bus

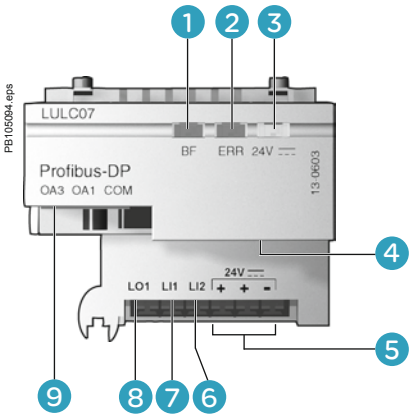

1 LED indicating module status
2 Fault signalling LED
3 LED indicating ⎓ 24 V supply ON for outputs OA1, OA3 and LO1
4 SUB-D connector for bus link
5 ⎓ 24 V supply connection
6 Discrete input
7 Discrete input
8 Discrete output
9 Outputs for starter commands

The LUL C08 communication module, combined with the power base and control unit is used to control TeSys U starters-controllers via CANopen bus.
The LULC09 communication module is slave type.

Module Specifications

I/O terminal block

- Powered by external 24 V DC (power supply not included):
  - 2 x configurable inputs for binary sensors
  - 1 x 24 V DC output - 0.5 A local auxiliary command.

Connectors

- For TeSys U 24 V DC coil (common, direction 1, direction 2).
- For CANopen bus.

Signaling

- Module Status - Error - 24 V, by LED.

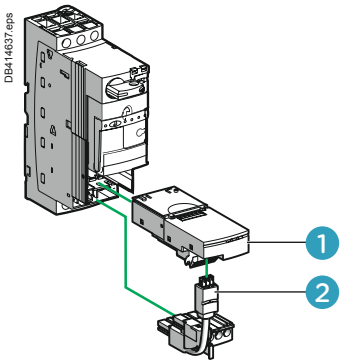

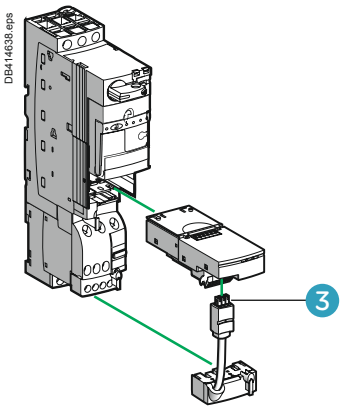

Tesys components		
Description	**Item**	**References**
CANopen communication module	1	**LULC08**
Pre-wired connector: coil - LUB powerbase	2	**LU9BN11L**
Pre-wired connector: coil - LUB2B powerbase	3	**LU9MRL**

Compatibility of CANopen communication module with control units	
LUCA ●●BL / B ●●BL / C ●●BL / D ●●BL	All versions marketed after **2T0481** (1)
LUC M●●BL	All versions ≥ V3.2
LUC MT1BL	All versions ≥ V3.2

(1) This "date code" is made up as follows:
2T *or* ***2C****: factory code.*
04*,* ***05****,* ***06*** *and so on: year of manufacture.*
08*: week.*
1*: 1st day of the week.*

How to get information on the design of a CANopen architecture and the choice of network accessories

Consult the library of downloadable documents on schneider-electric.com by searching on the name of the communication protocol.

Bus-type cabling systems
TeSys U components for Modbus bus

LUL C031

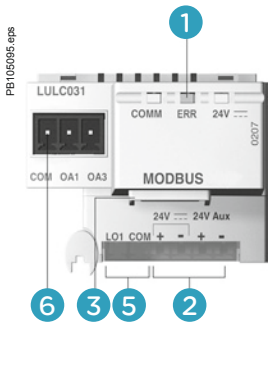

LUL C033

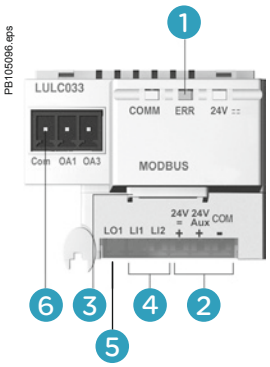

1 Module status signalling LED
2 24 V supply connection
3 RJ45 connector for RS485 Modbus link
4 2 discrete inputs
5 1 discrete output
6 Outputs for starter commands

The LULC031 and LULC032 communication modules, combined with the power base and control unit is used to control TeSys U starters-controllers via Modbus.

Module Specifications

I/O terminal block

- Powered by external 24 V DC (power supply not included):
  - 2 x configurable inputs for binary sensors (on LULC033 only)
  - 1 x 24 V DC output - 0.5 A local auxiliary command.

Connectors

- For TeSys U 24 V DC coil (common, direction 1, direction 2).
- RJ45, For Modbus line.

Signaling

- Module Status - Error - 24 V, by LED.

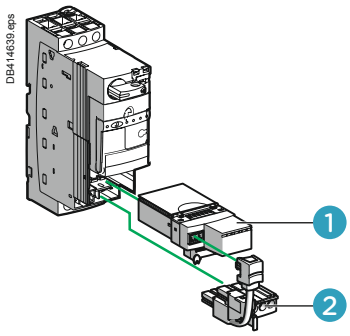

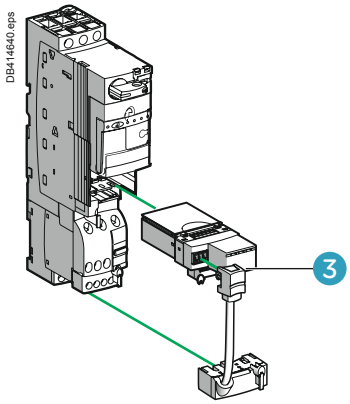

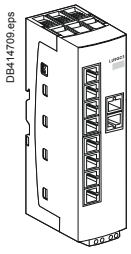

Tesys components			
Description	**Item**	**Bin. input**	**References**
Modbus communication module	1	0	**LULC031**
		2	**LULC033**
Pre-wired connector: coil - LUB powerbase	2	-	**LU9BN11C**
Pre-wired connector: coil - LUB2B powerbase	3	-	**LU9MRC**

Modbus hub		
Description	**Length (m)**	**References**
Modbus communication distributor	-	**LU9GC3**
Cables fitted with 2 x RJ45 connectors	0.3	**VW3A8306R03**
	1	**VW3A8306R10**
	3	**VW3A8306R30**
Tees derivations	0.3	**VW3A8306TF03**
	1	**VW3A8306TF10**
Description		**References**
RS 485 line terminator		**VW3A8306R**

Compatibility of Modbus communication modules				
Communication modules (software version)		**LUCL C031 from V2.3**	**LUCL C033 from V2.1**	**LUCL C033 from V2.2**
Power base	LUB ●● / LU2B ●2	■	■	■
	LUTM ●●BL		■	■
Control unit	LUCA ●●BL	■		■
	LUCB ●●BL LUCC ●●BL LUCD ●●BL	■		■
	LUCM ●●BL	■		■ (1)
	LUCBT ●●BL LUCDT ●●BL		■	
	LUCMT ●●BL		■	

(1) Except LUCM ●●BL V1.04 andV1.06.

How to get information on the design of a Modbus architecture and the choice of network accessories

Consult the library of downloadable documents on schneider-electric.com by searching on the name of the communication protocol.

Bus-type cabling systems
TeSys U components for Advantys STB bus

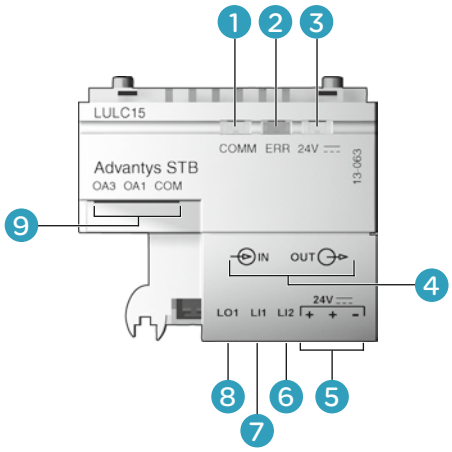

1 Two-colour LED indicating module status
2 Fault signalling LED
3 LED indicating that ⎓ 24 V supply is ON
4 Bus connectors
5 ⎓ 24 V supply connection
6 Discrete input
7 Discrete input
8 Discrete output
9 Outputs for starter commands

Communication module LUL C15 allows direct connection of TeSys U starter-controllers and controllers on an Advantys STB island, between two segments or at the end of a segment. The starter-controller will then be able to make use of the services provided by Advantys STB: self-addressing, autobaud, fallback positions.

Module Specifications

I/O terminal block

- Powered by external 24 V DC (power supply not included):
  - 2 x configurable inputs for binary sensors (on LULC033 only)
  - 1 x 24 V DC output - 0.5 A local auxiliary command.

Connectors

- For TeSys U 24 V DC coil (common, direction 1, direction 2).
- For Advantys STB bus.

Signaling

- Com - Error - 24 V, by LED.

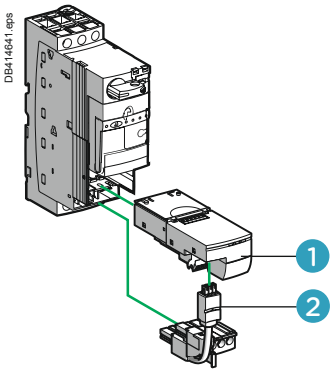

LUB + LUL C15 + LU9B N11L

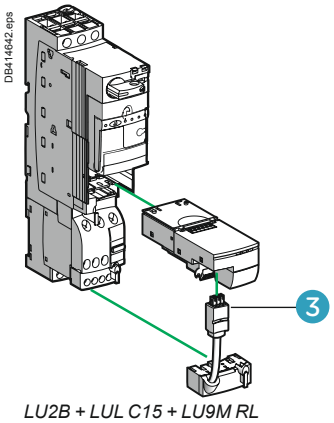

LU2B + LUL C15 + LU9M RL

Tesys components		
Description	**Item**	**References**
Advantys STB communication module	1	**LULC15**
Pre-wired connector: coil - LUB powerbase	2	**LU9BN11L**
Pre-wired connector: coil - LUB2B powerbase	3	**LU9MRL**

Cables		
Description	**Length (m)**	**References**
Cables fitted with connectors, one straight and one elbowed	0.3	**LU9RCD03**
	1	**LU9RCD10**
	3	**LU9RCD30**
	5	**LU9RCD50**
Cables fitted with two straight connectors	0.3	**LU9RDD03**
	1	**LU9RDD10**
	3	**LU9RDD30**

Compatibility of Advantys STB communication module with control units	
LUCA ●●BL / B ●●BL / C ●●BL / D ●●BL	All versions marketed after **2T0481** (1)
LUCM ●●BL	All versions ≥ V3.2
LUCM T1BL	All versions ≥ V3.2

(1) This "date code" is made up as follows:
2T *or* ***2C****: factory code.*
04*,* ***05****,* ***06*** *and so on: year of manufacture.*
08*: week.*
1*: 1st day of the week.*

How to get information on the design of a Advantys STB architecture and the choice of network accessories

Consulter la librairie des documents téléchargeables sur le site schneider-electric.com en faisant une recherche sur le nom du protocole de transmission.

Bus-type cabling systems
TeSys U components for Profidus DP bus

PB105098.eps

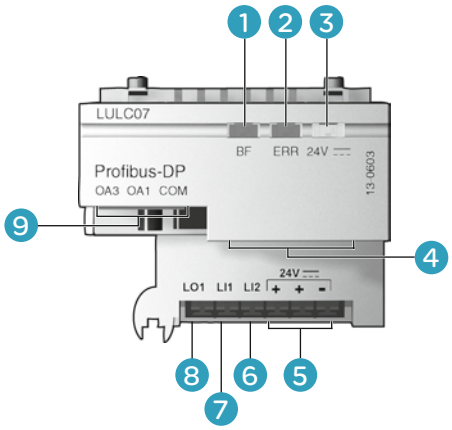

1. Two-colour LED indicating module status
2. Fault signalling LED
3. LED indicating ⎓ 24 V supply ON for outputs OA1, OA3 and LO1
4. SUB-D connector for bus link
5. ⎓ 24 V supply connection
6. Discrete input
7. Discrete input
8. Discrete output
9. Outputs for starter-controller commands (non-reversing and reversing)

DB414643.eps

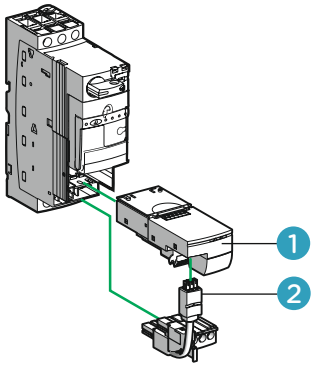

LUB + LUC ●●●BL + LUL C07 + LU9B N11L

DB414644.eps

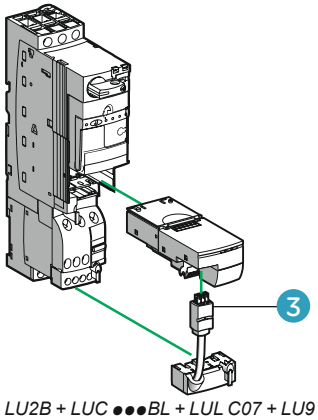

LU2B + LUC ●●●BL + LUL C07 + LU9 MRL

When used in conjunction with the power base and control unit, communication module LULC07 allows TeSys U starter-controllers to be controlled via Profibus DP (Deported Periphery) bus.
Communication module LULC07 is of the slave type.

Module Specifications

I/O terminal block

- Powered by external 24 V DC (power supply not included):
  - 2 x configurable inputs for binary sensors
  - 1 x 24 V DC output - 0.5 A local auxiliary command.

Connectors

- For TeSys U 24 V DC coil (common, direction 1, direction 2).
- For Profibus DP bus.

Signaling

- Com - Error - 24 V, by LED.

Tesys components		
Description	**Item**	**References**
Profibus DP communication module	1	**LULC07**
Pre-wired connector: coil - LUB powerbase	2	**LU9BN11L**
Pre-wired connector: coil - LUB2B powerbase	3	**LU9MRL**

Components for connection to the bus and to the installation

The 24 V DC -Aux supply to Profibus DP modules LUL C07 must pass through power supply module LU9 GC7.
LUL C07 modules must be connected to the LU9 GC7 splitter box in order to be powered.
The number of TeSys U starter-controllers that can be powered by an LU9 GC7 module is limited by the maximum current (1.5 A) which it can deliver.
The ⎓ 24 V supply for the inputs/outputs must be provided separately..

Description	Length (m)	References
Profibus DP power supply module	-	**LU9GC7**
Profibus DP connector	-	**LU9AD7**
Profibus DP cables 2-wire	100	**TSXPBSCA100**
	400	**TSXPBSCA400**
Profibus DP cables 4-wire	10	**LU9RPB010**
	100	**LU9RPB100**
	400	**LU9RPB400**

How to get information on the design of a Profibus DP architecture and the choice of network accessories

Consult the library of downloadable documents on schneider-electric.com by searching on the name of the communication protocol.

Bus-type cabling systems
TeSys U components for DeviceNet bus

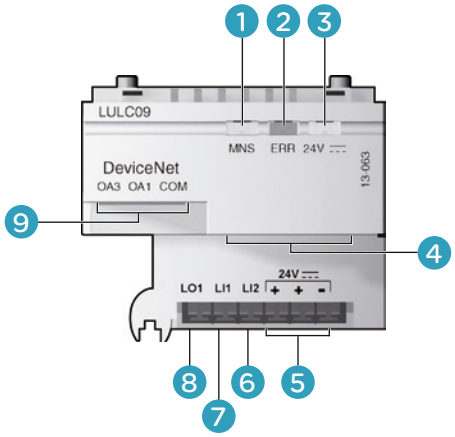

1. LED indicating module status
2. Fault signalling LED
3. LED indicating ⎓ 24 V supply ON for outputs OA1, OA3 and LO1 and 24 V bus
4. DeviceNet connector for bus link
5. ⎓ 24 V supply connection
6. Discrete input
7. Discrete input
8. Discrete output
9. Outputs for starter-controller commands (non-reversing and reversing)

When used in conjunction with the power base and control unit, communication module LULC09 allows TeSys U starter-controllers to be controlled via DeviceNet bus. Communication module LUL C09 is of the slave type.

Module Specifications

I/O terminal block

- Powered by external 24 V DC (power supply not included):
  - 2 x configurable inputs for binary sensors
  - 1 x 24 V DC output - 0.5 A local auxiliary command.

Connectors

- For TeSys U 24 V DC coil (common, direction 1, direction 2).
- For DeviceNet bus.

Signaling

- Com - Error - 24 V , by LED.

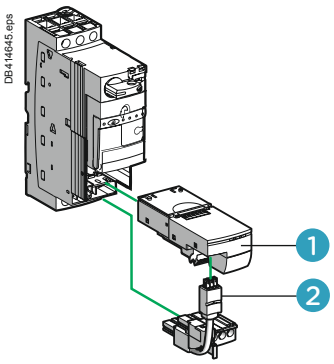

LUB + LUC ●●●BL + LUL C07 + LU9B N11L

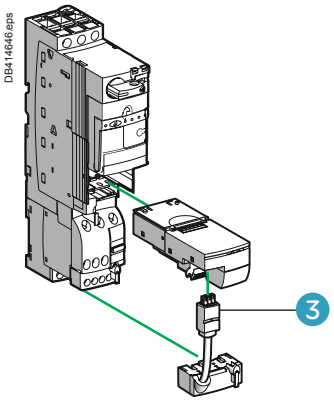

LU2B + LUC ●●●BL + LUL C07 + LU9 MRL

Tesys components		
Description	**Item**	**References**
DeviceNet communication module	1	**LULC09**
Pre-wired connector: coil - LUB powerbase	2	**LU9BN11L**
Pre-wired connector: coil - LUB2B powerbase	3	**LU9MRL**

How to get information on the design of a DeviceNet architecture and the choice of network accessories

Consult the library of downloadable documents on schneider-electric.com by searching on the name of the communication protocol.

Communication gateways LUFP

108816_SE_R.eps



Presentation

Communication gateways LUF P allow connection between the Modbus serial link and Fipio, Profibus DP or DeviceNet field buses.

After configuration, these gateways manage information which can be accessed by the Modbus serial link and make this information available for read/write functions (command, monitoring, configuration and adjustment) on the field buses.

An LUF P communication gateway consists of a box which can be clipped onto a 35 mm omega rail, allowing connection of up to 8 Slaves connected on the Modbus serial link.

Example of architecture

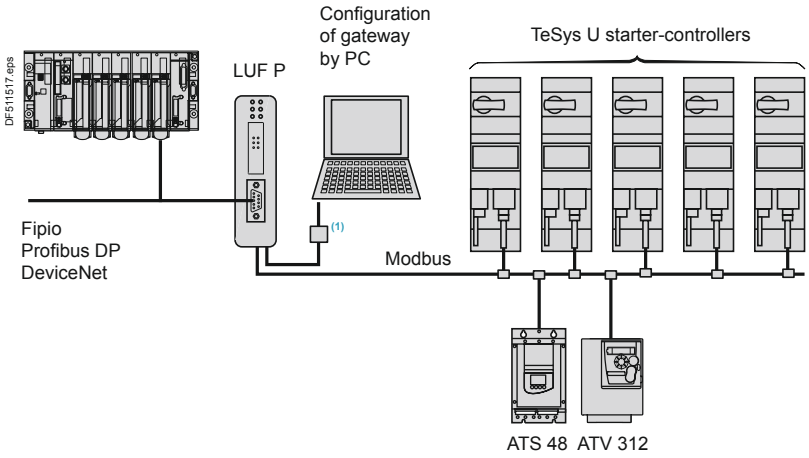

DF526109-17-M.eps

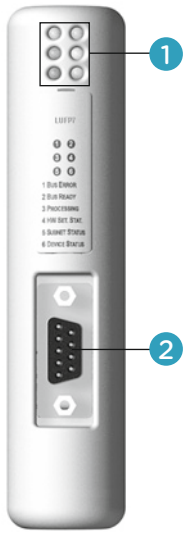

561512.eps

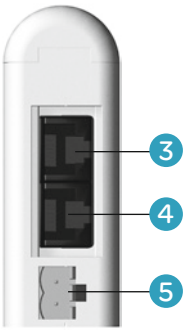

Communication gateway LUFP	
Description	**Reference**
Fipio / Modbus gateway	**LUFP1**
Profidus DP / Modbus gateway	**LUFP7**
DeviceNet / Modbus gateway	**LUFP9**

Description

Front panel of the product

1 LED indicating :
- communication status of the Modbus serial links,
- gateway status,
- communication status of the Fipio, Profibus DP or DeviceNet bus.

2 Connectors for connection to Fipio, Profibus DP or DeviceNet buses.

Underside of product

3 RJ45 connector for connection of the Modbus serial link
4 RJ45 connector for link to a PC
5 ⎓ 24 V power supply

Software set-up

For the Fipio bus, software set-up of the gateway is performed using either PL7 Micro/Junior/Pro software or ABC Configurator software.
For the Profibus DP and DeviceNet buses, software set-up is performed using ABC Configurator.
This software is included in the TeSys U user's manual.

(1) Connection kit for PowerSuite software workshop.

Current limiter blocks and accessories

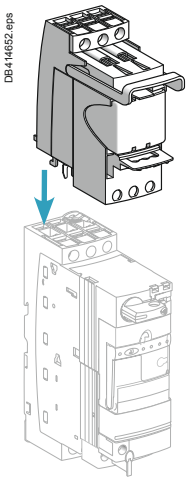

LUA LB1



LUA LF1

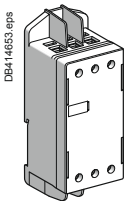

LUA LB920

Short-circuit current limiter block

To be connected in series and upstream of a TeSys U starter-controller . It increases its ability to withstand the short circuit current from 50 kA to 100 or 130 kA under 400 V.

Principle: under the action of a short-circuit, the opening of two contacts of each phase of the limiter creates a resistive arc. The current then decreases to a value tolerable by a TeSys U power base.

Limiter blocks and accessories

Description	Breaking capacity Iq (kA)		Mounting	Unit reference
	≤ 440 V	690 V		
Limiter-disconnector (1 x LUAFL1 cartridge supplied)	130	70	Direct on power base	**LUALB1** (1)
Limiter	100	35	Separate	**LA9LB920** (2)
limiter cartridge for LUALB1	130	70	Limiter-disconnector	**LUALF1**

(1) Must be connected to one power base only.
(2) Can be connected to multiple power bases in parallel, max total current 63 A.

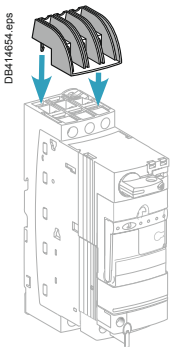

LUA LB920

Phase barrier

Ensures a complementary electrical insulation between phases.
690 V AC network: compulsory.
440 V AC network: compulsory when assembling a UL508 type E compliant motor starter (Self Protected Starter).

Description	Use	Mounting	Reference
Phase separator	LUB or LU2B 12 or 120 LUB or LUB2B 32 or 320 LUA LB1	Live terminals L1, L2, L3	**LU9SP0**

Clip-in labels

Can be clipped on any TeSys U power base, on LU6M B0●● inverser block, and Linergy HK busbar system.

Marking accessory

Description	Sold by lot of	Reference per unit
Clip-in label 8 x 18 mm	100	**LAD90**



LU9ET1S

Safety-chain identification - Red label

The red sticker is dedicated to TeSys U LUCA, LUCB, LUCC, LUCD and LUCL control units.

Description	Reference per unit
Retrofit safety-chain identification sticker	**LU9ET1S**

Handles and components for rotary control

DB414540.eps

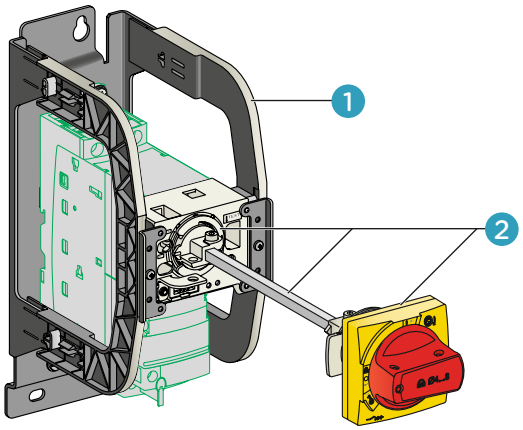

LUA PN21 mounting kit

DB414538.eps

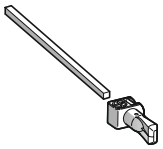

GVA PA1 long shaft

DB414519.eps

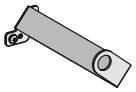

GVA PK12 shaft support plate for deep enclosure

DB414520.eps

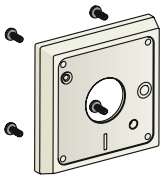

GVAPP1 spacer base (retrofit accessory)

DB414521.eps

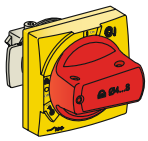

GVA PR54 red handle, IP 54

DB414539.eps

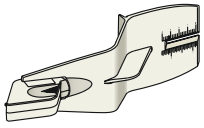

GVAPL01 "Laser square" plotting tool

Extended rotary handle

Allows a circuit breaker or a TeSys U starter-controller installed in back of an enclosure to be operated from the front panel.
The rotary handle can be black or red/yellow, IP54 or IP65. It includes a function for locking the circuit breaker or the starter in the O (OFF) or | (ON) position (depending on the type of rotary handle) by means of up to 3 padlocks with a shank diameter of 4 to 8 mm.
The extension shaft must be adjusted to the depth of the enclosure.
The IP54 rotary handle is fixed with a nut (Ø22) to make it easier to assemble.

Mounting kit

1 TeSys U Power base bracket; its horseshoe shaped sides hold the rotary mechanism facing the original handle.
2 Mechanism, shaft and handle; the shaft enters the handle attached to the door during closing.

Long shaft

■ to be cut to the required length. Equipped with a connection endpiece.

Shaft support plate for deep enclosure

■ Provides horizontal guiding of the shaft, when the door is open.

Spacer base (retrofit accessory)

■ Fixed on a side of the box, for heightening an GVA P●●● handle.

Handle

■ Delivered as a single unit, to be fitted on a side of the enclosure.
Note: references below are suitable for TeSys U power bases after 2004.

"Laser Square" Tool

■ On the principle of an angle extended with a laser beam, the "Laser Square" facilitates tracing the piercing marks on the door or the sides of an enclosure.

"Safety" stickers

■ Marking: Electrical hazard, etc.

Description		Tripping indication	Reference
Mounting kit	Black handle, with error status, IP54	●	**LU9APN21**
	Red handle, with error status, IP54	●	**LU9APN22**
	Red handle, without error status, IP65	-	**LU9APN24**
Separate elements	Long shaft = 315 mm	-	**GVAPA1**
	Shaft (≥ 300 mm) support plate for deep enclosure	-	**GVAPK12**
	Spacer base	-	**GVAPP1**
	Black handle, IP54	●	**GVAPB54**
	Red handle, IP54	●	**GVAPR54**
	Red handle, IP65	●	**GVAPB65**
Tool	"Laser square" plotting tool		**GVAPL01**
"Safety" stickers	French (x10)		**GVAPSFR**
	English (x10)		**GVAPSEN**
	German (x10)		**GVAPSDE**
	Spanish (x10)		**GVAPSES**
	Chinese (x10)		**GVAPSCN**
	Portuguese (x10)		**GVAPSPT**
	Russian (x10)		**GVAPSRU**
	Italian (x10)		**GVAPSIT**

Handles and components for MCC control drawers

PB111807_104.eps



MCC drawers (Motor Control Center)

The drawers are composed of:

- a fixed part, in the frame of the panel,
- a fully withdrawable part, integrating the protection, control and automation components.

With a height of 3/4/6/8/12/18/24/36 modules, they allow the assembling of motor protection/control feeders:

- Direct, one direction of rotation
- Direct, 2 directions of rotation
- Star-delta
- Dahlander (2 speeds)
- 2-speed, separate winding
- Motor drives from 0 to 500 kW
- Soft starters of 0 to 75 kW.

DB123404.eps

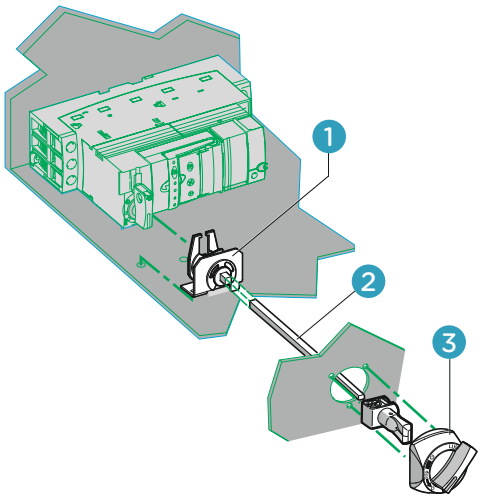

Mounting kit and handle for MCC drawer

Together, this provides manual control of a TeSys U starter-controller from the front face of the drawer.
As the clamping part on top of TeSys U control pad is open, the kit may be used on TeSys U power bases before 2005.

Mounting kit + small handle		
Description	**Item**	**Reference**
Handle with mounting kit for MCC drawer	1 + 2 + 3	**LU9AP20**

TeSys U

Technical Data for Designers

Contents

Characteristics ..... A4/38 to A4/45
Curves ..... A4/46 to A4/49
Selection ..... A4/50 to A4/51
Dimensions ..... A4/52 to A4/53
Schemes ..... A4/54 to A4/65
TeSys U and Altistart ..... A4/66 to A4/81

TeSys motor starters open version
TeSys U starter-controllers

Environment

Product certifications			UL, CSA, CCC, GOST, ASEFA.
			ABS, BV, DNV, GL, LROS. ATEX.
Conforming to standards			IEC/EN 60947-6-2, CSA C22-2 N° 14, Type E UL 508 type E: with phase barrier LU9 SP0
Rated insulation voltage (Ui)	Conforming to IEC/EN 60947-1, overvoltage category III, degree of pollution: 3	**V**	690
	Conforming to UL508, CSA C22-2 n°14	**V**	600
Rated impulse withstand voltage (Uimp)	Conforming to IEC/EN 60947-6-2	**kV**	6
Safety separation of circuits SELV	Conforming to IEC/EN 60947-1 appendix N	**V**	Between the control or auxiliary circuit and the main circuit: 400
			Between the control and auxiliary circuits: 400
Degree of protection Conforming to IEC/EN 60947-1 (protection against direct finger contact)	Front panel outside connection zone		IP 40
	Front panel and wired terminals		IP 20
	Other faces		IP 20
Protective treatment	Conforming to IEC/EN 60068		"TH"
	Conforming to IEC/EN 60068-2-30	**Cycles**	12
	Conforming to IEC/EN 60068-2-11	**h**	48
Ambient air temperature around the device	Storage	**°C**	-40…+85
	Operation	**°C**	Power bases and standard and advanced control units: -25… +70. (At temperatures above 60°C and up to 70°C, for starter-controller LUB32, leave a minimum gap of 9 mm between products).
			Power bases and multifunction control units: -25…+60. (At temperatures above 45 °C, leave a minimum gap of 9 mm between products. At temperatures above 55 °C and up to 60 °C, leave a gap of 20 mm between products.)
Maximum operating altitude		**m**	2000
Operating positions	In relation to normal vertical mounting plane		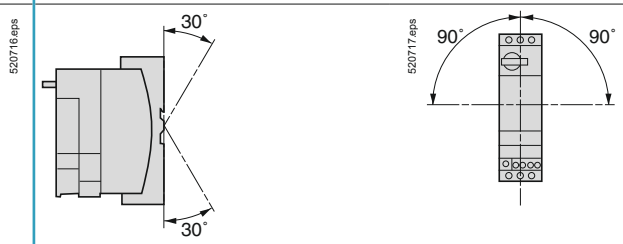
Flame resistance	Conforming to UL 94		V2
	Conforming to IEC/EN 60695-2-12	**°C**	960 (parts supporting live components)
		°C	650
Environmental restrictions			Cadmium and silicone-free, recyclable
Shock resistance 1/2 sine wave = 11 ms	Conforming to IEC/EN 60068-2-27 (1)		Power poles open: 10 gn
			Power poles closed: 15 gn
Vibration resistance 5…300 Hz	Conforming to IEC/EN 60068-2-6 (1)		Power poles open: 2 gn
			Power poles closed: 4 gn (2)
Resistance to electrostatic discharge	Conforming to IEC/EN 61000-4-2	**kV**	In open air: 8 - Level 3
		kV	On contact: 8 - Level 4
Immunity to radiated high-frequency disturbance	Conforming to IEC/EN 61000-4-3	**V/m**	10 - Level 3
Immunity to fast transient currents	Conforming to IEC/EN 61000-4-4	**kV**	All circuits except for serial link: 4 - Level 4
		kV	Serial link: 2 - Level 3
Immunity to dissipated shock waves	Conforming to IEC/EN 60947-6-2		Common mode / Serial mode
	Uc ∿ 24…240 V, Uc ⎓ 48…220 V	**kV**	2 / 1
	Uc = 24 V ⎓		Not applicable
Immunity to conducted high-frequency disturbance	Conforming to IEC/EN 61000-4-6	**V**	10
Radiated emission and conducted	Conforming to CISPR 11 and EN 55011		Class A

(1) Without modifying the contact states, in the most unfavourable direction.
(2) 2 gn with Advantys STB or CANopen communication modules.

References : pages A4/10 to A4/35
Dimensions : pages A4/52 and A4/53
Schemes : pages A4/54 to A4/61

TeSys motor starters open version

TeSys U starter-controllers

Power bases and control units

Power circuit connection characteristics							
Connection to Ø4 mm screw clamp terminals							
Power base, control unit or reverser block type			**LUB 12 + LUCA or LUCB or LUCC or LUCD**	**LUB 32 + LUCA or LUCB or LUCC or LUCD**	**LUB 12 + LUCM**	**LUB 32 + LUCM**	**LU2B LU2M LU6M**
Flexible cable without cable end	1 conductor	**mm²**	2.5…10	2.5…10	2.5…10	2.5…10	2.5…10
	2 conductors	**mm²**	1.5…6	1.5…6	1.5…6	1.5…6	1.5…6
Flexible cable with cable end	1 conductor	**mm²**	1…6	1…6	1…6	1…6	1…6
	2 conductors	**mm²**	1…6	1…6	1…6	1…6	1…6
Solid cable without cable end	1 conductor	**mm²**	1…10	1…10	1…10	1…10	1…10
	2 conductors	**mm²**	1…6	1…6	1…6	1…6	1…6
Screwdriver			Philips n° 2 or flat screwdriver: Ø6 mm				
Tightening torque		**N.m**	1.9…2.5	1.9…2.5	1.9…2.5	1.9…2.5	1.9…2.5
Control circuit connection characteristics							
Connection to Ø3 mm screw clamp terminals							
Flexible cable without cable end	1 conductor	**mm²**	0.75…1.5	0.75…1.5	0.75…1.5	0.75…1.5	0.75…1.5
	2 conductors	**mm²**	0.75…1.5	0.75…1.5	0.75…1.5	0.75…1.5	0.75…1.5
Flexible cable with cable end	1 conductor	**mm²**	0.34…1.5	0.34…1.5	0.34…1.5	0.34…1.5	0.34…1.5
	2 conductors	**mm²**	0.34…1.5	0.34…1.5	0.34…1.5	0.34…1.5	0.34…1.5
Solid cable without cable end	1 conductor	**mm²**	0.75…1.5	0.75…1.5	0.75…1.5	0.75…1.5	0.75…1.5
	2 conductors	**mm²**	0.75…1.5	0.75…1.5	0.75…1.5	0.75…1.5	0.75…1.5
Screwdriver			Philips n° 1 or flat screwdriver: Ø5 mm				
Tightening torque		**N.m**	0.8…1.2	0.8…1.2	0.8…1.2	0.8…1.2	0.8…1.2
Control circuit characteristics							
Rated voltage of control circuit	∿ 50/60 Hz	**V**	24…240	24…240	–	–	–
	⎓	**V**	24…220	24…220	24	24	–
Voltage limits	⎓ 24 V (1)	**V**	20…27	20…27	20…28	20…28	–
Operation	∿ 24 V	**V**	20…26.5	20…26.5	–	–	–
	∿ or ⎓ 48…72 V	**V**	∿ 38.5…72. ⎓ 38.5…93		–	–	–
	∿ 110…240 V	**V**	∿ 88…264	∿ 88…264	–	–	–
	⎓ 110…220 V	**V**	⎓ 88…242	⎓ 88…242	–	–	–
Drop-out	⎓ 24 V	**V**	14.5	14.5	14.5	14.5	–
	∿ 24 V	**V**	14.5	14.5	–	–	–
	∿ or ⎓ 48…72 V	**V**	29	29	–	–	–
	∿ 110…240 V, ⎓ 110…220 V	**V**	55	55	–	–	–
Typical consumption	⎓ 24 V	**mA**	130	220	150	200	120
I max while closing	∿ 24 V	**mA**	140	220	–	–	2360
	∿ or ⎓ 48…72 V	**mA**	280	280	–	–	2300
	∿ 110…240 V, ⎓ 110…220 V	**mA**	280	280	–	–	1000
I rms sealed	⎓ 24 V	**mA**	60	80	70	75	120
	∿ 24 V	**mA**	70	90	–	–	(2)
	∿ or ⎓ 48…72 V	**mA**	35	45	–	–	(2)
	∿ 110…240 V, ⎓ 110…220 V	**mA**	35	25	–	–	(2)
Heat dissipation		**W**	2	3	1.7	1.8	–
Operating time	Closing	**ms**	24 V: 70; 48 V: 60; ≥ 72 V: 50		75	65	–
	Opening	**ms**	35	35	35	35	–
Resistance to micro-breaks		**ms**	3	3	3	3	–
Resistance to voltage dips	IEC/EN 61000-4-11		At least 70 % of Uc for 500 ms				–
Mechanical durability	In millions of operating cycles		15	15	15	15	–
Maximum operating rate	In operating cycles per hour		3600	3600	3600	3600	–
Main pole characteristics							
Number of poles			3	3	3	3	–
Isolation conforming to IEC/EN 60947-1	Possible		Yes	Yes	Yes	Yes	–
	Padlocking		1 padlock with Ø6.9 mm shank				–
Rated thermal current		**A**	12	32	12	32	–
Rated operational current (Ue ≤ 440V)	To IEC/ EN 60947-6-2 Category AC-41		θ ≤ 70°C: 12A	θ ≤ 70°C: 32A	θ ≤ 55°C: 12A	θ ≤ 55°C: 32A	–
	Category AC-43		θ ≤ 70°C: 12A	θ ≤ 70°C: 32A	θ ≤ 55°C: 12A	θ ≤ 55°C: 32A	–
Rated operational voltage		**V**	690 (3)	690 (3)	690 (3)	690 (3)	–
Frequency limits	Of the operating current	**Hz**	40…60	40…60	40…60	40…60	–
Power dissipated in the power circuits	Operational current	**A**	3 6 9 12 18 25 32				–
	Power dissipated in all three poles	**W**	0.1 0.3 0.6 1.1 2.4 4.6 7.5				–
Rated breaking capacity on short-circuit		**V**	230 440 500 690				–
		kA	50 50 10 4				–
Total breaking time		**ms**	2 2 2				–
Thermal limit	With Isc max on 440 V	**kA²s**	90	120	90	120	–

(1) Voltage with maximum ripple of ±10 %.
(2) No consumption sealed.
(3) For 690 V, use phase barrier LU9 SP0.

TeSys motor starters open version

TeSys U starter-controllers

Reversing power bases and auxiliary contacts

Specific characteristics of power bases LU2B and reverser blocks LU2M or LU6M				
Duration of inrush phase		∼ 50/60 Hz	**ms**	25
		⎓	**ms**	15
Maximum operating time	Without change of direction		**ms**	75
	With change of direction		**ms**	150
General characteristics of auxiliary contacts				
Conventional thermal current (Ith)	For ambient temperature q	< 70 °C	**A**	5
Frequency of the operational current			**Hz**	Up to 400
Minimum switching capacity λ = 10^{-8}		U min	**V**	17
		I min	**mA**	5
Short-circuit protection	Conforming to IEC/EN 60947-5-1		**A**	gG fuse: 4
Short-time rating	Permissible for	1 s	**A**	30
		500 ms	**A**	40
		100 ms	**A**	50
Insulation resistance			**mΩ**	10
Non-overlap time	Guaranteed between N/C and N/O contacts		**ms**	2 (on energisation and on de-energisation)
Specific characteristics of auxiliary contacts built-into the power base				
Linked contacts	Conforming to IEC/EN 60947-4-1			Each power base has 1 N/O contact and 1 N/C contact which are mechanically linked
Mirror contact	Conforming to IEC/EN 60947-1			The N/C contact fitted in each power base reliably represents the state of the power contacts (safety scheme)
Rated operational voltage (Ue)			**V**	Up to ∼ 690; ⎓ 250
Rated insulation voltage (Ui)	Conforming to IEC/EN 60947-5-1		**V**	690
	Conforming to UL, CSA		**V**	600
Specific characteristics of auxiliary contacts in modules LUF N, of auxiliary contacts LUA1 and of reverser blocks LU2M and LU6M				
Rated operational voltage (Ue)			**V**	Up to ∼ 250; ⎓ 250
Rated insulation voltage (Ui)	Conforming to IEC/EN 60947-5-1		**V**	250
	Conforming to UL, CSA		**V**	250

Rated operational power of contacts
Conforming to IEC/EN 60947-5-1

a.c. supply, categories AC-14 and AC-15
Electrical durability (valid for up to 3600 operating cycles/hour) on an inductive load such as the coil of an electromagnet: making current (cos φ 0.7) = 10 times the power broken (cos φ = 0.4)

	V	24	48	115	230	400	440	600
1 million operating cycles	VA	60	120	280	560	960	1050	1440
3 million operating cycles	VA	16	32	80	160	280	300	420
10 million operating cycles	VA	4	8	20	40	70	80	100

d.c. supply, category DC-13
Electrical durability (valid for up to 1200 operating cycles/hour) on an inductive load such as the coil of an electromagnet, without economy resistor, the time constant increasing with the load.

V	24	48	125	250
W	120	90	75	68
W	70	50	38	33
W	25	18	14	12

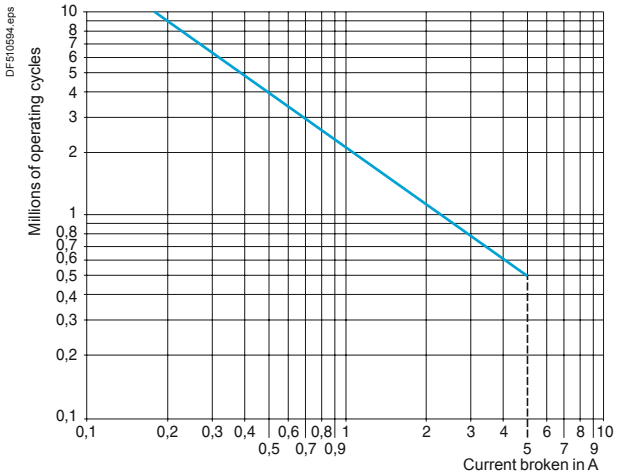

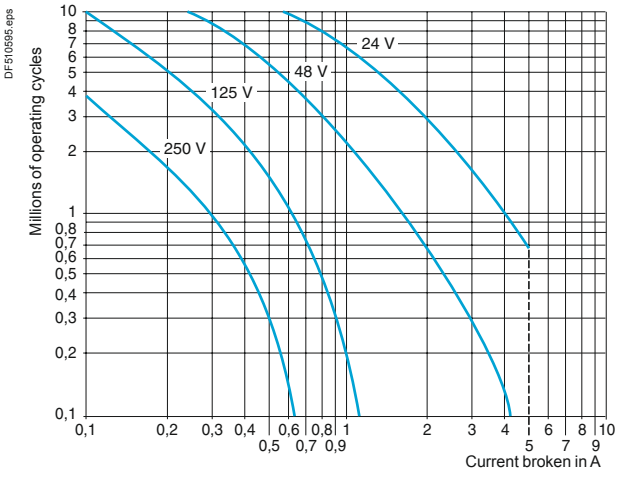

References :
pages A4/12 to A4/14

Dimensions :
pages A4/52 and A4/53

Schemes :
pages A4/54 to A4/61

TeSys motor starters open version

TeSys U starter-controllers

Control units

Characteristics of standard control units LUCA

Protection	Motor type		3-phase
	Conforming to standard		IEC/EN 60947-6-2, UL 508, CSA C22-2 n°14
Overload protection	Tripping class conforming to UL 508, IEC/EN 60947-6-2		10
	Frequency limits of the operational current	**Hz**	40…60
	Temperature compensation	**°C**	- 25…+ 70
	Protection against phase imbalance		Yes
Short-circuit protection	Tripping threshold		14.2 x Ir (setting current)
	Tripping tolerance		± 20 %

Characteristics of advanced control units LUCB, LUCC and LUCD

Control unit type			**LUCB**	**LUCC**	**LUCD**
Protection	Motor type		3-phase	Single-phase	3-phase
	Conforming to standard		IEC/EN 60947-6-2, UL 508, CSA C22-2 n°14	IEC/EN 60947-6-2, UL 508, CSA C22-2 n°14	IEC/EN 60947-6-2, UL 508, CSA C22-2 n°14
Overload protection	Tripping class conforming to UL 508, IEC/EN 60947-6-2		10	10	20
	Frequency limits of the operational current	**Hz**	40…60	40…60	40…60
	Temperature compensation	**°C**	-25…+70	-25…+55	-25…+70
	Protection against phase imbalance		Yes	–	Yes
Short-circuit protection	Tripping threshold		14.2 x Ir max.	14.2 x Ir max.	14.2 x Ir max.
	Tripping tolerance		±20 %	±20 %	±20 %

Characteristics of multifunction control units LUCM

Protection	Motor type		Parameters can be set: single-phase or 3-phase
	Conforming to standard		IEC/EN 60947-6-2, UL 508
Overload protection	Tripping class conforming to UL 508, IEC/EN 60947-6-2		5, 10, 15, 20, 25, 30 (selectable)
	Frequency limits of the operational current	**Hz**	50…60
	Temperature compensation	**°C**	-25…+55
Communication interface for terminal on enclosure door	Physical interface		RS 485 multi-drop
	Connections		RJ45 on front panel
	Protocol		Modbus RTU
	Maximum transmission speed	**bit/s**	19 200 (self-configuration up to this value)
	Maximum return time	**ms**	200
Display	Type		LCD, 2 lines of 12 characters
	Language version		Multilanguage (English, French, German, Italian, Spanish)
	Precision		±5 %
	Resolution		1 % of Ir
Auxiliary supply	External type	**V**	⎓ 24, with maximum ripple of ±10 %.
	Heat dissipation	**W**	0.8

Configuration table for protection devices and alarms on multifunction control units LUCM

	Tripping	**Alarm**	**Adjustment of tripping threshold**		**Adjustment of time before tripping**		**Adjustment of alarm threshold**	
	Factory setting	**Factory setting**	**Range**	**Default value**	**Range**	**Default value**	**Range**	**Default value**
Overcurrent	Activated (1)	–	3…17 Ir	14.2	–	–	–	–
Overload	Activated (1)	Activated	0.5…32 A (2)	Ir min	Class: 5…30	5	10…100 % of the thermal state	85 %
Earth fault	Activated	Activated	0.2…5 Ir min	0.3 Ir min	0.1…1.2 s	0.1 s	0.2…5 Ir min	0.3 Ir min
Phase imbalance	Activated	Activated	10…30 %	10 %	0.2…20 s	5 s	10…30 %	10 %
Torque limitation	Deactivated	Deactivated	1…8 Ir	2 Ir	1…30 s	5 s	1…8 Ir	2 Ir
No-load running	Deactivated	Deactivated	0.3…1 Ir	0.5 Ir	1…200 s	10 s	0.3…1 Ir	0.5 Ir
Long starting time	Deactivated	Deactivated	1…8 Ir	Ir	1…200 s	10 s	1…8 Ir	Ir

Configuration of additional functions on multifunction control units LUCM

	Factory setting	**Setting range**
Reset	Manual	Manual, automatic or remote
Time before reset	120 s	1…1000 s
Type of load	3-phase motor	3-phase motor, single-phase motor
	Self-cooled	Self-cooled, force cooled
Language	English	English, French, German, Italian, Spanish
Display	Average current	Average current, thermal state of motor, current in phase 1 / 2 / 3, earth leakage current, phase imbalance, cause of last 5 faults

(1) This function cannot be deactivated.
(2) The setting range depends on the rating of the control unit used.

References : pages A4/12
Dimensions : pages A4/52 and A4/53
Schemes : pages A4/54 to A4/61

TeSys motor starters - open version

TeSys U starter-controllers

Limiter-disconnector, current limiter, thermal overload alarm function module and thermal overload fault signalling modules

Characteristics of limiter-disconnector LUA LB1

Rated insulation voltage (Ui) conforming to standard IEC/EN 60947-1		**V**	690	
Conventional thermal current (Ith) conforming to standard IEC/EN 60947-1		**A**	32	
Operating threshold	I rms	**kA**	50	
Breaking capacity		**V**	440	690
		kA	130	70
Mounting			Directly on the upstream terminals of the starter-controller	
Cabling				
Solid cable	1 conductor	**mm²**	1.5…10	
	2 conductors	**mm²**	1.5...6	
Flexible cable without cable end	1 conductor	**mm²**	1…10	
	2 conductors	**mm²**	1…6	
Flexible cable with cable end	1 conductor	**mm²**	1...6	
	2 conductors	**mm²**	1...6	
Screwdriver			Phillips n°2 or flat screwdriver Ø6 mm	
Tightening torque		**N.m**	1.9…2.5	

Characteristics of current limiter LA9 LB920

Rated insulation voltage (Ui) conforming to standard IEC/EN 60947-1		**V**	690	
Conventional thermal current (Ith) conforming to standard IEC/EN 60947-1		**A**	63	
Operating threshold	I rms	**A**	1000	
Breaking capacity		**V**	440	690
		kA	100	35
Mounting			Separate	
Cabling				
Solid cable	1 conductor	**mm²**	1.5…25	
	2 conductors	**mm²**	1.5...10	
Flexible cable without cable end	1 conductor	**mm²**	1.5…25	
	2 conductors	**mm²**	2.5…10	
Flexible cable with cable end	1 conductor	**mm²**	1.5…16	
	2 conductors	**mm²**	1.5…4	
Screwdriver			Phillips n°2 or flat screwdriver Ø6 mm	
Tightening torque		**N.m**	2.2	

Characteristics of thermal overload alarm function modules LUF W10

Activation threshold			Fixed at 88 % of the thermal tripping state
Hysteresis between activation and switching off			5 %
Display			By LED on front panel
Supply			Powered by the control unit
Discrete output characteristics	Type		N/O contact
	AC-15		230 V max; 400 VA 100 000 operating cycles
	DC-13		24 V; 50 W 100 000 operating cycles
Conventional thermal current (Ith)	For ambient temperature θ < 70 °C	**A**	2
Short-circuit protection	Conforming to IEC/EN 60947-5-1	**A**	gG fuse: 2

Characteristics of thermal overload fault signalling and reset modules

Module type			**LUF DH11**	**LUF DA01**	**LUF DA10**
Fault signalling			By LED on front panel		
External power supply		**V**	∿/⎓ 24… 240		
Module consumption		**mA**	7 at ⎓ 24 1.1 at ∿ 240		
Discrete outputs	Type		1 N/C+ 1 N/O	1 N/C	1 N/O
	AC-15		230 V max; 400 VA 100 000 operating cycles		
	DC-13		24 V; 50 W 100 000 operating cycles		
Conventional thermal current (Ith)	For ambient temperature θ < 70 °C	**A**	2		
Short-circuit protection	Conforming to IEC/EN 60947-5-1	**A**	gG fuse: 2		
Reset input	Conductor c.s.a.	**mm²**	0.2 min		
	Length	**m**	500 (R = 50 Ω , L = 52.8 mH, Cp = 93 pF)		

References : pages A4/33 to A4/35

Dimensions : pages A4/52 and A4/53

Schemes : pages A4/54 to A4/61

TeSys motor starters open version

TeSys U starter-controllers

Function modules and communication modules

Characteristics of motor load indication function module LUF V2

Analogue output			4 - 20 mA
Signal delivered			Value of I average/Ir ratio within the range of 0 to 2 for LUCB and LUCD
			Value of I average/Ir ratio within the range of 0 to 3 for LUCC
Load impedance	Minimum	kΩ	–
	Maximum	Ω	500
	Typical	Ω	100
Signal characteristics with advanced control unit	Precision		±6 %
Signal characteristics with multifunction control unit	Precision		±10 %
	Resolution		1 % of Ir
Supply			External ⎓ 24 V

Characteristics of AS-Interface communication modules ASILUF C5 and ASILUF C51

Module type			ASILUF C5	ASILUF C51
Product certification			AS-Interface V2.1 n° 52901	AS-Interface V2.1 n° 52303
AS-Interface profile			7.D.F.0	7.A.7.E
Ambient air temperature		°C	Operation -25…+70	
Cycle time		ms	5	10
Addressing			31 slaves	62 slaves
AS-Interface supply		V	29.5...31.5	
Current consumption	On the AS-Interface bus	mA	Normal operation: 25	
		mA	Fault condition: 30	
	On 24 V supply for the outputs	mA	200	
Auxiliary supply		V	⎓ 24 ±30 %	
Number of outputs			2 dedicated to starter-controller coil operation	
Switching capacity of the solid state outputs			0.5 A/24 V (outputs protected against short-circuits)	
Indication/diagnostics			By 2 LEDs on front panel	

Characteristics of Modbus communication module LUL C03●

Module type				LUL C031	LUL C033
Physical interface				RS 485 multi-drop	
Connections				RJ45 on front panel	
Protocol				Modbus RTU	
Maximum transmission speed			bit/s	19 200 (self-configuration up to this value)	
Maximum return time			ms	30	
Addressing				By switches: from 0...31	
Ambient air temperature			°C	Operation -25…+55	
Discrete inputs		Number		–	2 (to be assigned according to the configuration)
		Supply	V	–	⎓ 24
		Input current	mA	–	7
	Nominal input values	Voltage	V	⎓ 24 (positive logic)	
		Current	mA	7	
	Response time	Change to state 1	ms	10 (±30 %)	
		Change to state 0	ms	10 (±30 %)	
	Input type			Resistive	
Solid state outputs		Number		3, of which 2 dedicated to starter-controller coil operation	
		Supply	V	⎓ 24	
		Max. current	mA	500	
	Protection	gI fuse	A	1	
	Switching capacity			0.5 A/24 V	
Indication/diagnostics				By 3 LEDs on front panel	

TeSys motor starters open version

TeSys U starter-controllers

Function modules and communication modules

Characteristics of CANopen, Profibus DP and DeviceNet communication modules

Communication module				Profibus DP LUL C07	CANopen LUL C08	DeviceNet LUL C09
Services	Conformity class			NA	S 20 (Schneider Electric)	NA
	Standard			Profibus DP	CIADS-301 V4.02 DR 303-2	IEC 62026-1, overvoltage category III, degree of pollution: 3
	Profile			LVSG V1.0 MS (Motor Starter) and MMS (Motor Management Starter)	–	ODVA (Open DeviceNet Vendor Association) MS (Motor Starter)
	Protocol			Profibus DP	CAN 2.0A (2B passive)	CAN 2.0A (2B passive)
	Address			1…125	0…127 (by switches)	0…63
Structure	Physical interface			9-way SUB-D male	9-way SUB-D female	"Open Style" connector
	Binary rate			9600 Kbits/s…12 Mbits/s	10, 20, 50, 125, 250, 500 and 1000 Kbits/s (by switches)	125…500 kbaud
	Cables			2 shielded twisted pairs		
Supply for the discrete outputs and control	⎓ 24 V		V	20…28		
	Current consumption		A	1.5 (max)		
	Protection by gI fuse		A	2		
Ambient air temperature			°C	Operation -25…+55		
Logic inputs	Number			2 (to be assigned according to the configuration)		
	Supply		V	⎓ 24		
	Input current		mA	7		
	Nominal input values	Voltage	V	⎓ 24 (positive logic)		
		Current	mA	7		
	Response time	Change to state 1	ms	10 (±30 %)		
		Change to state 0	ms	10 (±30 %)		
	Input type			Resistive		
Discrete outputs	Number			3, of which 2 dedicated to starter-controller coil operation		
	Max. current		mA	500		
	Short-circuit protection			Yes		
	Switching capacity			0.5 A / ⎓ 24 V		
Indication/diagnostics				By 3 LEDs on front panel		

Characteristics of Advantys STB communication module LUL C15

Physical interface				CAN
Connections				Fire Wire
Protocol				CAN 2.0 and CAN 2.B (passive mode)
Transmission speed			kbit/s	800
Addressing				Self-addressing
Supply for the discrete outputs and control	⎓ 24 V		V	20…28
	Current consumption		A	1.5 (max)
	Protection by gI fuse		A	2
Ambient air temperature			°C	Operation -25…+55
Discrete inputs	Number			2 (to be assigned according to configuration)
	Supply		V	⎓ 24
	Input current		mA	7
	Nominal input values	Voltage	V	⎓ 24 (positive logic)
		Current	mA	7
	Response time	Change to state 1	ms	10 (± 30 %)
		Change to state 0	ms	10 (± 30 %)
	Input type			Resistive
Discrete outputs	Number			3, of which 2 dedicated to starter-controller coil operation
	Max. current		mA	500
	Short-circuit protection			Yes
	Switching capacity			0.5 A / ⎓ 24 V
Indication/diagnostics				By 3 LEDs on front panel

TeSys motor starters open version

TeSys U starter-controllers

Function modules and communication modules

Connection characteristics

Module type				LUF W10, LUF DH11, LUF DA01 and LUF DA10	LUF V2	ASILUF C5 and ASILUF C51	
						Inputs and 24 V auxiliary supply	Outputs
Connectors		Pitch		5.08	3.81	5.08	3.81
Flexible cable without cable end		1 conductor	mm²	0.2…1.5	0.14…1	0.2…1.5	0.14…1
		2 identical conductors	mm²	0.2…1	0.14…0.75	0.2…1	0.14…0.75
Flexible cable with cable end	Without insulated ferrule	1 conductor	mm²	0.25…1.5	0.25…1	0.25…1.5	0.25…1
		2 identical conductors	mm²	0.25…1	0.25…0.34	0.25…1	0.25…0.34
	With insulated ferrule	1 conductor	mm²	0.25…1.5	0.25…0.5	0.25…1.5	0.25…0.5
		2 identical conductors (Use a double cable end)	mm²	0.5…1	0.5	0.5…1	0.5
Solid cable without cable end		1 conductor	mm²	0.2…1.5	0.14…1	0.2…1.5	0.14…1
		2 identical conductors	mm²	0.2…1	0.14…0.5	0.2…1	0.14…0.5
Conductor size		1 conductor		AWG 24… AWG 16	AWG 26… AWG 16	AWG 24… AWG 16	AWG 26… AWG 16
Tightening torque			N.m	0.5…0.6	0.20…0.25	0.5…0.6	0.20…0.25
Flat screwdriver			mm	3.5	2.5	3.5	2.5

Module type				LUL C031, LUL C033, LUL C08 and LUL C15	LUFC 00	LUL C09	
						Inputs and 24 V auxiliary supply	Connection on the bus
Connectors		Pitch		3.81	3.81	3.81	5 (Open Style) DeviceNet
Flexible cable without cable end		1 conductor	mm²	0.14…1	0.14…1	0.14…1	0.2…2.5
		2 identical conductors	mm²	0.14…0.75	0.14…0.75	0.14…0.75	0.5…1.5
Flexible cable with cable end	Without insulated ferrule	1 conductor	mm²	0.25…1	0.25…1	0.25…1	0.25…2.5
		2 identical conductors	mm²	0.25…0.34	0.25…0.34	0.25…0.34	0.25…1
	With insulated ferrule	1 conductor	mm²	0.25…0.5	0.25…0.5	0.25…0.5	0.25…2.5
		2 identical conductors (Use a double cable end)	mm²	0.5	0.5	0.75	0.5…1.5
Solid cable without cable end		1 conductor	mm²	0.14…1	0.14…1	0.14…1	0.2…2.5
		2 identical conductors	mm²	0.14…0.5	0.14…0.5	0.14…0.5	0.14…0.5
Conductor size		1 conductor		AWG 26… AWG 16	AWG 26… AWG 16	AWG 26… AWG 16	AWG 24… AWG 16
Tightening torque			N.m	0.20…0.25	0.20…0.25	0.20…0.25	0.5…0.6
Flat screwdriver			mm	2.5	2.5	2.5	3.5

TeSys U

Tripping curves for control units LUCA, LUCB, LUCD

Average operating times at 20 °C according to multiples of the setting current, tolerance : ± 20 %.

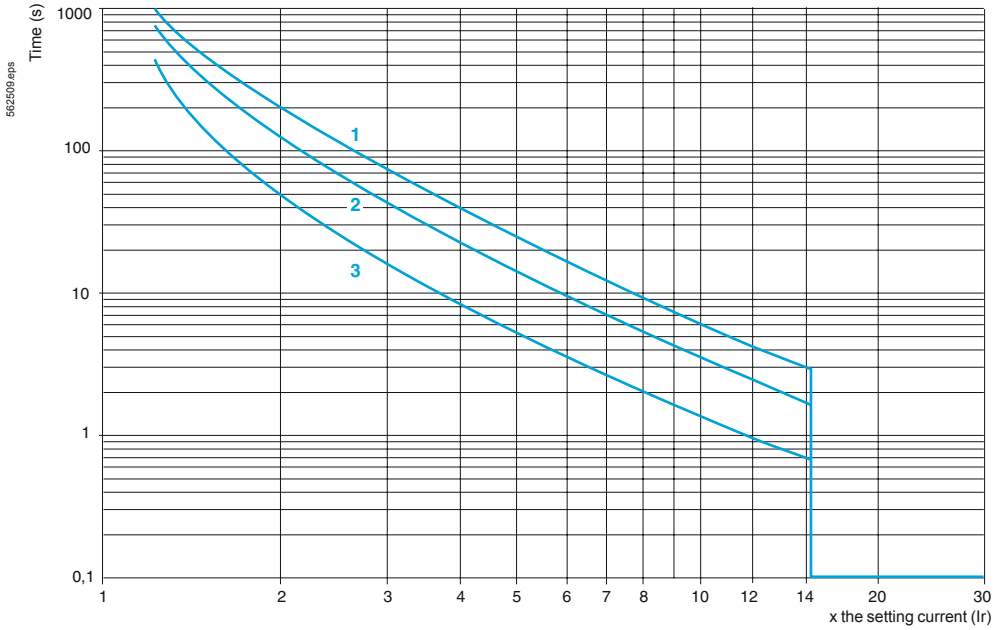

1 LUCD, 3 poles from cold state, class 20.
2 LUCA, LUCB, 3 poles from cold state, class 10.
3 LUCA, LUCB, LUCD, 3 poles from hot state.

Tripping curves for control units LUCC

Average operating times at 20 °C according to multiples of the setting current, tolerance : ± 20 %.

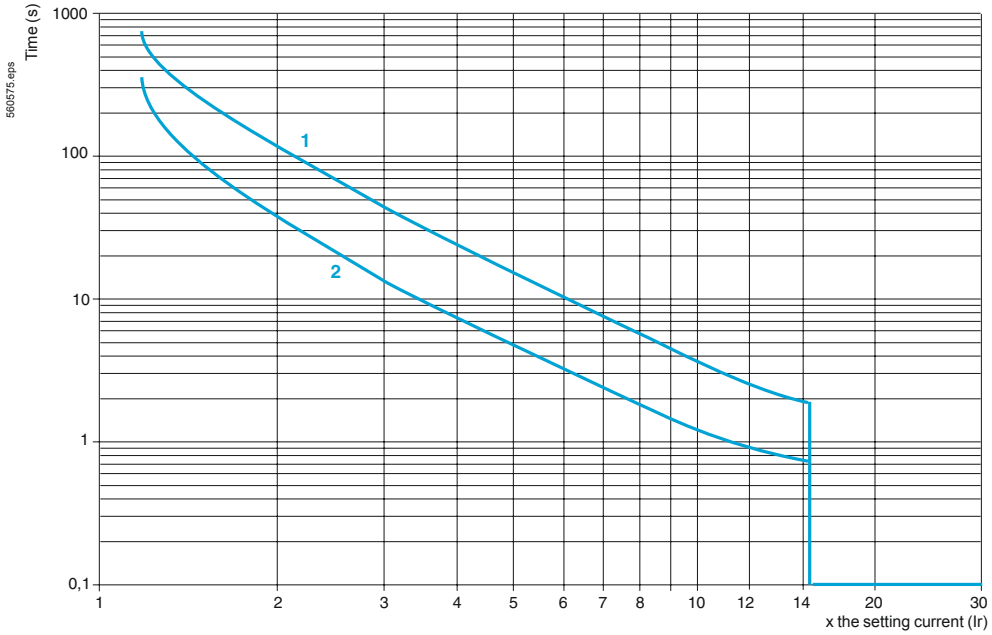

1 LUCC, single-phase, cold state.
2 LUCC, single-phase, hot state.

References :
page A4/12

TeSys U

Tripping curves for control units LUCM

Cold state curves

Average operating times at 20 °C according to multiples of the setting current, tolerance : ± 20 %.

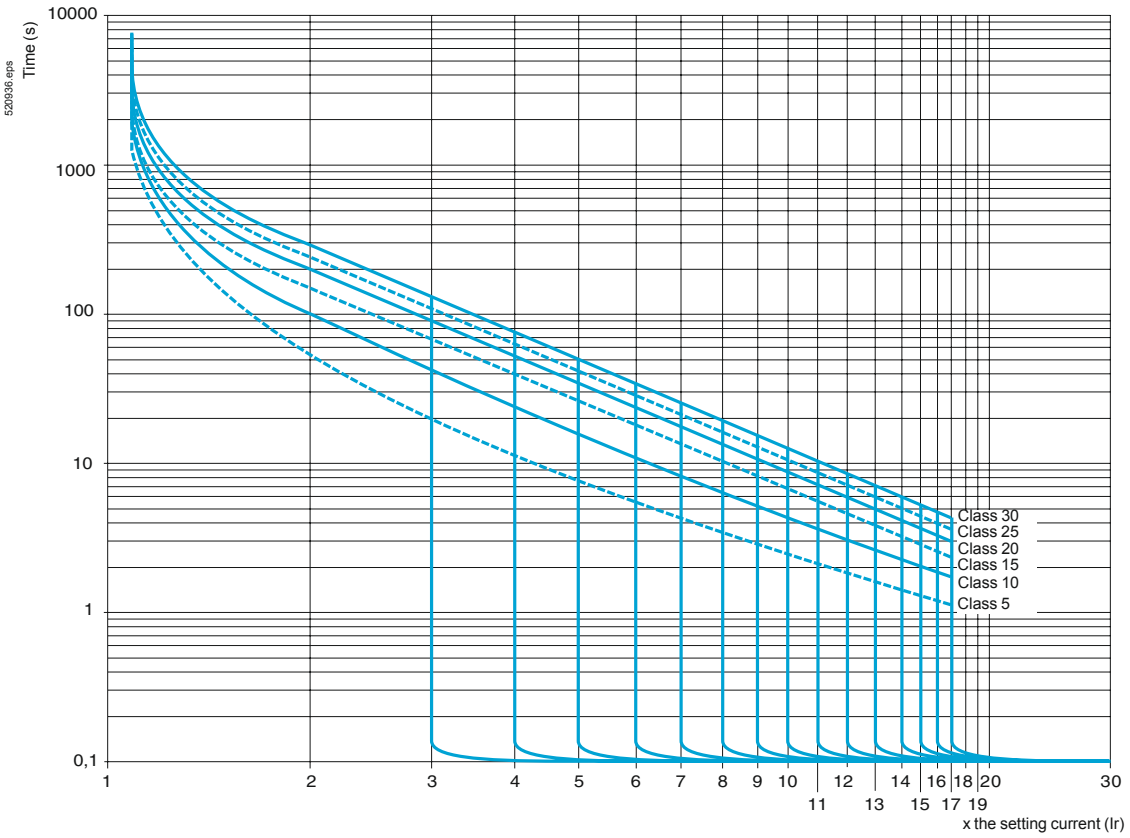

References :
page A4/12

TeSys U

Tripping curves for control units LUCM

Hot state curves

Average operating times at 20 °C according to multiples of the setting current, tolerance : ± 20 %

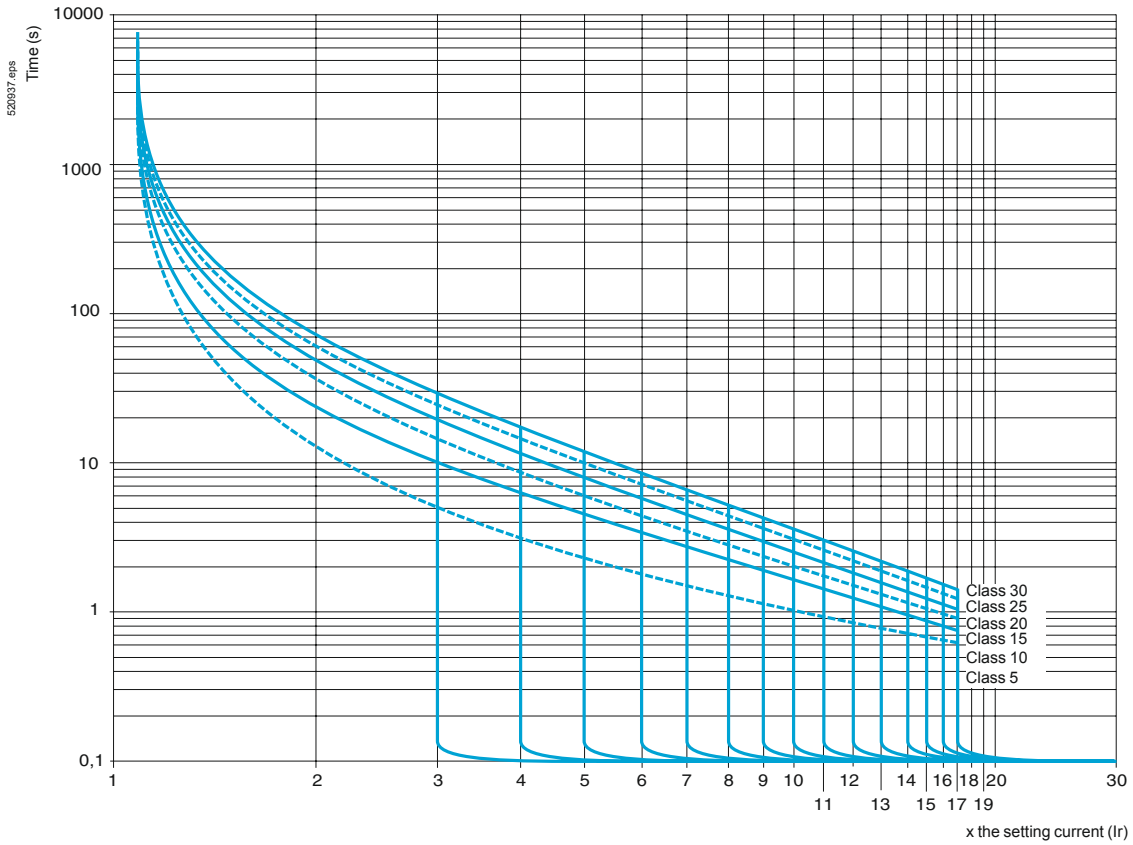

References :
page A4/70

TeSys U

Current limitation on short-circuit

U_e = 460 V

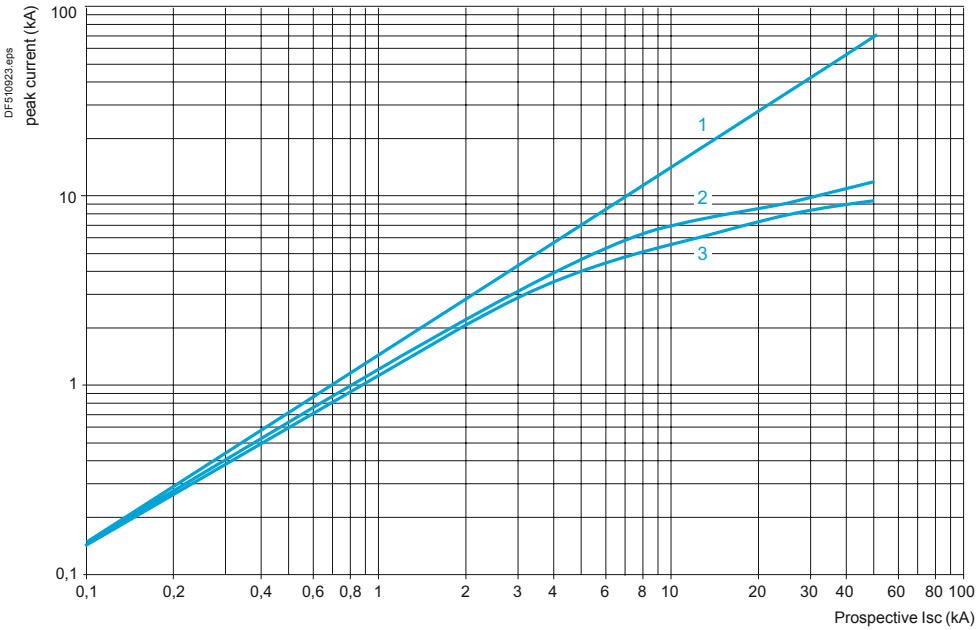

1 Maximum peak current
2 32 A power base
3 12 A power base

Thermal limit on short-circuit

U_e = 460 V

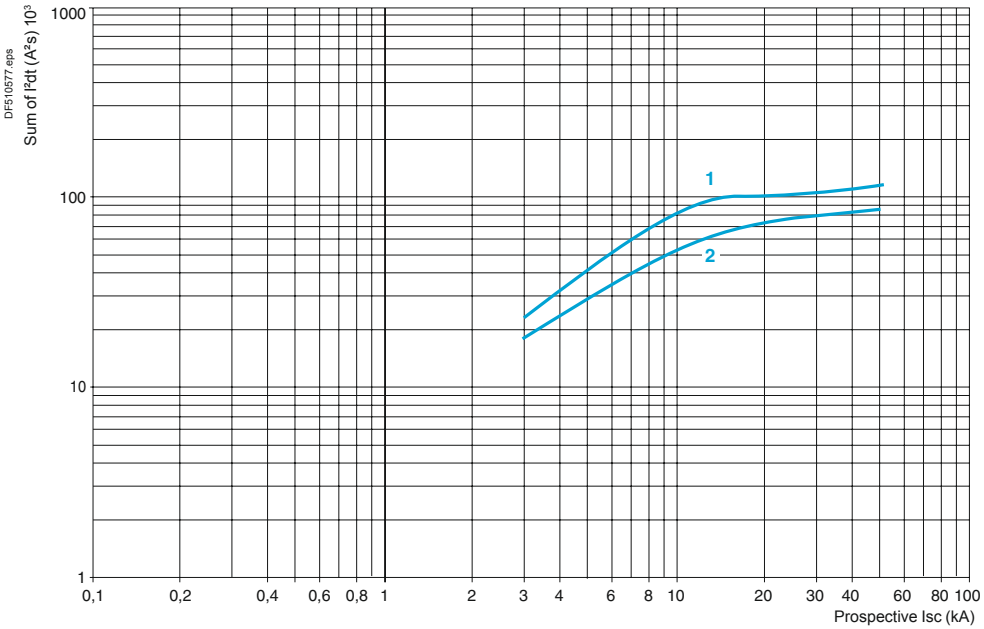

1 32 A power base
2 12 A power base

References :
pages A4/10 to A4/12

TeSys U

Use in category AC-41

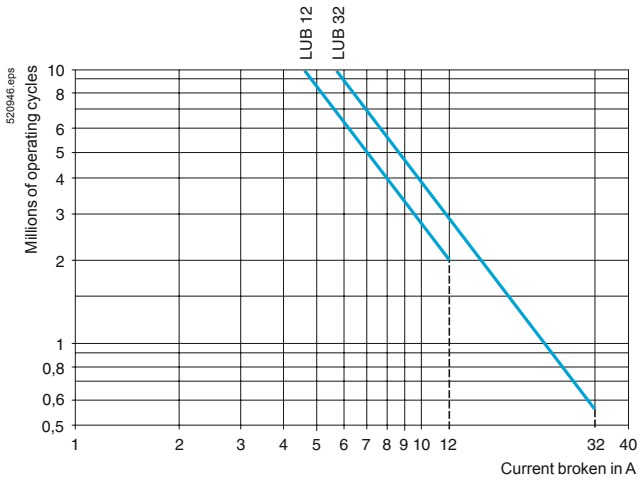

Use in category AC-43

Ue ⩽ 440 V

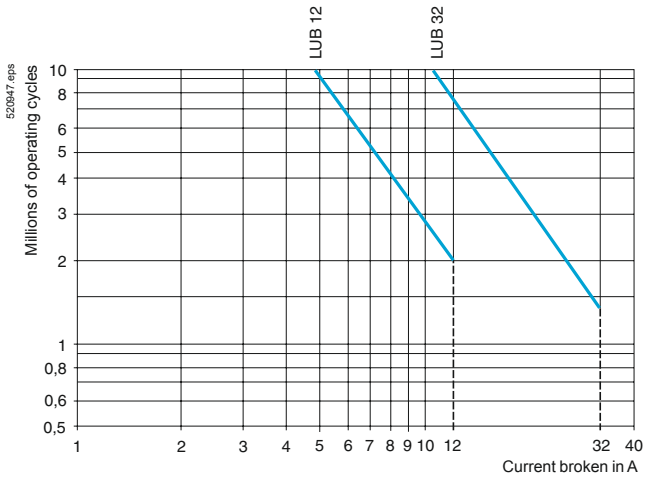

Ue = 690 V

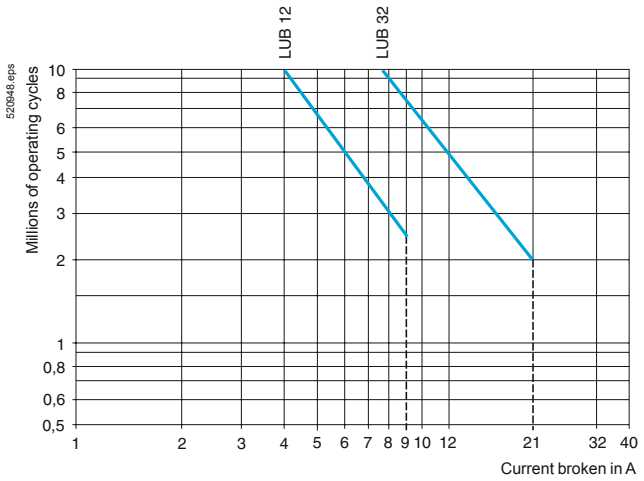

References :
pages A4/10 to A4/12

TeSys U

Use in category AC-44

Ue ≤ 440 V

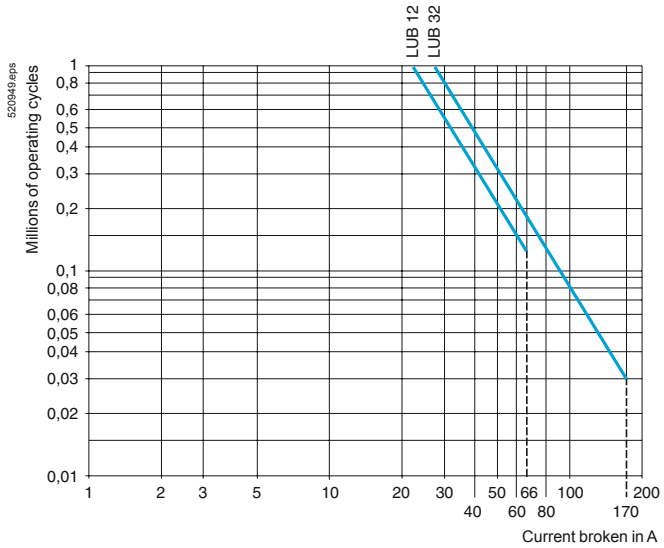

Ue = 690 V

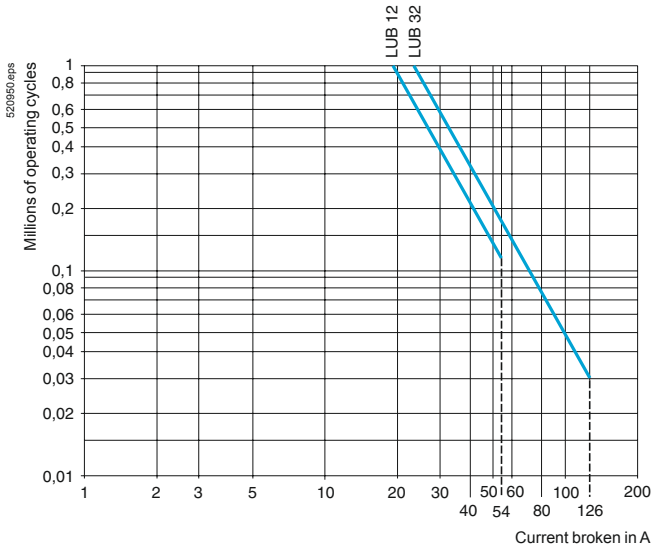

TeSys U

References :
pages A4/10 to A4/12

TeSys U

Dimensions

Starter-controllers

LUB: non-reversing

Rail mounting

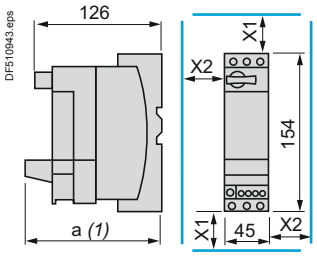

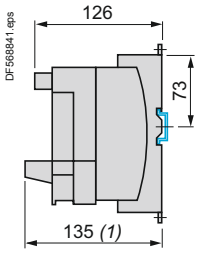

Screw fixing

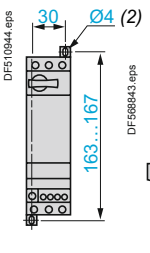

	a
With Modbus module	135
With Advantys STB, CANopen, Profibus DP or DeviceNet modules	147

Minimum electrical clearance:
X1 = 50 mm for Ue = 440 V and 70 mm for Ue = 500 and 690 V, X2 = 0

LU2B: reversing

Rail mounting

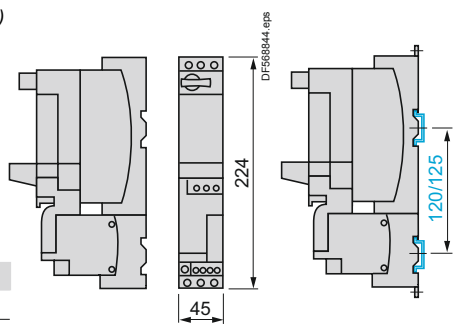

Screw fixing

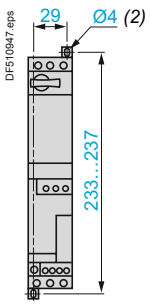

Reverser block for mounting separately from power base

Rail mounting

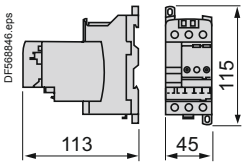

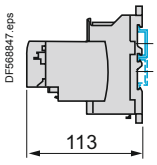

Screw fixing

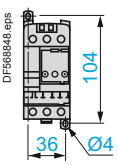

Sets of busbars and plug-in power sockets

GV2 G445 and GV2 G454

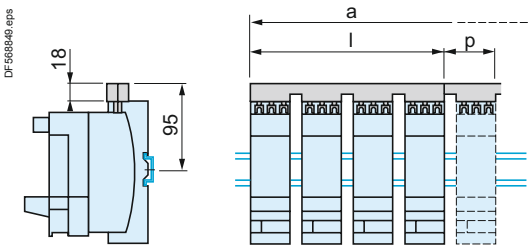

	l	P
GV2 G445 (2 x 45)	179	45
GV2 G454 (2 x 54)	206	54

	a			
Number of tap-offs	5	6	7	8
GV2 G445 (2 x 45)	224	269	314	359
GV2 G454 (2 x 54)	260	314	368	422

GV2 G●●● with terminal block GV1 G09

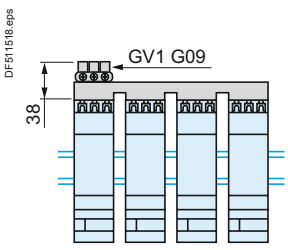

GV2 G554

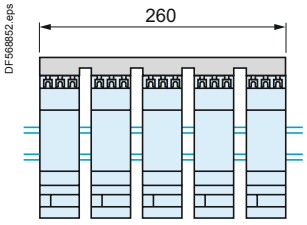

GV2 G245 and GV2 G254

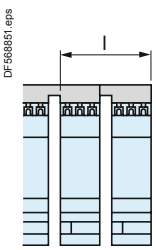

	l
GV2 G245 (2 x 45)	89
GV2 G254 (2 x 54)	98

GV2 G345 et G354

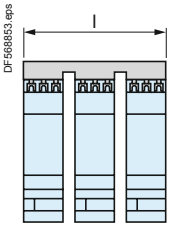

	l
GV2 G345 (2 x 45)	**134**
GV2 G354 (2 x 54)	**152**

AK5 JB144

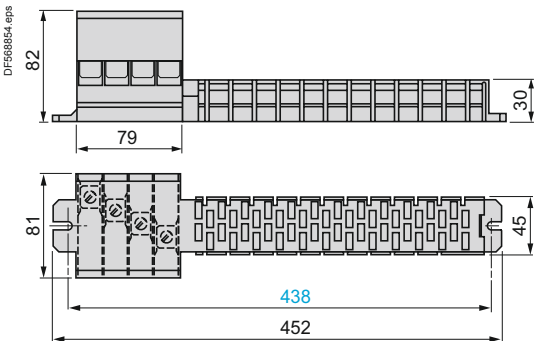

AK5 PC13, PC33, PC33L

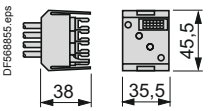

(1) Depth with communication module.
(2) Retractable fixing lugs.

Dimensions, mounting

Limiter-disconnector LUA LB1
Disconnector LUA LB10

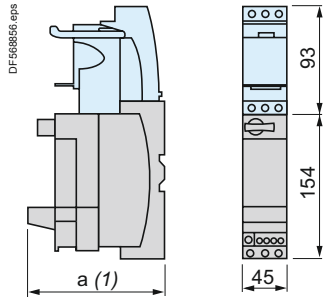

	a
With Modbus module	135
With Advantys STB, CANopen, Profibus DP or DeviceNet modules	147

Current limiter LA9 LB920

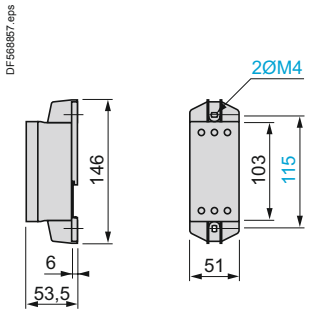

Door interlock mechanisms
LU9 APN21, LU9 APN22, LU9 APN24

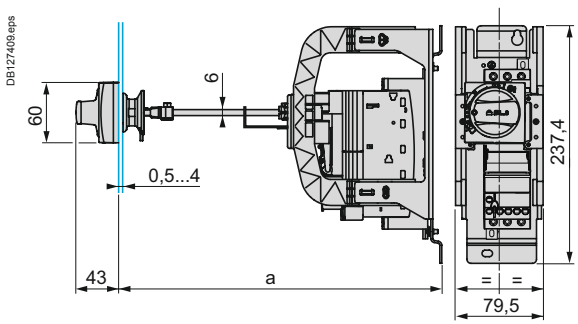

Door cut-out

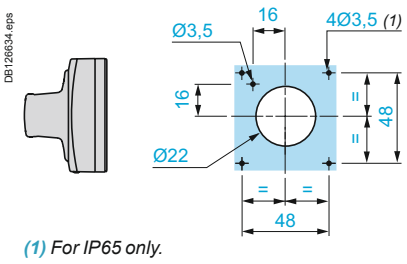

(1) For IP65 only.

	a	
	Mini	Maxi
LU9 APN●●	191	300
LU9 APN●● + GV APK12	300	483

Addressing consoles
XZ MC11

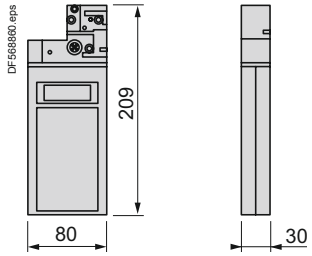

ASI TERV2

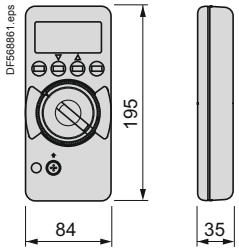

Splitter boxes
LU9 GC3 (Modbus) LU9 G02 and LU9 G03

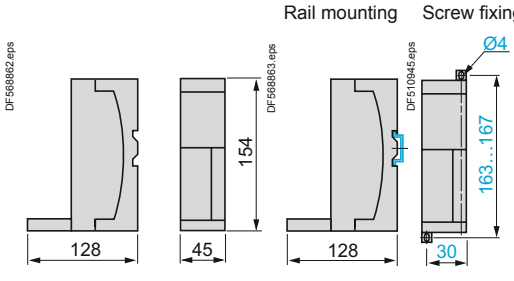

LU9 GC7 (Profibus DP)

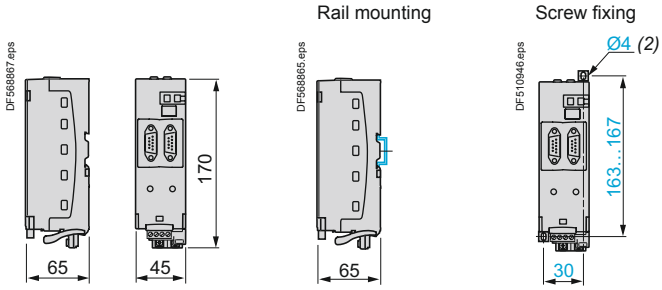

(1) Depth with communication module.
(2) Retractable fixing lugs.

TeSys motor starters - open version
TeSys U starter-controllers

TeSys U

Starter-controllers, 12 or 32 A with standard, advanced or multifunction control unit

LUB
Non-reversing

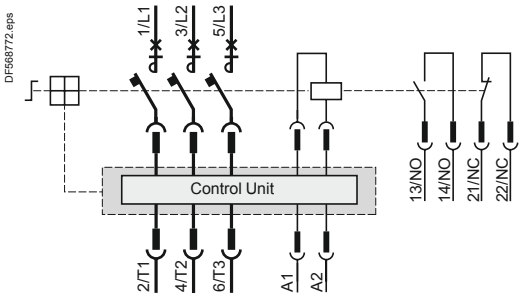

With control unit LUCC or LUCM
Connection of a single-phase motor

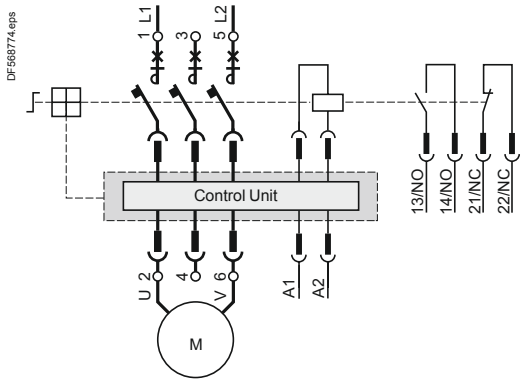

LU2B
Reversing

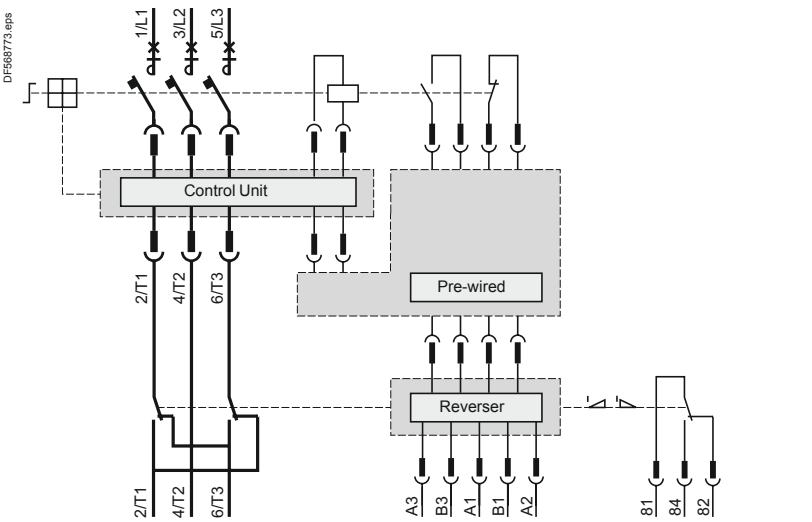

Control terminal block

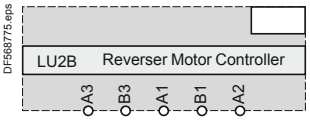

Reverser blocks

LU2M

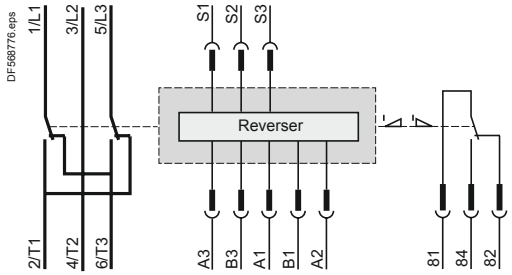

Control terminal block

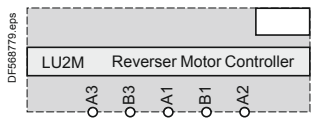

LU6M
Control terminal blocks

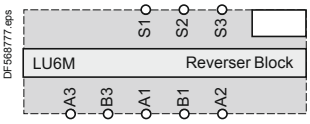

With pre-wired connector LU9 MRC

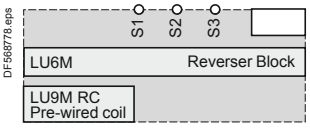

Basic scheme

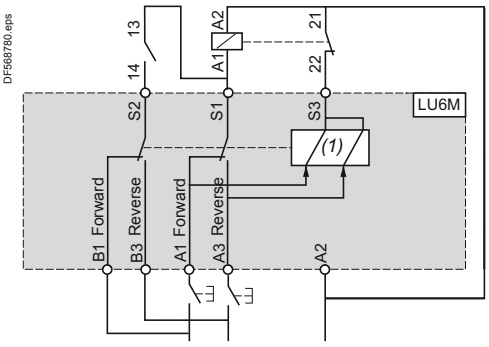

S1 *Start next stage*
S2 *Electrical interlocking*
S3 *Maintaining contact*
B1 *Maintain forward running*
B3 *Maintain reverse running*
A1 *Pulse forward running*
A2 *Common*
A3 *Pulse reverse running*
(1) Electronically operated bistable electromagnet.

Add-on contact blocks

LUA1 C11

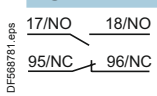

LUA1 C20

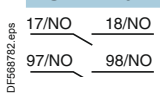

LUA8 E20

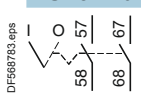

Add-on contact modules

LUFN 20

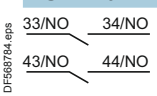

LUFN 11

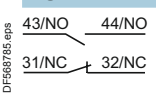

LUFN 02

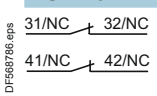

TeSys U

Control units

Standard control units LUCA

Basic scheme

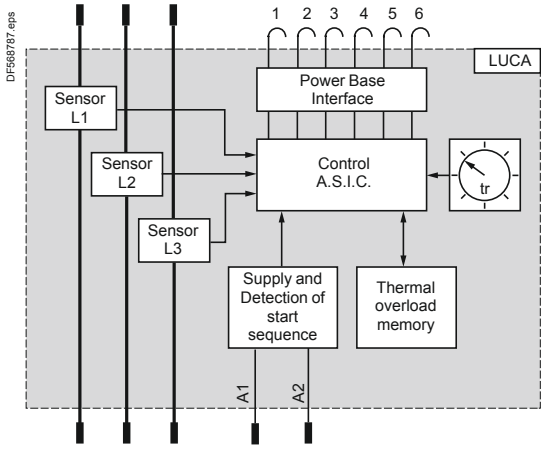

1 and 2 Trips
3 and 4 Electromagnet
5 Power base rating
6 N/C

Advanced control units LUCB, LUCC, LUCD

Basic schemehd

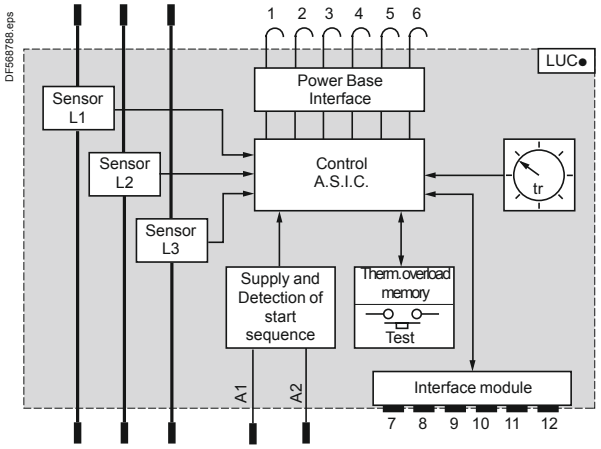

1 and 2 Trips
3 and 4 Electromagnet
5 Power base rating
6 N/C
7 Earth
8 Thermal status/Set
9 Reset mode/Reset
10 (Im/Ir)
11 Vc2
12 Vc1

Multifunction control units LUCM

Control terminal block

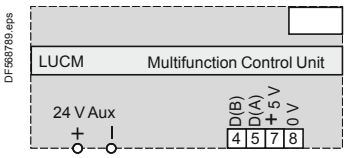

Basic scheme

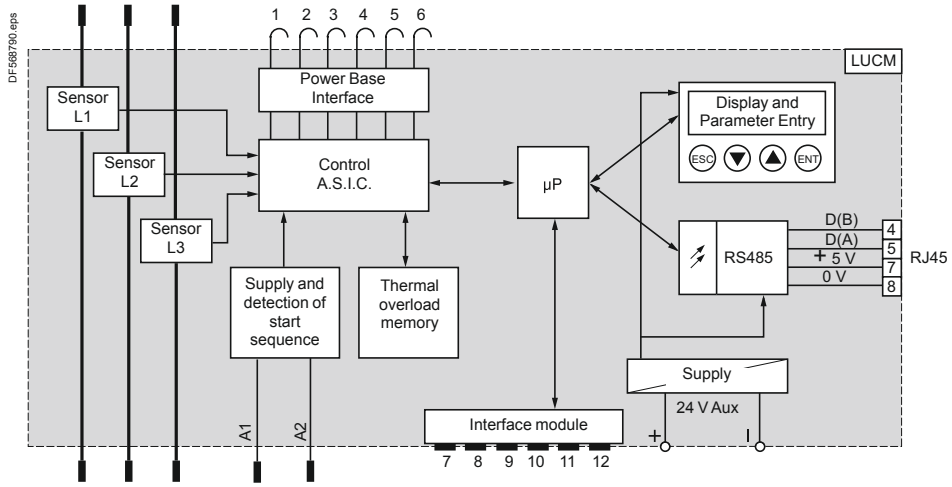

1 and 2 Trips
3 and 4 Electromagnet
5 Power base rating
6 N/C
7 Earth
8 N/C
9 Earth
10 (Im/Ir)
11 Rx/Tx
12 Vc1

TeSys U

Function modules

Alarm
LUF W10

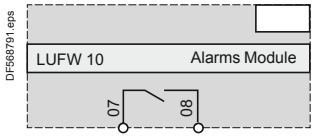

Basic scheme

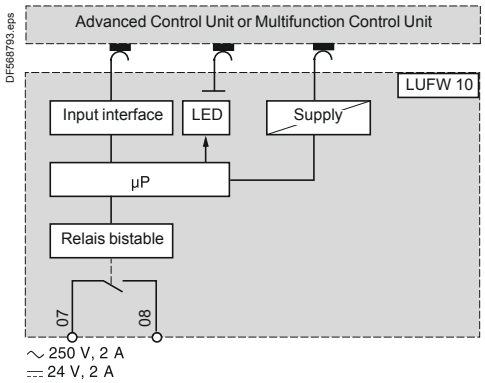

Indication of motor load
LUF V2

4-20 mA output

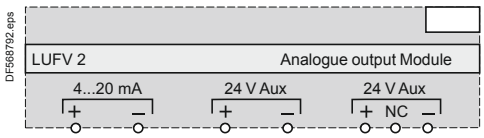

Basic scheme

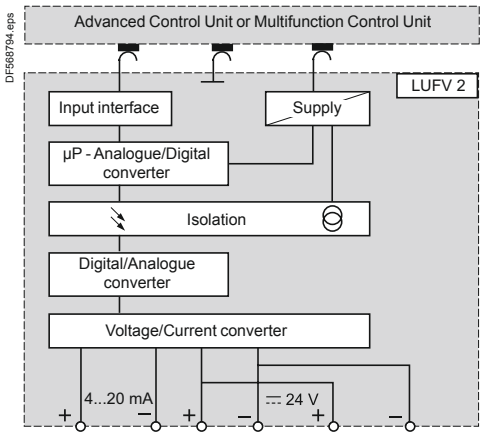

100 Ω < load < 500 Ω ⎓ 30 V max and 40 mA min

Communication modules

Communication modules ASILUF C5 and ASILUF C51

Without pre-wired coil connection

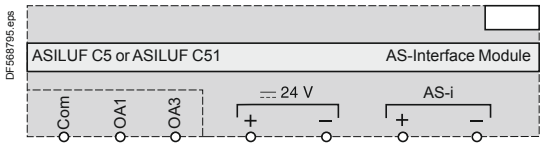

With pre-wired coil connection LU9B N11C

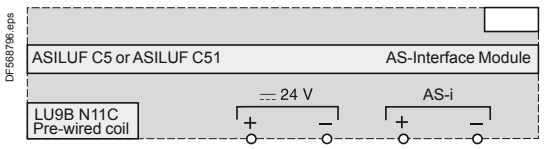

With pre-wired coil connection LU9M RC

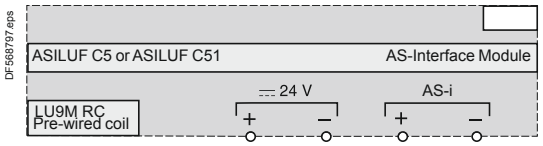

Basic scheme

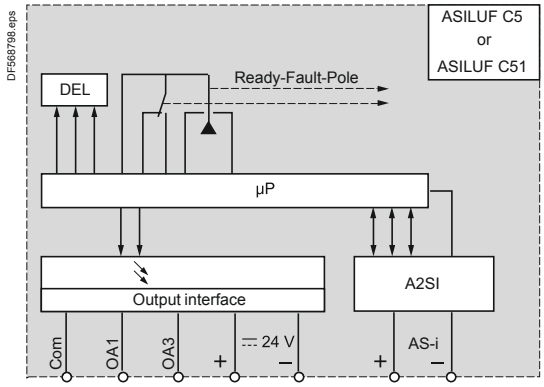

TeSys U

Communication modules (continued)

Modbus communication module LUL C031

Without pre-wired coil connection

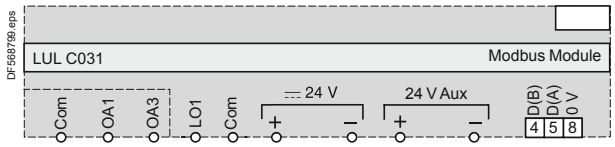

With pre-wired coil connection LU9B N11C

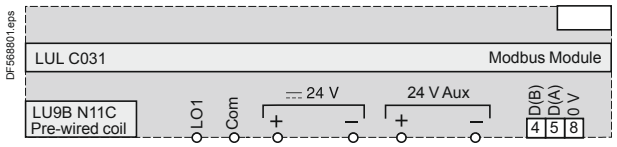

With pre-wired coil connection LU9M RC

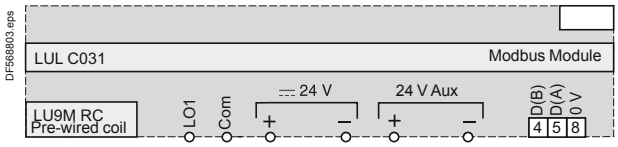

Basic scheme

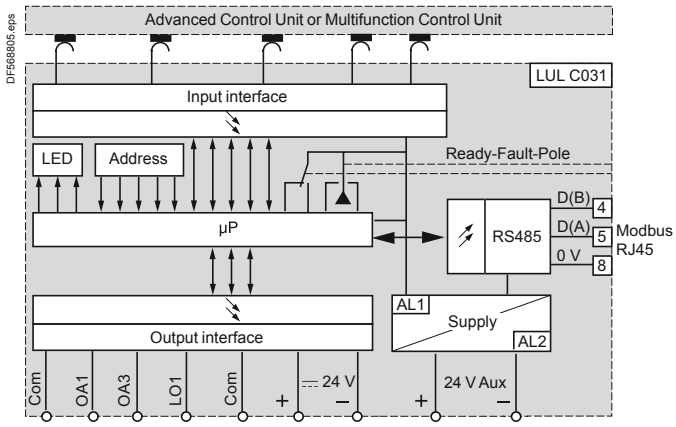

Modbus communication module LUL C033

Without pre-wired coil connection

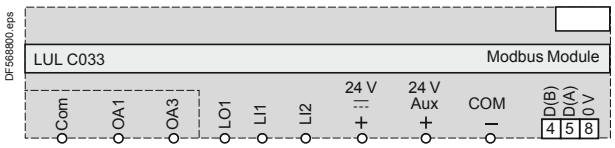

With pre-wired coil connection LU9B N11C

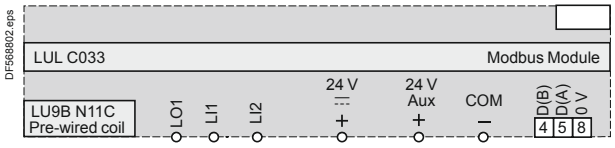

With pre-wired coil connection LU9M RC

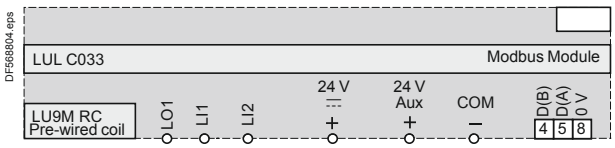

Basic scheme

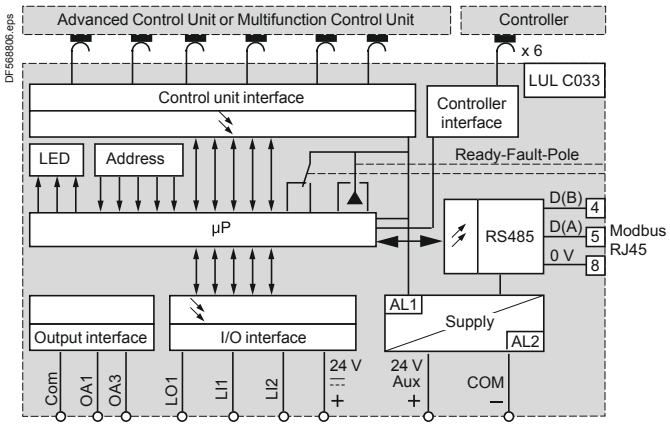

TeSys U

Communication modules (continued)

Profibus DP communication module LUL C07

Without pre-wired coil connection

DF568807.eps

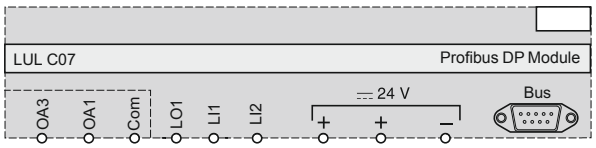

With pre-wired coil connection LU9B N11LC

DF568809.eps

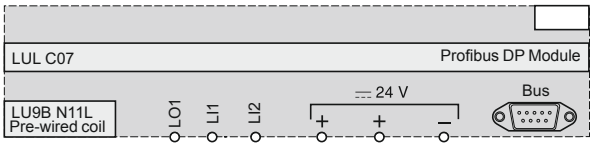

With pre-wired coil connection LU9M RC

DF568811.eps

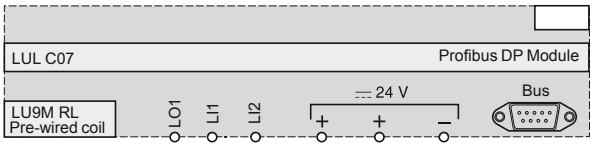

Basic scheme

DF568813.eps

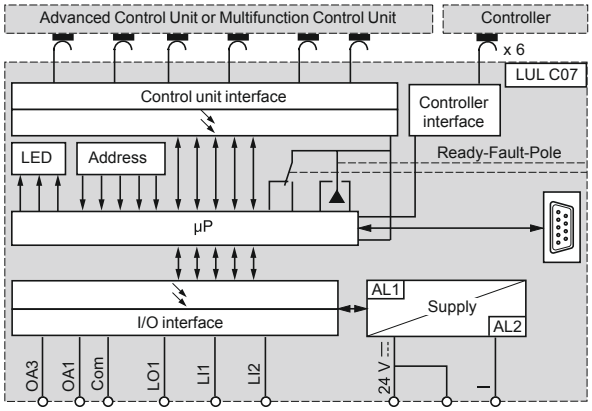

CANopen communication module LUL C08

Without pre-wired coil connection

DF568808.eps

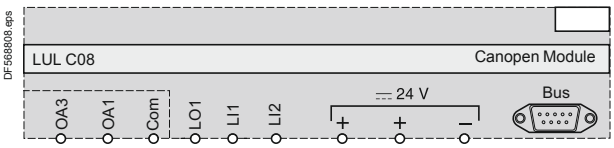

With pre-wired coil connection LU9B N11LC

DF568810.eps

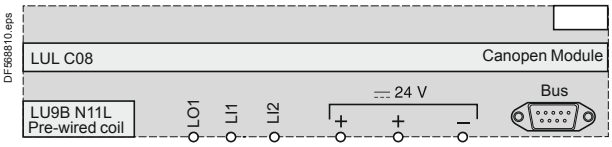

With pre-wired coil connection LU9M RC

DF568812.eps

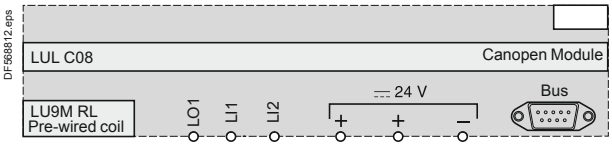

Basic scheme

DF568814.eps

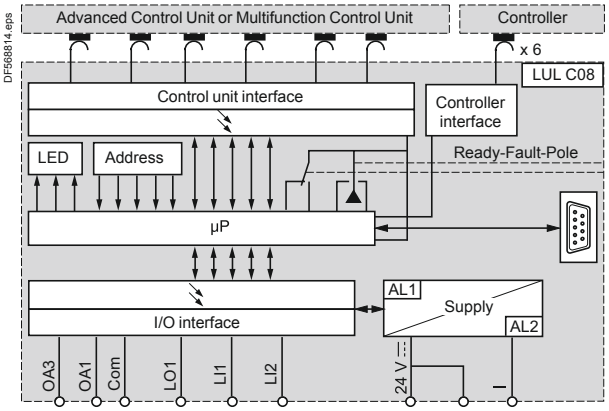

DeviceNet communication module LUL C09

Without pre-wired coil connection

DF568815.eps

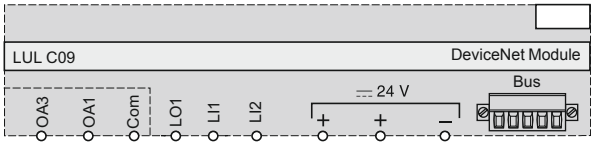

With pre-wired coil connection LU9B N11LC

DF568817.eps

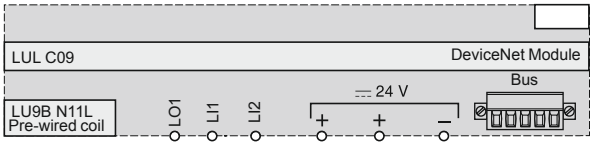

With pre-wired coil connection LU9M RL

DF568818.eps

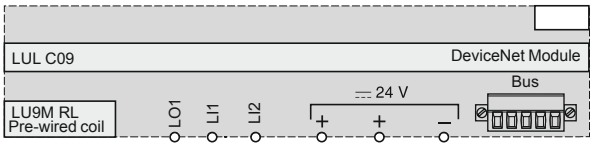

Basic scheme

DF5109952.eps

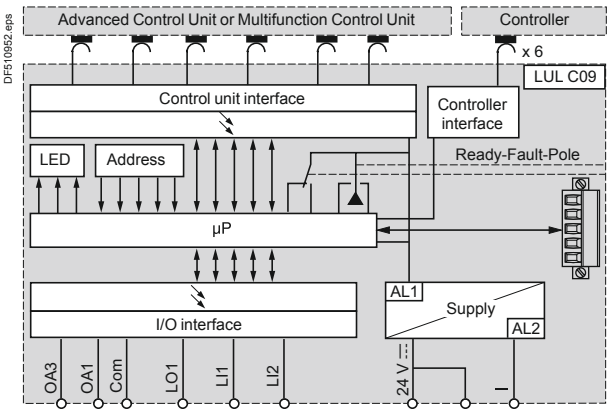

Communication modules (continued)

Advantys STB communication module LUL C15

Without pre-wired coil connection

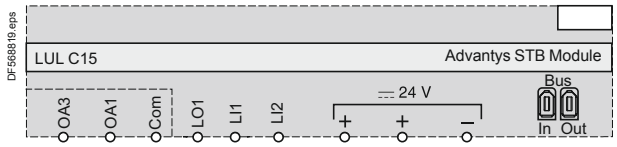

With pre-wired coil connection LU9B N11LC

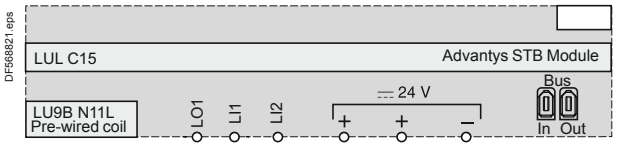

With pre-wired coil connection LU9M RC

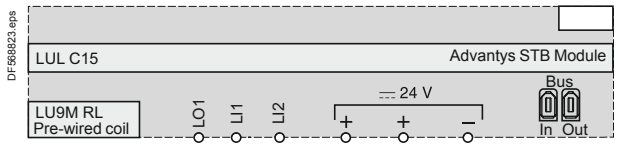

Basic scheme

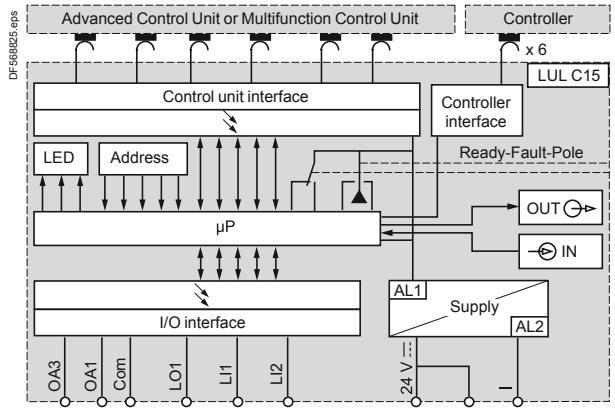

Parallel wiring modules

Without pre-wired coil connection

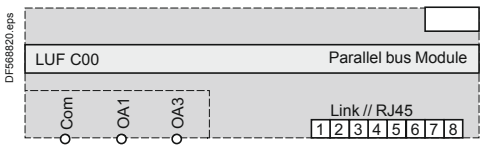

With pre-wired coil connection LU9B N11LC

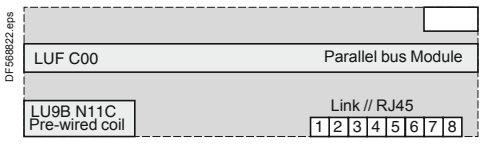

With pre-wired coil connection LU9M RC

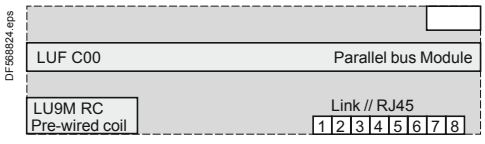

Basic scheme

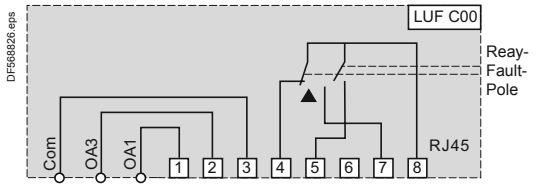

1 Forward running
2 Reverse running
3 Output common
4 Selector in position ⏻
5 Pole state
6 Reserved
7 Fault
8 Input common

Profibus DP power supply module LU9 GC7

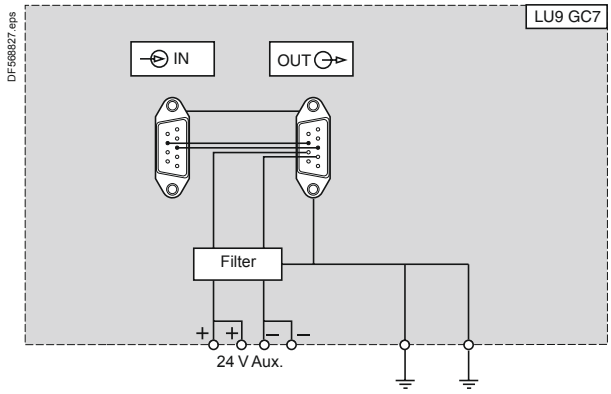

Communication modules (continued)

Wiring hub and splitter boxes

Modbus hub LU9GC3

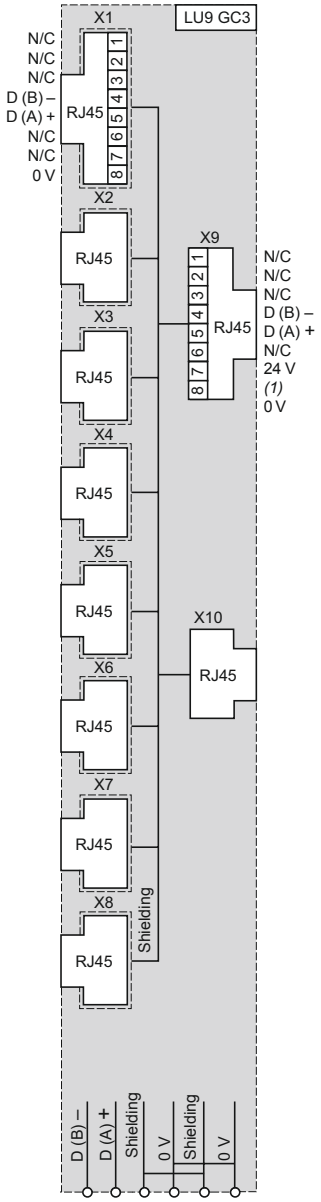

Parallel wiring splitter box LU9 G02

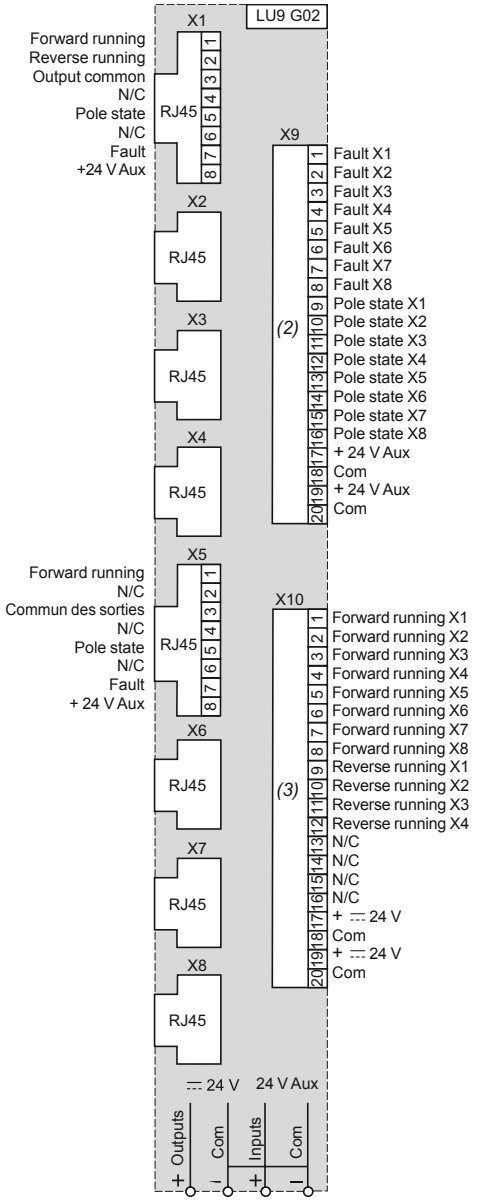

Parallel wiring splitter box LU9 G03

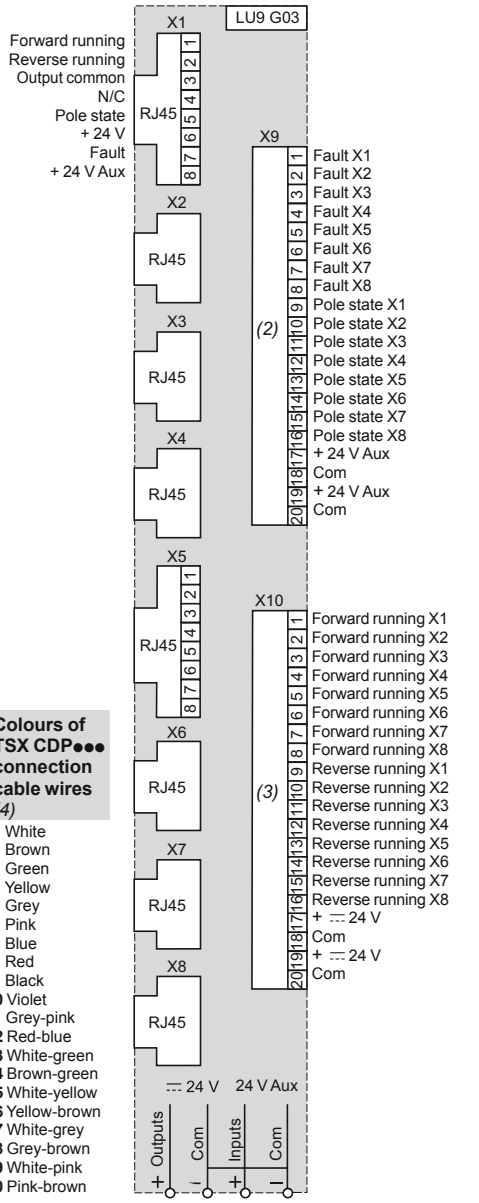

Colours of TSX CDP●●● connection cable wires *(4)*

1	White
2	Brown
3	Green
4	Yellow
5	Grey
6	Pink
7	Blue
8	Red
9	Black
10	Violet
11	Grey-pink
12	Red-blue
13	White-green
14	Brown-green
15	White-yellow
16	Yellow-brown
17	White-grey
18	Grey-brown
19	White-pink
20	Pink-brown

(1) Not connected on connectors X1 to X8. Only present on RJ45 IN and OUT connectors.
(2) 20-way HE10 input connector.
(3) 20-way HE10 output connector.
(4) Wire colours and corresponding HE10 connector pin numbers.

Gateways

LUF P1

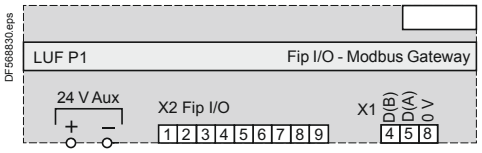

LUF P7

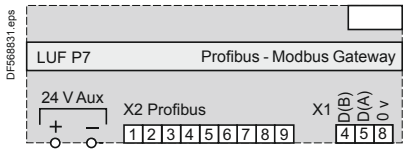

LUF P9

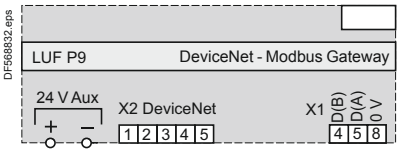

TeSys U

Data profile under AS-Interface						
Control unit present in the product				Standard LUCA	Advanced LUCB, CC, CD	Multifunction LUCM
Status		D0	Ready (available)	■	■	■
		D1	Poles closed (running)	■	■	■
Commands		D0	Start - forward running	■	■	■
		D1	Start - reverse running	■	■	■

Main registers accessible with Modbus, CANopen, Advantys STB, Profibus DP and DeviceNet communication modules.						
For other registers and for further information, please consult the User's Manual *Communication variables* on the website www.schneider-electric.com						
Control unit present in the product				Standard	Advanced	Multifunction
Marking	Register 0…Register 99	Words…Bits	Commercial reference, serial number, software version	■	■	■
Log	Register 100…Register 450	Words…Bits	Fault log, Operating log, Log of last 5 trips	■	■	■
Status	Register 451…Register 464	Words…Bits	Alarm signalling (bits), Fault signalling (bits)	■	■	■
Values	Register 465…Register 473	Words	Irms phase 1, phase 2, phase 3. Motor load, thermal status Earth leakage current. Phase imbalance and phase failure	■	■	■
	Register 474…Register 599	Words…Bits	Reserved	■	■	■
Configuration	Register 600…Register 699	Words…Bits	Protection and alarm thresholds, fallback mode and reset mode	■	■	■
Commands	Register 700…Register 714	Words…Bits	Commands	■	■	■

Status and values	Register 452	Bit 0	Short-circuit fault	■	■	■
		Bit 1	Overcurrent fault	■	■	■
		Bit 2	Thermal overload fault	■	■	■
	Register 455	Bit 0	Ready (available)	■	■	■
		Bit 1	Poles closed	■	■	■
		Bit 2	Fault	■	■	■
		Bit 3	Alarms	■	■	■
		Bit 4	Tripped ("TRIP" position)	■	■	■
		Bit 5	Fault acknowledgement allowed	■	■	■
		Bit 6	Reserved	■	■	■
		Bit 7	Motor running	■	■	■
		Bit 8	Motor current % (bit 0)	■	■	■
		Bit 9	Motor current % (bit 1)	■	■	■
		Bit 10	Motor current % (bit 2)	■	■	■
		Bit 11	Motor current % (bit 3)	■	■	■
		Bit 12	Motor current % (bit 4)	■	■	■
		Bit 13	Motor current % (bit 5)	■	■	■
		Bit 14	Reserved	■	■	■
		Bit 15	Motor starting	■	■	■
	Register 461	Bit 3	Thermal overload alarm	■	■	■
	Register 465	Word	Thermal status value	■	■	■
	Register 466	Word	Motor load value (Im/Ir)	■	■	■

Configuration	Register 602	Bit 0	Manual reset on thermal overload fault	■	■	■
		Bit 1	Remote reset on thermal overload fault	■	■	■
		Bit 2	Automatic reset on thermal overload fault	■	■	■
	Register 682	Value 0	Fallback mode validation	■	■	■
		Value 1	Outputs OA1 and OA3 unchanged	■	■	■
		Value 2	Outputs OA1 and OA3 forced to 0	■	■	■
		Value 3	Outputs OA1 and OA3 unchanged, signalling existence of communication failure	■	■	■
		Value 4	Outputs OA1 forced to 1 and OA3 unchanged	■	■	■
		Value 5	Outputs OA3 forced to 1 and OA1 unchanged	■	■	■

Commands	Register 700	Bit 0	LO1 output command	■	■	■
	Register 704	Bit 0	OA1 output command	■	■	■
		Bit 1	OA3 output command	■	■	■
		Bit 2	Reserved	■	■	■
		Bit 3	Fault acknowledgement	■	■	■
		Bit 4	Reserved	■	■	■
		Bit 5	Trip test	■	■	■
		Bit 6…15	Reserved	■	■	■

■ *Data accessible*

TeSys motor starters - open version

TeSys U starter-controllers

Non-reversing

TeSys U

Non-reversing starter-controllers LUB

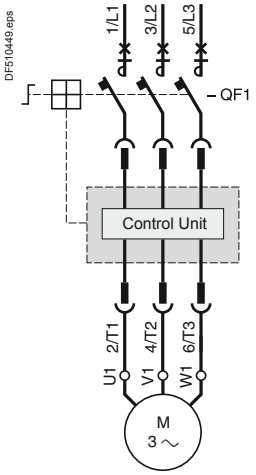

2-wire control via 2-position switch

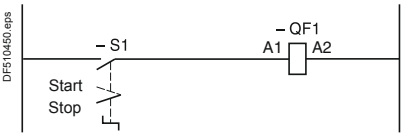

3-wire control, pulsed start with maintaining contact

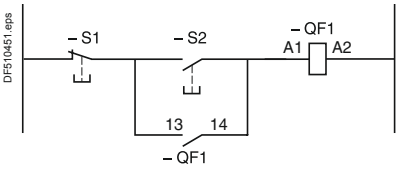

Connection of a motor load indicator module LUFV 2

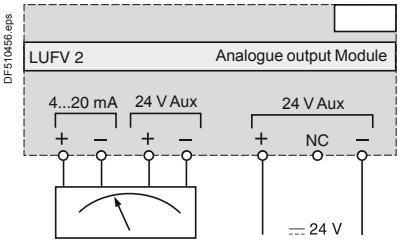

Connection of thermal overload fault signalling modules LUF DA10

Automatic reset

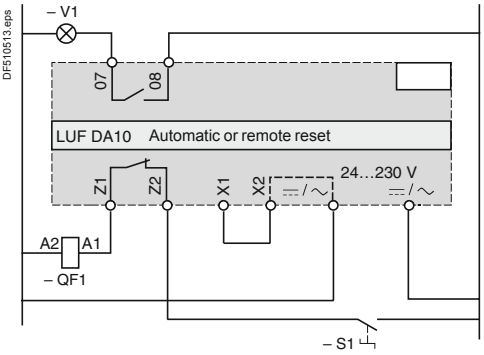

Remote reset

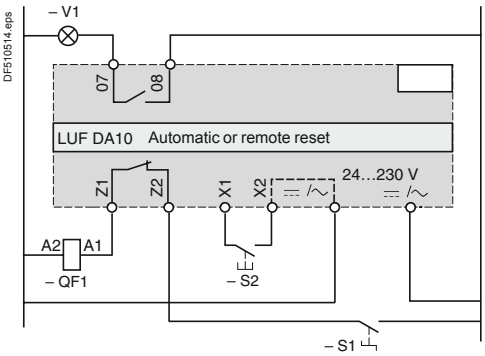

Control via Modbus communication module LUL C031

Without pre-wired coil connection

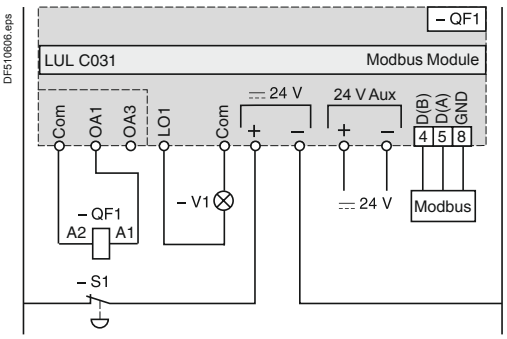

Control via Modbus communication module LUL C033

Without pre-wired coil connection

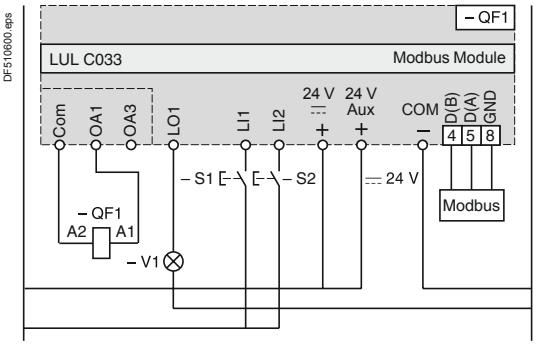

Non-reversing starter controllers LUB (continued)

Control by communication modules ASILUF C5 and ASILUF C51

Without pre-wired coil connection

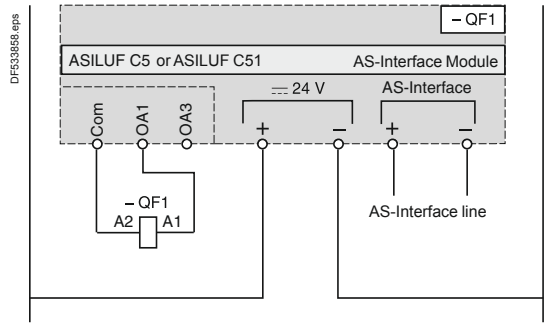

Without pre-wired coil connection
With local control

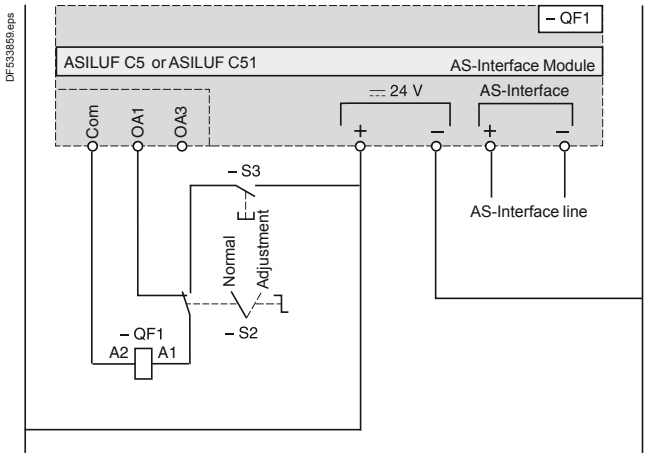

With pre-wired coil connection LU9B N11C

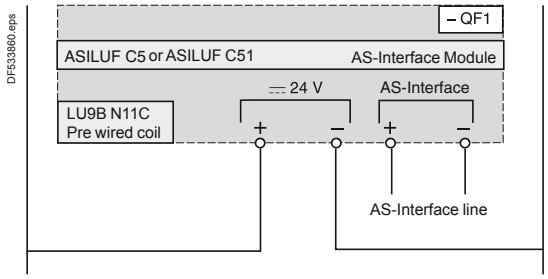

Without pre-wired coil connection
With local control

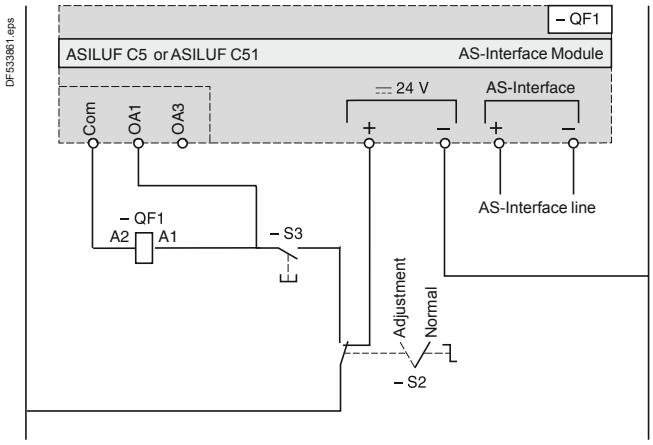

Without pre-wired coil connection
With multifunction control unit LUCM

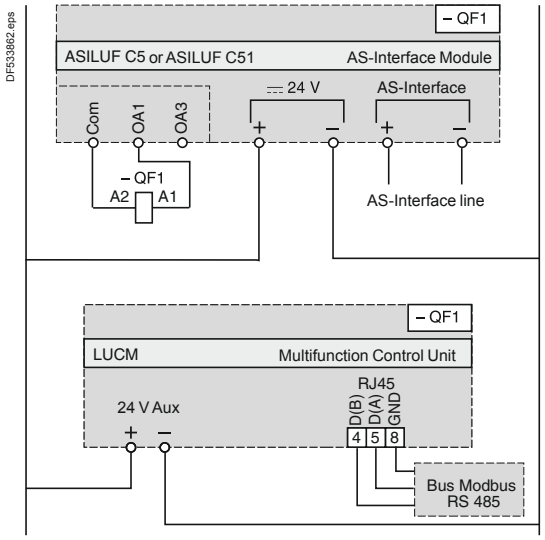

TeSys motor starters – open version

TeSys U starter-controllers

Reversing

TeSys U

Reversing starter-controllers LUB

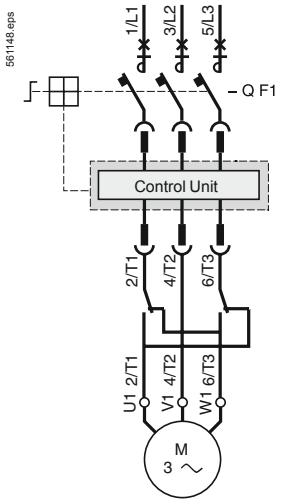

2-wire control via 3-position switch

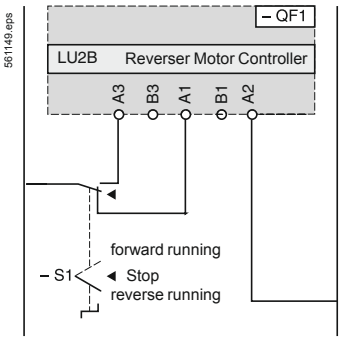

3-wire control, pulsed start with maintaining contact

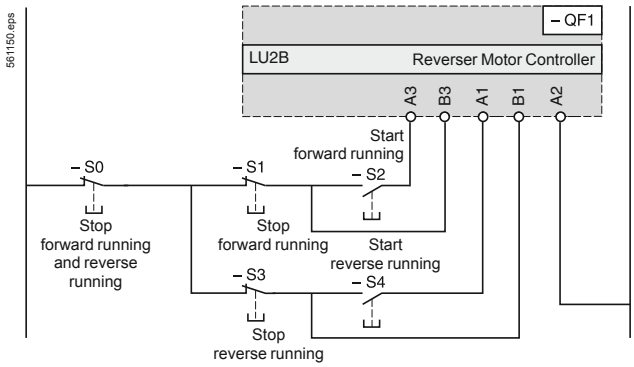

Control by communication modules ASILUF C5 and ASILUF C51

With pre-wired coil connection LU9M RC
With multifunction control unit LUCM

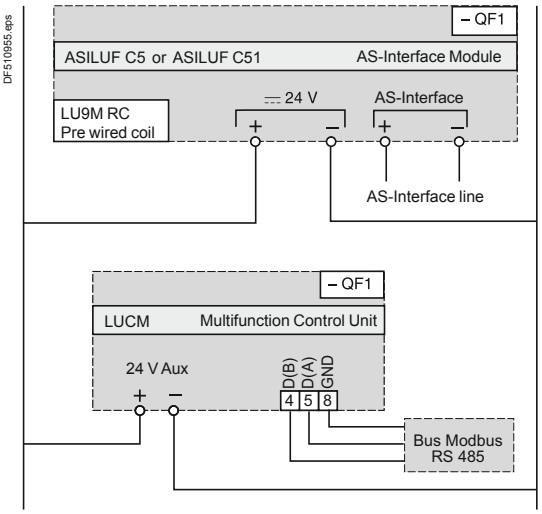

3-wire control, pulsed start with maintaining contact and limit switches

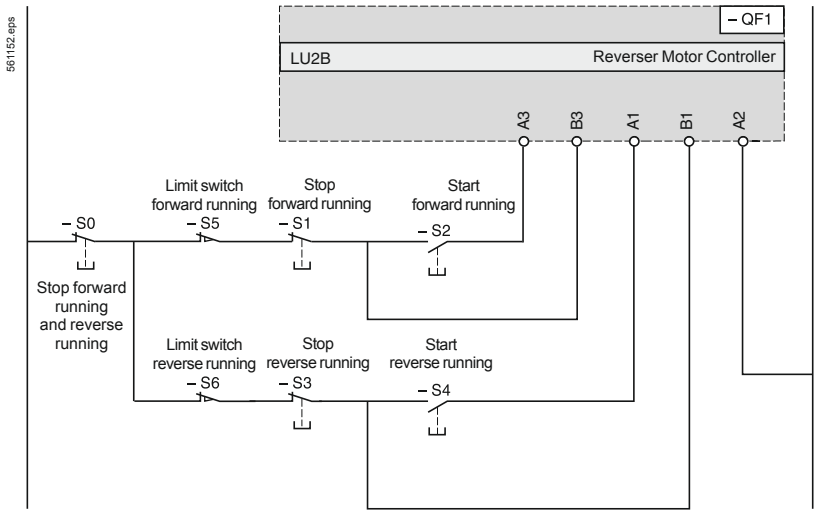

Control by communication modules ASILUF C5 and ASILUF C51

Without pre-wired coil connection
With running direction pilot lights and limit switches

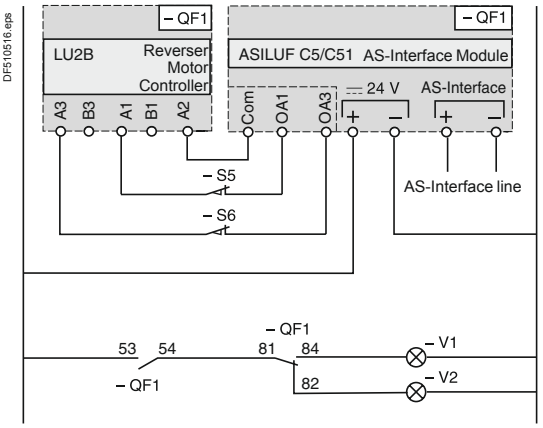

Reversing starter controllers LU2B (continued)

Control via Modbus communication module LUL C031

Without pre-wired coil connection. With local control

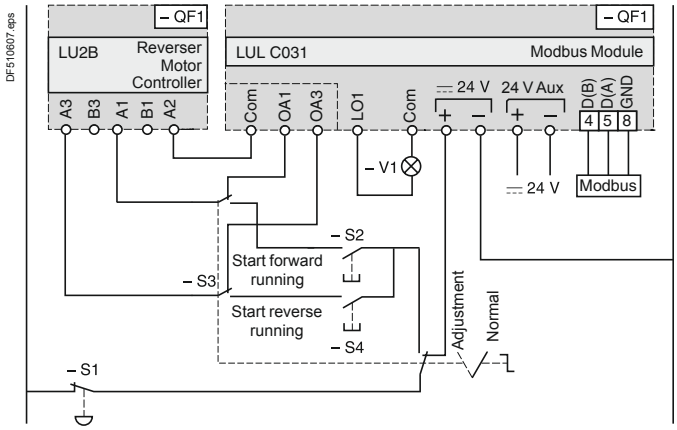

Control via Modbus communication module LUL C033

Without pre-wired coil connection. With local control

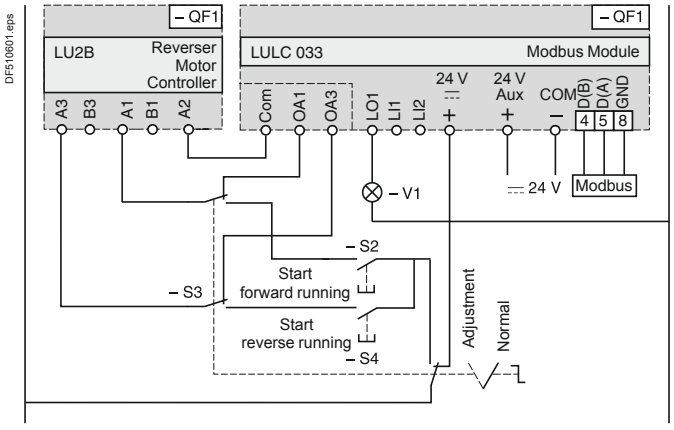

Reversing starter-controllers LUB + LU6M

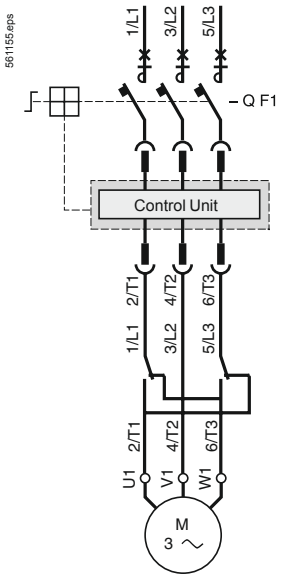

3-wire control, pulsed start with maintaining contact

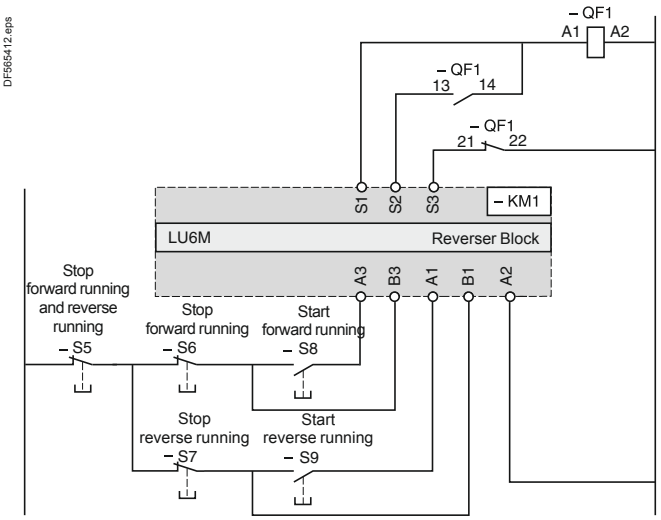

2-wire control via 3-position switch

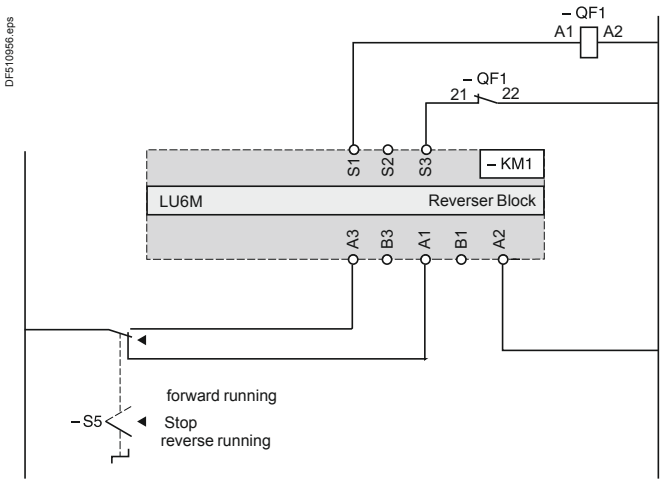

Soft starters for asynchronous motors
Altistart U01 and TeSys U

TeSys U

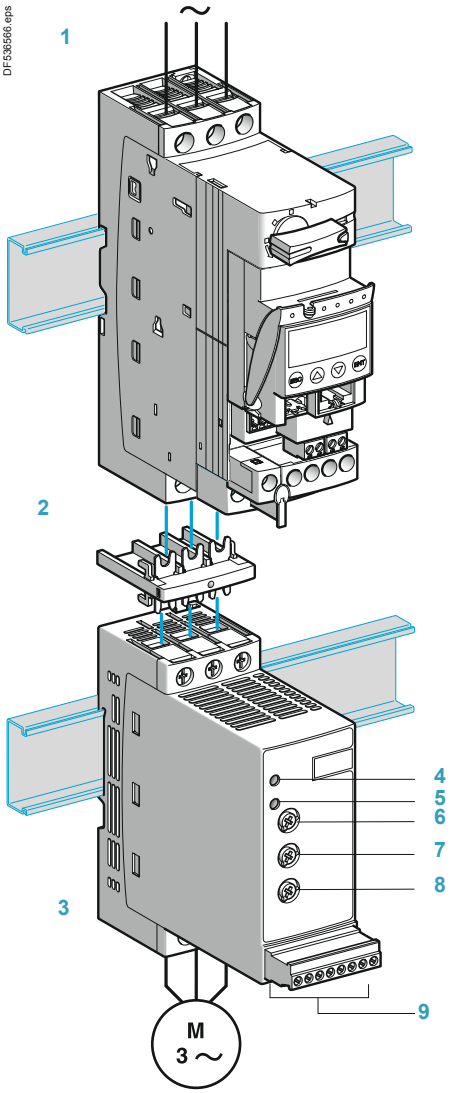

The Altistart U01 is a soft start/soft stop unit for asynchronous motors. It is designed primarily for combinations with **TeSys U** controller-starters.

When combined with a **TeSys U** 1 controller by means of a connector 2, the Altistart U01 3 is a power option which provides the “Soft start/soft stop” function. The result is a unique, innovative motor starter.

Using the Altistart U01 starter enhances the starting performance of asynchronous motors by allowing them to start gradually, smoothly and in a controlled manner. It prevents mechanical shocks, which lead to wear and tear, and limits the amount of maintenance work and production downtime.
The Altistart U01 limits the starting torque and current peaks on starting, on machines which do not require a high starting torque.

The Altistart U01 is designed for the following simple applications:
- Conveyors
- Conveyor belts
- Pumps
- Fans
- Compressors
- Automatic doors and gates
- Small cranes
- Belt-driven machines, etc.

The Altistart U01 is compact and easy to install. It complies with standards IEC/EN 60947-4-2, carries UL, CSA, C-Tick, CCC certifications and CE marking.

■ **ATSU 01N2●●LT soft start/soft stop units**
□ Control two phases of the motor power supply to limit the starting current and for deceleration
□ Internal bypass relay
□ Motor power ratings ranging from 0.75 kW to 15 kW
□ Motor supply voltages ranging from 200 V to 480 V, 50/60 Hz.
An external power supply is required for controlling the starter.

Description

■ Altistart U01 soft start/soft stop units are equipped with:
□ A potentiometer for setting the starting time 6
□ A potentiometer for setting the deceleration time 8
□ A potentiometer for adjusting the start voltage threshold according to the motor load 7
□ 1 green LED 4 to indicate that the unit is switched on
□ 1 yellow LED 5 **to indicate that the motor is powered at nominal voltage, if it is connected to the starter**
□ A connector 9:
- 2 logic inputs for Run/Stop commands
- 1 logic input for the BOOST function
- 1 logic output to indicate the end of starting
- 1 relay output to indicate the starter has a power supply fault or the motor has reached a standstill at the end of the deceleration stage

Characteristics: pages A4/68 and A4/69
References: page A4/70
Dimensions: page A4/71
Schemes: pages A4/72 to A4/75

Soft starters for asynchronous motors
Altistart U01 and TeSys U

Please consult the “TeSys U starters - open version” catalogue.

■ 2-wire control
The run and stop commands are controlled by a single logic input. State 1 of logic input LI2 controls starting and state 0 controls stopping.

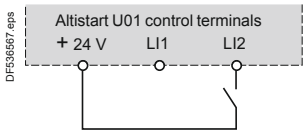

Wiring diagram for 2-wire control

■ 3-wire control
The run and stop commands are controlled by 2 different logic inputs.
Stopping is achieved when logic input LI1 opens (state 0).
The pulse on input LI2 is stored until input LI1 opens.

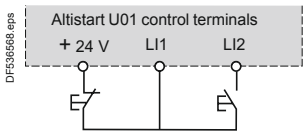

Wiring diagram for 3-wire control

■ Starting time
Controlling the starting time means that the time of the voltage ramp applied to the motor can be adjusted to obtain a gradual starting time, dependent on the motor load.

■ Voltage boost function via logic input
Activating the BOOST logic input enables the function for supplying a starting overtorque capable of overcoming any mechanical friction.
When the input is at state 1, the function is active (input connected to the + 24 V) and the starter applies a fixed voltage to the motor for a limited time before starting.

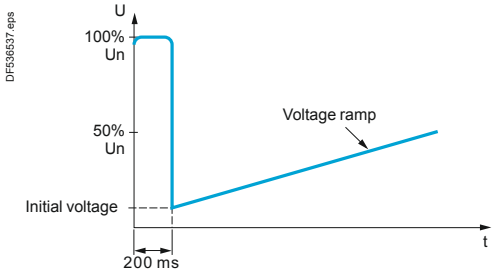

Application of a voltage boost equal to 100% of the nominal motor voltage

■ End of starting
□ application function for logic output LO1
ATSU 01N2●●LT soft start/soft stop units are equipped with an open collector logic output LO, which indicates the end of starting when the motor has reached nominal speed.

Soft starters for asynchronous motors
Altistart U01 and TeSys U

Environmental characteristics

Type of starter			ATSU 01N2●●LT
Conformity to standards			Altistart U01 electronic starters have been developed to conform to the strictest international standards and the recommendations relating to electrical industrial control devices (IEC, EN), in particular standard IEC/EN 60947-4-2.
Electromagnetic compatibility EMC			
	Conducted and radiated emissions		CISPR 11 level B, IEC 60947-4-2, level B
	Harmonics		IEC 1000-3-2, IEC 1000-3-4
	EMC immunity		EN 50082-2, EN 50082-1
	Electrostatic discharge		IEC 61000-4-2 level 3
	Immunity to radiated radio-electrical interference		IEC 61000-4-3 level 3
	Immunity to electrical transients		IEC 61000-4-4 level 4
	Voltage/current impulse		IEC 61000-4-5 level 3
	Conducted and radiated emissions		IEC 61000-4-6 level 3
	Immunity to conducted interference caused by radio-electrical fields		IEC 61000-4-11
	Damped oscillating waves		IEC 61000-4-12 level 3
CE marking			The starters carry CE marking in accordance with the European low voltage directives IEC/EN 60947-4-2.
Product certifications			UL, CSA, C-Tick and CCC
Degree of protection			IP 20
Degree of pollution			2 conforming to IEC/EN 60947-4-2
Vibration resistance			1.5 mm peak to peak from 3 to 13 Hz, 1 gn from 13 to 150 Hz, conforming to IEC/EN 60068-2-6
Shock resistance			15 gn for 11 ms conforming to IEC/EN 60068-2-27
Relative humidity			5…95 % without condensation or dripping water conforming to IEC 60068-2-3
Ambient temperature around the unit	Storage	°C	-25…+70 conforming to IEC/EN 60947-4-2
	Operation	°C	-10…+40 without derating, up to 50°C with current derating of 2 % per °C above 40°C
Maximum operating altitude		m	1000 without derating (above this, derate the current by 2.2 % per additional 100 m)
Operating position Maximum permanent angle in relation to the normal vertical mounting position			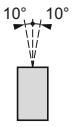

Electrical characteristics

Type of starter			ATSU 01N2●●LT				
Category of use	Conforming to IEC 60947-4-2		Ac-53b				
Rated operating voltage	3-phase ∼ voltage	V	200 - 10 % to 480 + 10 %				
Frequency		Hz	50 - 5 % to 60 + 5 %				
Output voltage			Maximum 3-phase voltage equal to line supply voltage				
Control supply voltage			24 V ⎓, 100 mA ±10 %				
Rated operating current		A	6...32				
Adjustable starting time		s	1...10				
Adjustable deceleration time		s	1...10				
Starting torque		%	30.... 80 % of DOL motor starting torque				
Type of starter	**ATSU**		**01N206LT**	**01N209LT**	**01N212LT**	**01N222LT**	**01N232LT**
Control power supply consumption			24 V ⎓, 65 mA			24 V ⎓, 100 mA	
Power dissipated	At full load at end of starting	W	1.5	1.5	1.5	2.5	2.5
	In transient state at 5 times the rated operating current	W	61.5	91.5	121.5	222.5	322.5

Type of starter			ATSU 01N206LT to ATSU 01N222LT			ATSU 01N232LT		
Use								
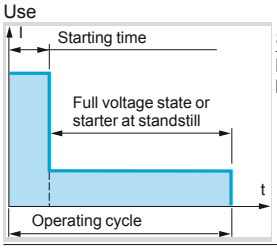	Starting time	s	1	5	10	1	5	10
	Maximum number of cycles per hour		100	20	10	50	10	5

Electrical characteristics (continued)

Logic input power supply (electrically isolated between power and control) + 24 V, COM			24 V ±10 % Isolated Max. current 100 mA
Logic inputs LI1, LI2, BOOST Stop, run and boost on start-up functions			Logic inputs with impedance 27 kΩ; 24 V power supply (U max 40 V) Max. current 8 mA State 0 if U < 5 V and I < 0.2 mA State 1 if U > 13 V and I > 0.5 mA
Logic output LO1 End of starting signal			Open collector logic output: External 24 V power supply (minimum 6 V, maximum 30 V) Max. current 200 mA
Relay output R1A R1C			Normally open (N/O) contact Minimum switching capacity: 10 mA for 6 V ⎓ Maximum switching capacity on inductive load (cos φ = 0.5 and L/R = 20 ms): 2 A for 250 V ∿ or 30 V ⎓ (AC-15) Maximum operating voltage 440 V
LED signalling	Green LED		Starter powered up
	Yellow LED		Nominal voltage reached

Connections (maximum connection capacity and tightening torque)

Power circuit			**Connection to Ø4 mm screw clamps**	
Flexible wire without cable end	1 conductor	**mm²**	1.5…10	8 AWG
	2 conductors	**mm²**	1.5…6	10 AWG
Flexible wire with cable end	1 conductor	**mm²**	1…6	10 AWG
	2 conductors	**mm²**	1…6	10 AWG
Rigid wire	1 conductor	**mm²**	1…10	8 AWG
	2 conductors	**mm²**	1…6	10 AWG
Tightening torque		**N.m**	1.9…2.5	
Control circuit			**Screw connector**	
Flexible wire without cable end	1 conductor	**mm²**	0.5…2.5	14 AWG
	2 conductors	**mm²**	0.5…1.5	16 AWG
Flexible wire with cable end	1 conductor	**mm²**	0.5…1.5	16 AWG
	2 conductors	**mm²**	0.5…1.5	16 AWG
Rigid wire	1 conductor	**mm²**	0.5…2.5	14 AWG
	2 conductors	**mm²**	0.5…1	17 AWG
Tightening torque		**N.m**	0.5	

Torque characteristics (typical curves)

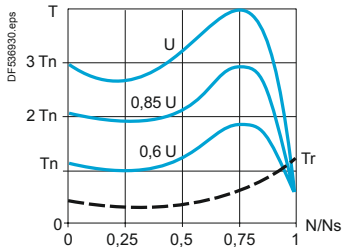

The diagram opposite shows the torque/speed characteristic of a cage motor in relation to the supply voltage.
The torque varies in line with the square of the voltage at a fixed frequency. The gradual increase in the voltage prevents the instantaneous current peak on power-up.

Soft starters for asynchronous motors
Altistart U01 and TeSys U

DF531714.tif



ATSU 01N222LT

Soft start/soft stop units for 0.75 to 15 kW motors
(can be combined with the TeSys U starter)

Motor power [1]				Starter	
230 V	230 V	400 V	460 V	Nominal current	Reference
kW	*HP*	kW	*HP*	A	
3-phase supply voltage: 200…480 V 50/60 Hz					
0.75 1.1	*1* *1.5*	1.5 2.2 3	*2* *3*	6	**ATSU01N206LT**
1.5 –	*2* –	– 4	*5* –	9	**ATSU01N209LT**
2.2 3	*3* –	5.5 –	*7.5* –	12	**ATSU01N212LT**
4 5.5	*5* *7.5*	7.5 11	*10* *15*	22	**ATSU01N222LT**
7.5	*10*	15	*20*	32	**ATSU01N232LT**

DF536570.eps

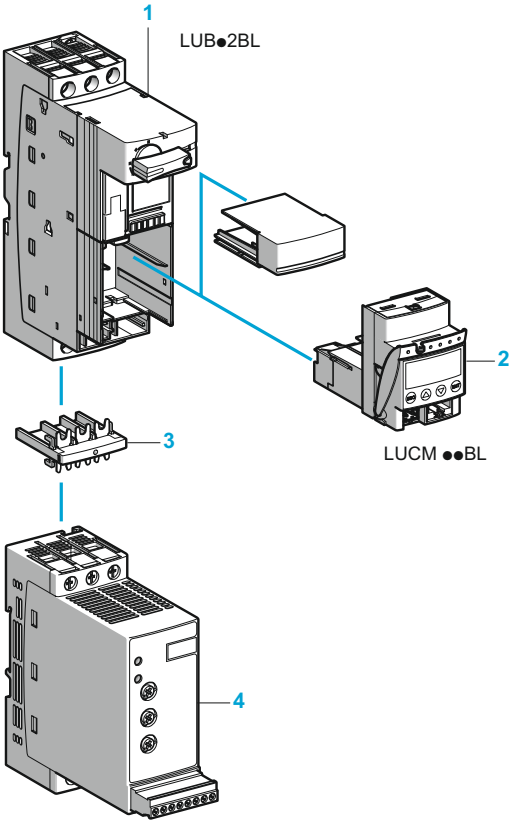

ATSU 01N2●●LT

Accessorie

Description	Used for starter	Reference
Power connector between ATSU 01N2●●LT and TeSys U	ATSU 01N2●●LT	**VW3G4104**

TeSys U starter and soft start unit combinations

Numerous possibilities for combinations and options are offered.
Please consult the “TeSys U Starters-open version” specialist catalogue.

Motor power Voltage			Soft starter	TeSys U	
				Power base	Control unit [2]
230 V kW/*HP*	400 V kW	460 V *HP*			
0.75/*1*	1.5	*2*	ATSU 01N206LT	LUB 12	LUC● 05BL
1.1/*1.5*	2.2/3	*3*	ATSU 01N206LT	LUB 12	LUC● 12BL
1.5/*2*	–	–	ATSU 01N209LT	LUB 12	LUC● 12BL
–	4	*5*	ATSU 01N209LT	LUB 12	LUC● 12BL
2.2/*3*	–	–	ATSU 01N212LT	LUB 12	LUC● 12BL
3/–	5.5	*7.5*	ATSU 01N212LT	LUB 32	LUC● 18BL
4/*5*	7.5	*10*	ATSU 01N222LT	LUB 32	LUC● 18BL
5.5/*7.5*	11	*15*	ATSU 01N222LT	LUB 32	LUC● 32BL
7.5/*10*	15	*20*	ATSU 01N232LT	LUB 32	LUC● 32BL

Example of a starter-motor combination with:
1 non-reversing power base for DOL starting (LUB●2BL)
2 control unit (LUCM ●●BL)
3 power connector (VW3 G4104)
4 Altistart U01soft start/soft stop unit (ATSU 01N2●●LT)

(1) Standard motor power ratings, HP power ratings indicated according to standard UL 508.
(2) Depending on the configuration of the chosen TeSys U starter, replace the ● with A for standard, B for expandable, and M for multifunction.

Presentation: pages A4/66 and A4/67
Characteristics: pages A4/68 and A4/69
Dimensions: page A4/71
Schemes: pages A4/72 to A4/75

TeSys U combination (non-reversing power base) and ATSU 01N206LT to ATSU 01N212LT

Mounting on ⊔ (35 mm) rail with VW3 G4104 connector

DF536571.eps

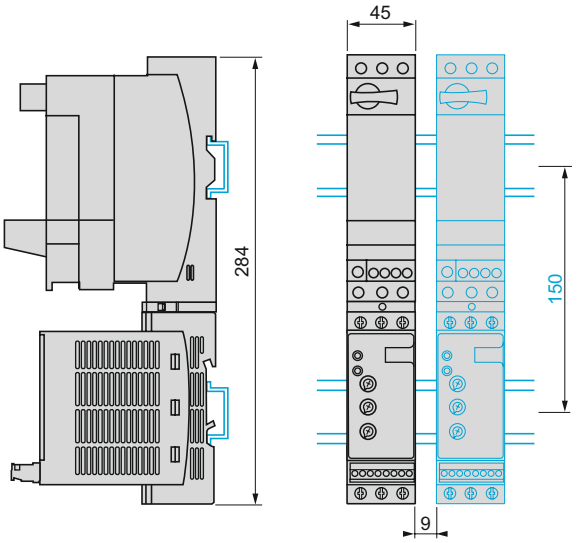

TeSys U combination (non-reversing or reversing power base) and ATSU 01N206LT to ATSU 01N212LT

Side by side mounting

DF536572.eps

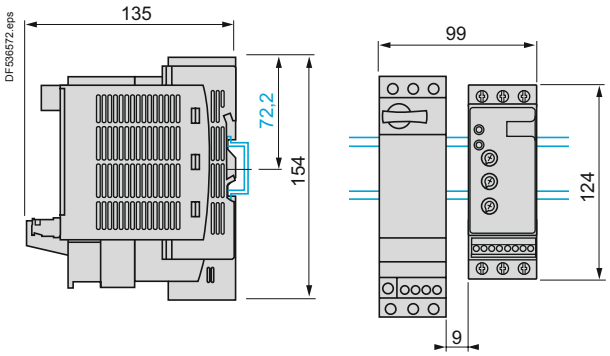

TeSys U combination (non-reversing power base) and ATSU 01N222LT to ATSU 01N232LT

Mounting on ⊔ (35 mm) rail with VW3 G4104 connector

DF536573.eps

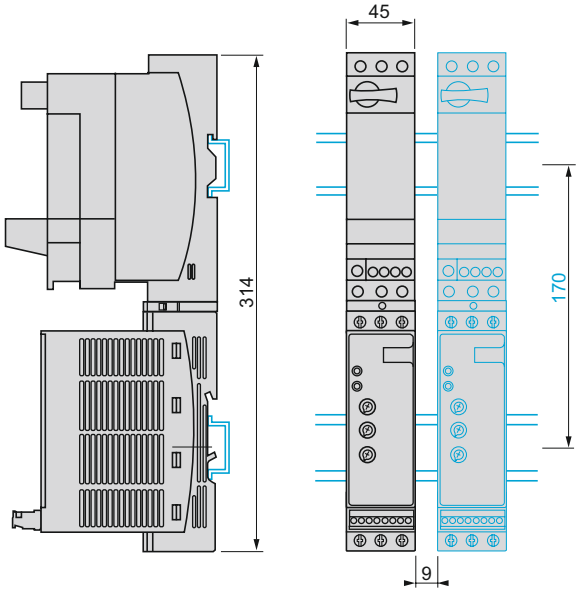

TeSys U combination (non-reversing or reversing power base) and ATSU 01N222LT to ATSU 01N232LT

Side by side mounting

DF536574.eps

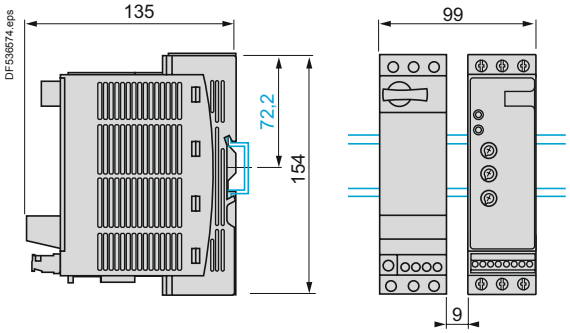

VW3 G4104 connector

DF536575.eps

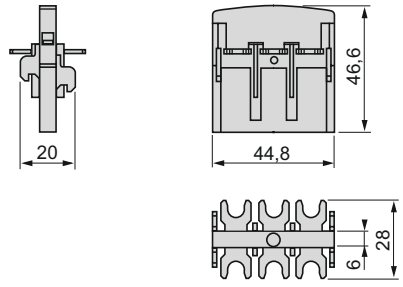

Soft starters for asynchronous motors

Altistart U01 and TeSys U

For 0.75 to 15 kW motors

ATSU 01N2●●LT soft start/soft stop units

Power wiring

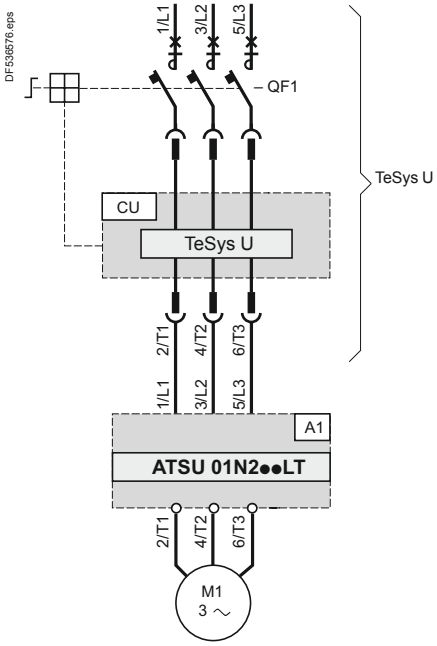

Power wiring with reversing unit

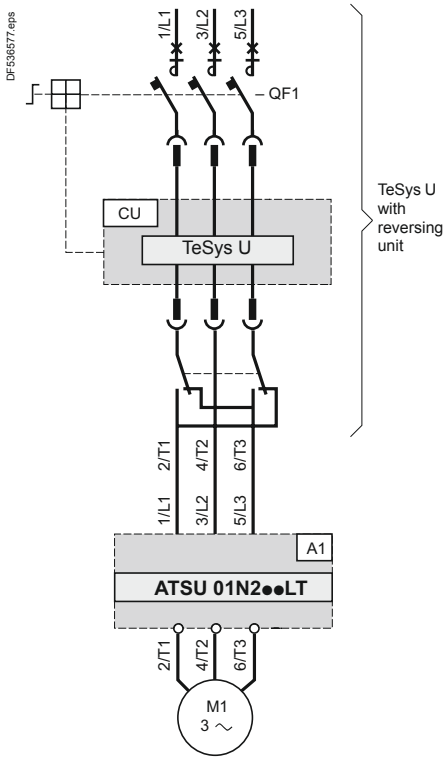

Compatible components

Code	Description
A1	Soft start/soft stop unit
QF1	TeSys U controller-starter
CU	TeSys U control unit

Soft starters for asynchronous motors

Altistart U01 and TeSys U

For 0.75 to 15 kW motors

ATSU 01N2●●LT soft start/soft stop units *(continued)*

Automatic 2-wire control

Without deceleration

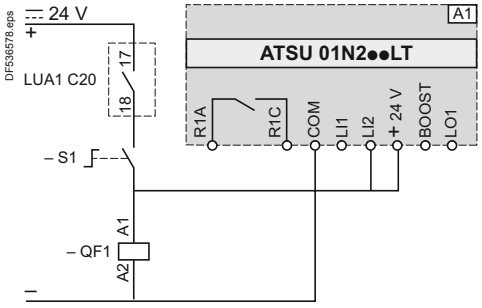

With and without deceleration

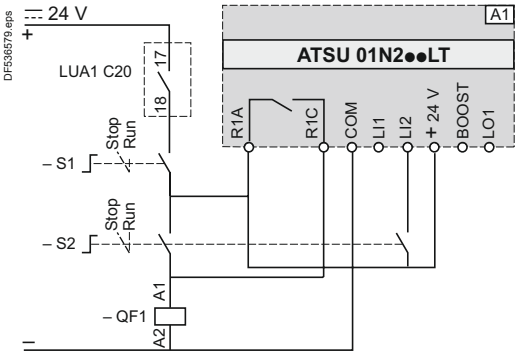

Functional diagrams

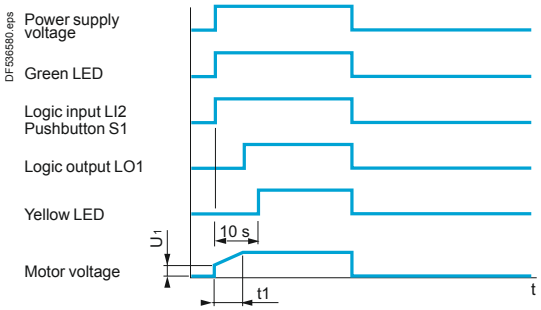

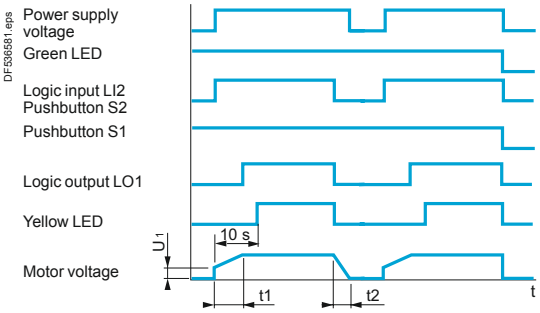

Automatic 3-wire control

Without deceleration

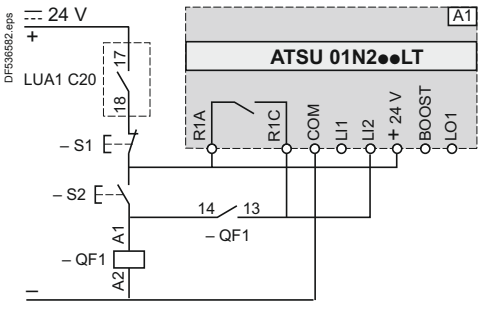

With deceleration

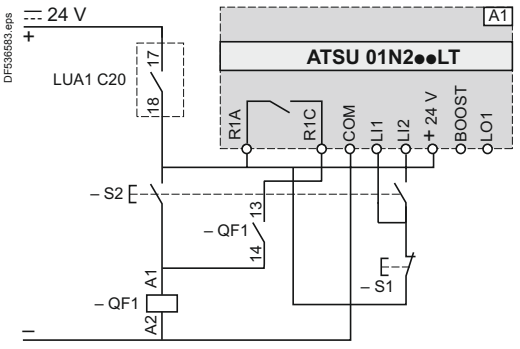

Functional diagrams

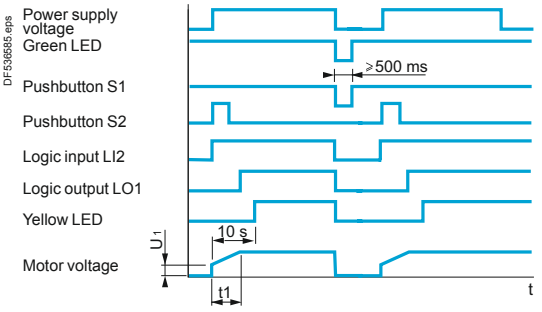

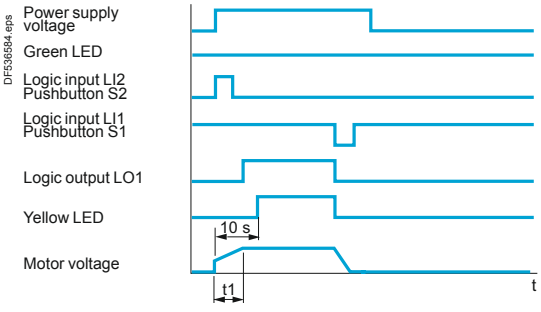

A1: Soft start/soft stop unit
S1, S2: XB4 B or XB5 B pushbuttons
QF1: TeSys U controller-starter
t1: Acceleration time can be controlled by a potentiometer
t2: Deceleration time can be controlled by a potentiometer
U_1: Starting time can be controlled by a potentiometer

Presentation: pages A4/66 and A4/67
Characteristics: pages A4/68 and A4/69
References: page A4/70
Dimensions: page A4/71

Soft starters for asynchronous motors

Altistart U01 and TeSys U

For 0.75 to 15 kW motors

ATSU 01N2●●LT soft start/soft stop units *(continued)*

Automatic 3-wire control, with reversing unit

Without deceleration

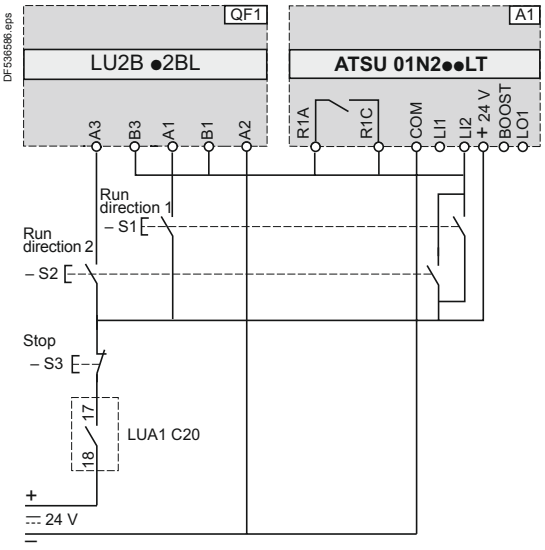

QF1: TeSys U controller-starter with reversing unit
A1: Soft start/soft stop unit
S1, S2, S3: XB4 B or XB5 B pushbuttons
S3: minimum depression time 500 ms

With deceleration

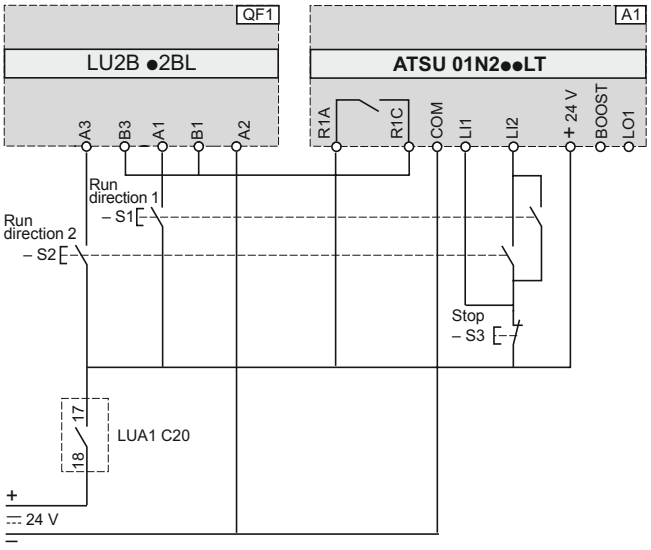

QF1: TeSys U controller-starter with reversing unit
A1: Soft start/soft stop unit
S1, S2, S3: XB4 B or XB5 B pushbuttons

Boost on starting and end of starting signal

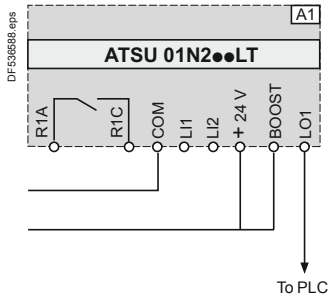

A1: Soft start/soft stop unit

Soft starters for asynchronous motors

Altistart U01 and TeSys U

For 0.75 to 15 kW motors

ATSU 01N2●●LT soft start/soft stop units *(continued)*

Automatic control with Modbus communication module, with and without deceleration

Without reversing unit

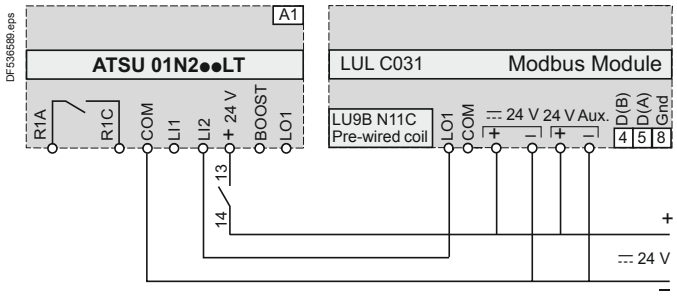

Function	Register	Bit	Value
Powering down TeSys U and ATSU			
–	704	0	0
Automatic control without deceleration			
Run	700	0	1
Stop	704	0	0
Automatic control with deceleration			
Run	700	0	1
Soft stop	700	0	0

A1: Soft start/soft stop unit

With reversing unit

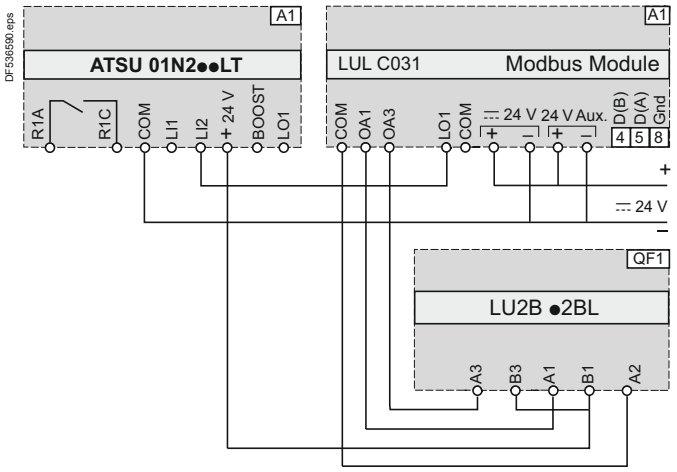

Function	Register	Bit	Value
Powering up TeSys U and ATSU			
Forward	704	0	1
Reverse	704	1	1
Powering down TeSys U and ATSU			
Forward	704	0	0
Reverse	704	1	0
Automatic control without deceleration			
Run	700	0	1
Stop forward	704	0	0
Stop reverse	704	1	0
Automatic control with deceleration (forward or reverse)			
Run	700	0	1
Soft stop	700	0	0

A1: Soft start/soft stop unit
QF1: TeSys U controller-starter with reversing unit

Automatic control with AS-Interface communication module, without deceleration

Without reversing unit

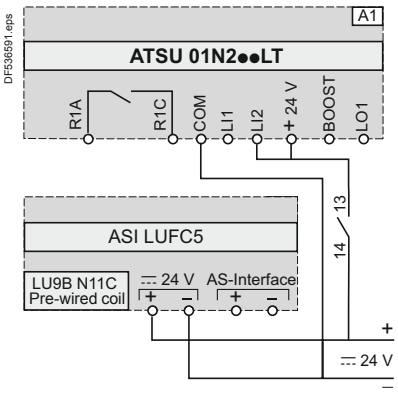

Function	Bit	Value
Power-up and automatic control without deceleration		
Run	D0	1
Stop	D0	0

A1: Soft start/soft stop unit

With reversing unit

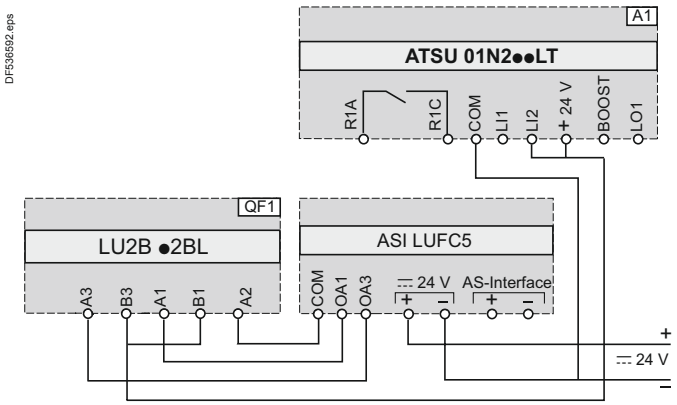

Function	Bit	Value
Power-up and automatic control without deceleration		
Run forward	D0	1
Stop	D0	0
Run reverse	D1	1
Stop	D1	0

A1: Soft start/soft stop unit
QF1: TeSys U controller-starter with reversing unit

Presentation: pages A4/66 and A4/67
Characteristics: pages A4/68 and A4/69
References: page A4/70
Dimensions: page A4/71

TeSys motor starters - open version

Magnetic control unit for the protection of variable speed controllers and soft start units

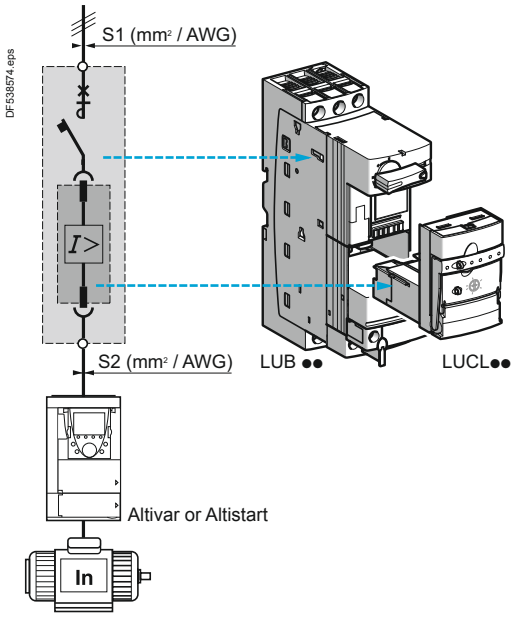

Presentation

When installed upstream of a variable speed controller or soft start unit, control unit LUCL●●, used in conjunction with an LUB 12 or LUB 32 power base, provides:

- isolation,
- short-circuit protection of the motor starter.

(variable speed controller-based or soft start unit-based motor starters).

Note: *control unit LUCL, when used in conjunction with power base LUB 12 or LUB 32, conforms to standard IEC 60947-2.*

Installation regulations

When the length of the cable between the TeSys U starter and the variable speed controller is more than 1.5 m, the c.s.a. of the cable between the variable speed controller and the TeSys U starter (S2) must be equal to the c.s.a. of the cable upstream of TeSys U (S1).

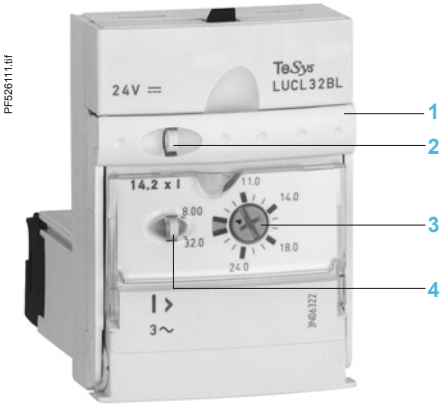

Description

1 Extraction and locking handle
2 Sealing of locking handle
3 Dial for magnetic adjustment of motor In
4 Locking of settings by sealing the transparent cover

References

Description	Line current of the variable speed controller or soft start unit	Reference (1)
	A	
Magnetic control unit	0.15…0.6	**LUCLX6●●**
	0.35…1.4	**LUCL1X●●**
	1.25…5	**LUCL05●●**
	3…12	**LUCL12●●**
	4.5…18	**LUCL18●●**
	8…32	**LUCL32●●**

(1) Standard control circuit voltage:

Volts	24	48…72	110…240
⎓	BL (2) (3)	–	–
∿	B	–	–
⎓ or ∿	–	ES (4)	FU (5)

(2) Voltage code to be used for a starter-controller with communication module.
(3) d.c. voltage with maximum ripple of ±10 %.
(4) ⎓: 48…72 V, ∿: 48 V.
(5) ⎓: 110…220 V, ∿: 110…240 V.

TeSys motor starters - open version

Magnetic control unit for the protection of variable speed controllers and soft start stop units

Control unit and associated power base selection

Functions provided	Maximum motor power ratings 50/60 Hz			Power base reference	Control unit reference	Line current
	< 400/415 V	500 V	690 V			
	KW	KW	KW			A
■ Short-circuit protection ■ Manual reset	0.09	–	–	**LUB12 or LUB32**	**LUCLX6●●**	0.15…0.6
	0.25	–	–	**LUB12 or LUB32**	**LUCL1X●●**	0.35…1.4
	1.5	2.2	3	**LUB12 or LUB32**	**LUCL05●●**	1.25…5
	5.5	5.5	9	**LUB12 or LUB32**	**LUCL12●●**	3…12
	7.5	9	15	**LUB32**	**LUCL18●●**	4.5…18
	15	15	18.5	**LUB32**	**LUCL32●●**	8…32

Operating characteristics

Control units		Standard	Advanced				Multifunction
		LUCA	LUCB	LUCC	LUCD	LUCL	LUCM
Thermal overload protection		■	■	■	■	□	■
Over current protection		14.2 x the setting current					3 to 17 x the setting current
Short-circuit protection		14.2 x the max. current					
Protection against phase loss		■	■	■	■	□	■
Protection against phase imbalance		■	■	■	■	□	■
Earth fault protection (equipment protection only)		■	■	■	■	□	■
Tripping class		10		10	20		5…30
Motor type		3-phase		Single-phase	3-phase	Single-phase and 3-phase	
Thermal overload test function		□	■	■	■	□	■
Overtorque		□	□	□	□	□	■
No-load running		□	□	□	□	□	■
Long starting time		□	□	□	□	□	■
Reset method	Manual	■	■	■	■	■	Parameters can be set
	Automatic or remote	□	With function module, or parameters can be set via the bus with a communication module (see page 24614/2).			□	Parameters can be set Parameters can be set via the bus with a communication module (see page 24614/2).

■ *Integrated function* ■ *Function provided with accessory*

Compatibility

Compatibility of control unit LUCL●● with		References	Functions
The starter-controller	Yes	LUB 12/LUB 32	Starter-controller (magnetic protection)
The starter	No	LUS 12/LUS 32	Starter without either magnetic or thermal overload protection)
The controller	No	LUT M	Controller (without thermal overload protection)
Add-on contact blocks with fault signalling and auxiliary contacts	Yes	LUA 1C11	Add-on contact blocks with fault signalling (1 N/O + 1 N/C)
		LUA 1C20	Add-on contact blocks with fault signalling (2 N/O)
		LUF N20	Auxiliary contacts (2 N/O)
		LUF N11	Auxiliary contacts (1 N/O + 1 N/C)
		LUF N02	Auxiliary contacts (2 N/C)
Communication modules	Yes	ASILUF C5 and ASILUF C51	AS-Interface communication modules
		LUF C00	Parallel wiring module
		LUL C07	Profibus DP communication module (1 output/2 inputs)
		LUL C08	CANopen communication module (1 output/2 inputs)
		LUL C09	DeviceNet communication module (1 output/2 inputs)
		LUL C15	Advantys STB communication module (1 output/2 inputs)
		LUL C031	Modbus communication module (1 output)
		LUL C033	Modbus communication module (1 output/2 inputs)
Function modules	No	LUF W10	Alarm function module
		LUF DH11	Thermal overload signalling module with manual reset
		LUF DA01	Thermal overload signalling module with automatic or remote reset (1 N/C)
		LUF DA10	Thermal overload signalling module with automatic or remote reset (1 N/O)
		LUF V2	Motor load indication module

TeSys motor starters - open version

TeSys U starter-controllers

Characteristics of magnetic control unit LUCL

Protection	Motor type		3-phase	
	Conforming to standard		When used in conjunction with an LUB 12 or LUB 32 power base, magnetic control unit LUCL conforms to standard IEC 60947-2.	
Short-circuit protection	Tripping threshold		14.2 x In (max. setting current)	
	Tripping tolerance		±20 %	
Environment				
Product certifications			CE	
Conforming to standards			When used in conjunction an LUB power base, control unit LUCL conforms to standard 60947-2.	
Rated insulation voltage (Ui)	Conforming to IEC/EN 60947-1, overvoltage category III, degree of pollution: 3	**V**	690	
Rated impulse withstand voltage (Uimp)	Conforming to IEC/EN 60947-2	**kV**	6	
Safety separation of circuits SELV	Conforming to IEC/EN 60947-1 appendix N	**V**	Between the control or auxiliary circuit and the main circuit: 400	
			Between the control and auxiliary circuits: 40	
Degree of protection Conforming to IEC/EN 60947-1 (protection against direct finger contact)	Front panel outside connection zone		IP 40	
	Front panel and wired terminals		IP 20	
	Other faces		IP 20	
Protective treatment	Conforming to IEC/EN 60068		"TH"	
	Conforming to/EN 60068-2-30	**Cycles**	12	
	Conforming to IEC/EN 60068-2-11	**h**	48	
Ambient air temperature around the device	Storage	**°C**	- 40…+ 85	
	Operation	**°C**	Power bases and standard and advanced control units: - 25… + 70. (At temperatures above 60°C and up to 70°C, for Ie = 32 A, leave a minimum gap of 9 mm between products).	
			Power bases and multifunction control units: - 25…+ 60. (At temperatures above 45 °C, leave a minimum gap of 9 mm between products. At temperatures above 55 °C up to 60 °C, leave a gap of 20 mm between products.)	
Maximum operating altitude		**m**	2000	
Operating positions	In relation to normal vertical mounting plane		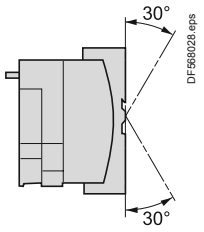 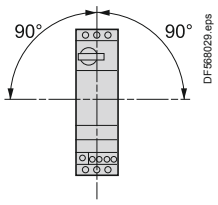	
Flame resistance	Conforming to UL 94		V2	
	Conforming to IEC/EN 60695-2-12	**°C**	960 (parts supporting live components)	
		°C	650	
Environmental restrictions			Cadmium and silicone-free, recyclable	
Shock resistance 1/2 sine wave = 11 ms	Conforming to IEC/EN60068-2-27 (1)		Power poles open: 10 gn	
			Power poles closed: 15 gn	
Vibration resistance 5…300 Hz	Conforming to IEC/EN 60068-2-6 (1)		Power poles open: 2 gn	
			Power poles closed: 4 gn (2)	
Resistance to electrostatic discharge	Conforming to IEC/EN 61000-4-2	**kV**	In open air: 8 - Level 3	
		kV	On contact: 8 - Level 4	
Immunity to radiated high-frequency disturbance	Conforming to IEC/EN 61000-4-3	**V/m**	10 - Level 3	
Immunity to fast transient currents	Conforming to IEC/EN 61000-4-4	**kV**	All circuits except for serial link: 4 - Level 4	
		kV	Serial link: 2 - Level 3	
Immunity to dissipated shock waves	Conforming to IEC/EN 60947-2		**Common mode**	**Serial mode**
	Uc ∿ 24…240 V, Uc ⎓ 48…220 V	**kV**	2	1
	Uc = 24 V ⎓		Not applicable	
Immunity to conducted high-frequency disturbance	Conforming to IEC/EN 61000-4-6	**V**	10	

(1) Without modifying the contact states, in the most unfavourable direction.
(2) 2 gn with Advantys STB or CANopen communication modules.

TeSys motor starters - open version

TeSys U starter-controllers

Power bases and LUCL magnetic control unit

Power base and control unit type				LUB 12 + LUCL	LUB 32 + LUCL
Connection to Ø4 mm screw clamp terminals					
Flexible cable without cable end	1 conductor		mm²	2.5…10	2.5…10
	2 conductors		mm²	1.5…6	1.5…6
Flexible cable with cable end	1 conductor		mm²	1…6	1…6
	2 conductors		mm²	1…6	1…6
Flexible cable without cable end	1 conductor		mm²	1…10	1…10
	2 conductors		mm²	1…6	1…6
Screwdriver				Philips n° 2 or flat screwdriver: Ø6 mm	
Tightening torque			N.m	1.9…2.5	1.9…2.5
Control circuit connection characteristics					
Connection to Ø3 mm screw clamp terminals					
Flexible cable without cable end	1 conductor		mm²	0.75…1.5	0.75…1.5
	2 conductors		mm²	0.75…1.5	0.75…1.5
Flexible cable with cable end	1 conductor		mm²	0.34…1.5	0.34…1.5
	2 conductors		mm²	0.34…1.5	0.34…1.5
Flexible cable without cable end	1 conductor		mm²	0.75…1.5	0.75…1.5
	2 conductors		mm²	0.75…1.5	0.75…1.5
Screwdriver				Philips n° 2 or flat screwdriver: Ø5 mm	
Tightening torque			N.m	0.8…1.2	0.8…1.2
Control circuit characteristics					
Rated control circuit voltage	∿ 50/60 Hz		V	24…240	24…240
	⎓		V	24…220	24…220
Voltage limits	⎓ 24 V (1)		V	20…27	20…27
Operation	∿ 24 V		V	20…26.5	20…26.5
	∿ or ⎓ 48…72 V		V	∿ 38.5…72. ⎓ 38.5…93	∿ 38.5…72. ⎓ 38.5…93
	∿ 110…240 V		V	∿ 88…264	∿ 88…264
	⎓ 110…240 V		V	⎓ 88…242	⎓ 88…242
Drop-out	⎓ 24 V		V	14.5	14.5
	∿ 24 V		V	14.5	14.5
	∿ or ⎓ 48…72 V		V	29	29
	∿ 110…240 V, ⎓ 110…220 V		V	55	55
Typical consumption	⎓ 24 V		mA	130	220
I max while closing	∿ 24 V		mA	140	220
	∿ or ⎓ 48…72 V		mA	280	280
	∿ 110…240 V, ⎓ 110…220 V		mA	280	280
I rms sealed	⎓ 24 V		mA	60	80
	∿ 24 V		mA	70	90
	∿ or ⎓ 48…72 V		mA	35	45
	∿ 110…240 V, ⎓ 110…220 V		mA	35	25
Heat dissipation			W	2	3
Operating time	Closing		ms	24 V: 70; 48 V: 60; ≥ 72 V: 50	24 V: 70; 48 V: 60; ≥ 72 V: 50
	Opening		ms	35	35
Resistance to micro-breaks			ms	3	3
Resistance to voltage dips	IEC/EN 61000-4-11			At least 70 % of Uc for 500 ms	
Mechanical durability	In millions of operating cycles			15	15
Maximum operating rate	In operating cycles per hour			3600	3600
Main pole characteristics					
Number of poles				3	3
Isolation conforming to IEC/EN 60947-1	Possible			Yes	Yes
	Padlocking			1 padlock with Ø6.9 mm shank	1 padlock with Ø6.9 mm shank
Rated thermal current			A	12	32
Rated operational current (Ue ≤ 440 V)	Conforming to IEC/EN 60947-2	Category AC-41		θ ≤ 70 °C: 12 A	θ ≤ 70 °C: 32 A
		Category AC-43		θ ≤ 70 °C: 12 A	θ ≤ 70 °C: 32 A
Rated operational voltage			V	690 (3)	690 (3)
Frequency limits	Of the operating current		Hz	40…60	40…60
Power dissipated in the power circuits	Operational current		A	3 6 9 12 18 25 32	
	Power dissipated in all three poles		W	0.1 0.3 0.6 1.1 2.4 4.6 7.5	
Rated breaking capacity on short-circuit			V	230 440 500 600	
			kA	50 50 10 4	
Total breaking time			ms	2 2 2	
Thermal limit	With Isc max on 440 V		kA²s	90	120

(1) d.c. voltage with maximum ripple of ± 10 %.
(2) No consumption sealed.
(3) For 690 V, use phase barrier LU9SP0.

TeSys motor starters - open version

TeSys U starter-controllers

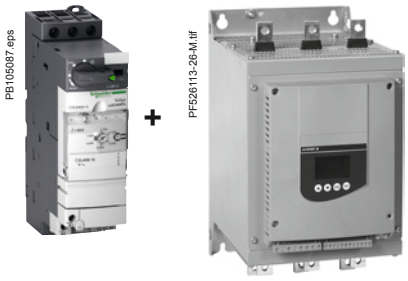

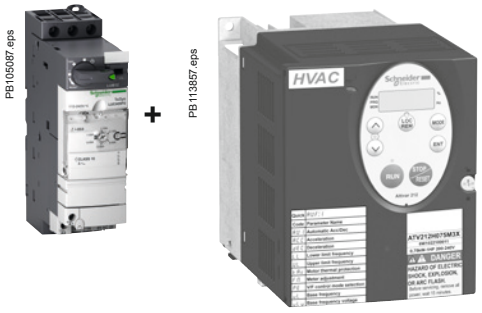

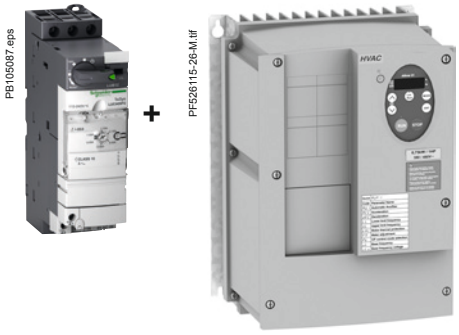

Coordination

The standard defines tests at different levels of current; the purpose of these tests is to place the equipment in extreme conditions.

The standard defines 2 types of coordination, according to the condition of the components after testing: type 1 and type 2.
Type 1 coordination requires that in a short-circuit condition, the contactor or starter must not present any danger to personnel or installations and must not be able to resume operation without repair or the replacement of parts.

The product combinations given below provide type 1 coordination

Soft start-soft stop unit/TeSys U starter controller combination with magnetic protection

TeSys U / Altistart 48: type 1 coordination

Power 400 V (kW)	TeSys U references (protection + power switching)	Soft start unit reference	
		Class 10	Class 20
5.5	LUB32 + LUCL32 or LUCL18	–	**ATS48D17**
7.5	LUB32 + LUCL32	**ATS48D17**	**ATS48D22**
11	LUB32 + LUCL32	**ATS48D22**	**ATS48D32**
15	LUB32 + LUCL32	**ATS48D32**	**ATS48D38**

Variable speed controller/TeSys U starter controller combination with magnetic protection

TeSys U / Altivar 21 UL Type 1/IP 20: type 1 coordination

Power 400 V (kW)	TeSys U references (protection + power switching)	Variable speed controller reference
0.75	LUB12 + LUCL05	**ATV21H075N4**
		ATV21HU15N4
2.2	LUB12 + LUCL12	**ATV21HU22N4**
3	LUB12 + LUCL12	**ATV21HU30N4**
4	LUB12 + LUCL12	**ATV21HU40N4**
5.5	LUB32 + LUCL32 or LUCL18	**ATV21HU55N4**
7.5	LUB32 + LUCL32 or LUCL18	**ATV21HU75N4**
11	LUB32 + LUCL32	**ATV21HD11N4**
15	LUB32 + LUCL32	**ATV21HD15N4**

TeSys U / Altivar 21 IP 54: type 1 coordination

Power 400 V (kW)	TeSys U references (protection + power switching)	Variable speed controller reference
0.75	LUB12 + LUCL05	**ATV21W075N4/N4C**
1.5	LUB12 + LUCL12 or LUCL05	**ATV21WU15N4/N4C**
2.2	LUB12 + LUCL12	**ATV21WU22N4/N4C**
3	LUB12 + LUCL12	**ATV21WU30N4/N4C**
4	LUB12 + LUCL12	**ATV21WU40N4/N4C**
5.5	LUB32 + LUCL32 or LUCL18	**ATV21WU55N4/N4C**
7.5	LUB32 + LUCL32 or LUCL18	**ATV21WU75N4/N4C**
11	LUB32 + LUCL32	**ATV21WD11N4/N4C**
15	LUB32 + LUCL32	**ATV21WD15N4/N4C**

TeSys motor starters - open version

TeSys U starter-controllers

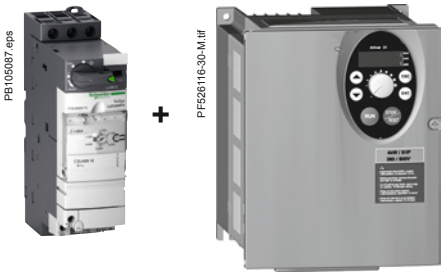





Variable speed controller/TeSys U starter controller combination with magnetic protection (continued)

TeSys U / Altivar 31: type 1 coordination

Power 400 V (kW)	TeSys U references (protection + power switching)	Variable speed controller reference
0.37	LUB12 + LUCL05	**ATV31H037N4**
0.55	LUB12 + LUCL05	**ATV31H055N4**
0.75	LUB12 + LUCL05	**ATV31H075N4**
1.1	LUB12 + LUCL12	**ATV31HU11N4**
1.5	LUB12 + LUCL12	**ATV31HU15N4**
2.2	LUB12 + LUCL12	**ATV31HU22N4**
3	LUB32 + LUCL18	**ATV31HU30N4**
4	LUB32 + LUCL18	**ATV31HU40N4**
5.5	LUB32 + LUCL32	**ATV31HU55N4**
7.5	LUB32 + LUCL32	**ATV31HU75N4**

TeSys U / Altivar 61: type 1 coordination

Power 400V (kW)	TeSys U references (protection + power switching)	Variable speed controller reference
0.75	LUB12 + LUCL05	**ATV61H075N4**
1.5	LUB12 + LUCL12	**ATV61HU15N4**
2.2	LUB12 + LUCL12	**ATV61HU22N4**
3	LUB32 + LUCL18	**ATV61HU30N4**
4	LUB32 + LUCL18	**ATV61HU40N4**
5.5	LUB32 + LUCL32	**ATV61HU55N4**
7.5	LUB32 + LUCL32	**ATV61HU75N4**

TeSys U / Altivar 71: type 1 coordination

Power 400V (kW)	TeSys U references (protection + power switching)	Variable speed controller reference
0.75	LUB12 + LUCL05	**ATV71H075N4**
1.5	LUB12 + LUCL12	**ATV71HU15N4**
2.2	LUB12 + LUCL12	**ATV71HU22N4**
3	LUB32 + LUCL18	**ATV71HU30N4**
4	LUB32 + LUCL18	**ATV71HU40N4**
5.5	LUB32 + LUCL32	**ATV71HU55N4**

All-in-one motor starter: Integral 63

All-in-one motor starter: Integral 63

Type of product	Direct	Reversing	Range		Page
3 pole contactor breakers for motors	☑	☑	Up to 33 kW		A5/2
3 pole contactor breakers for resistive loads – AC1	☑		Up to 63 kW		A5/4
Add-on blocks				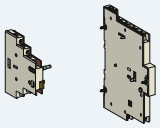	A5/6
Accessories and spare parts				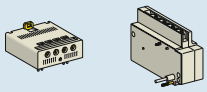	A5/8

Technical Data for Designers A5/15

Motor starters - open version

Contactor breakers and reversing contactor breakers Integral 63 for control and protection of motors (for customer assembly)

DF526454.tif



LD1 LD030●

3-pole contactor breakers without protection module (1)

Without control test function, with padlocking facility

Standard power ratings of 3-phase motors 50/60 Hz in AC-43					Operational current	Breaking capacity (Iq) for Ue ≤ 415 V	Basic reference (3) To be completed by adding the control circuit voltage code (2)	Weight
220 V 240 V	400 V 415 V	440 V	500 V	660 V				
kW	kW	kW	kW	kW	A	kA		kg
Black knob								
15	30 33	33	37	55	63	50	**LD1LD030●**	3.700

With control test function and padlocking facility

Standard power ratings of 3-phase motors 50/60 Hz in AC-43					Operational current	Breaking capacity (Iq) for Ue ≤ 415 V	Basic reference (3) To be completed by adding the control circuit voltage code (2)	Weight
220 V 240 V	400 V 415 V	440 V	500 V	660 V				
kW	kW	kW	kW	kW	A	kA		kg
Black knob (CNOMO, VDE 0113)								
15	30 33	33	37	55	63	50	**LD4LD130●**	3.800
Red knob on yellow background (CNOMO) Emergency Stop								
15	30 33	33	37	55	63	50	**LD4LD030●**	3.800

DF526453.tif



LD5 LC030●

3-pole reversing contactor breakers without protection module (1)

With control test function and padlocking facility

Standard power ratings of 3-phase motors 50/60 Hz in AC-43					Operational current	Breaking capacity (Iq) for Ue ≤ 415 V	Basic reference (3) To be completed by adding the control circuit voltage code (2)	Weight
220 V 240 V	400 V 415 V	440 V	500 V	660 V				
kW	kW	kW	kW	kW	A	kA		kg
Black knob (CNOMO, VDE 0113)								
15	30 33	33	37	55	63	50	**LD5LD130●**	7.600
Red knob on yellow background (CNOMO) Emergency Stop								
15	30 33	33	37	55	63	50	**LD5LD030●**	7.600

(1) For the unit to function, it must be fitted with a protection module, to be ordered separately, see page opposite.
(2) Standard control circuit voltages (for other voltages, please consult your Regional Sales Office):

Volts	24	36	42	48	110	120	220	230	240	380 400	415	440	480	500	600	660
50 Hz	B	–	D	E	F	–	M	M	U	Q	N	N	–	S	–	Y
60 Hz	BC	CC	–	CE	K	FC	LC	MC	MC	–	–	UX	Q	–	S	–
⎓ (4)	BD	–	–	ED	FD	–	–	–	–	–	–	–	–	–	–	–

*(3) Variant: UL 508 "type E" approved version (SPCD) at 347/600 V; to order, add suffix **H5** to the reference. Example: **LD1 LD030MH5**.*
(4) For use on d.c., the unit is supplied with 1 or 2 converters, including coil suppression devices (2 converters for reversing contactor breakers).

Motor starters - open version

Contactor breakers and reversing contactor breakers Integral 63 for control and protection of motors (for customer assembly)

812489.tif

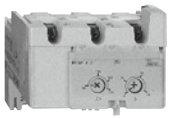

LB1 LD03M●●

Thermal-magnetic protection modules (compensated and differential for normal starting motors) (1)

Fixed magnetic protection, set at 15 Irth max, for mounting on Integral 63

Standard power ratings of 3-phase motors 50/60 Hz in category AC-43					Thermal setting range (Irth min to Irth max)	Magnetic protection	Reference	Weight
220 V 240 V	400 V 415 V	440 V	480 V 525 V	600 V 690 V				
kW	kW	kW	kW	kW	A	A		kg
3	5.5	5.5	7.5	10	10…13	–	**LB1LD03P16**	0.780
4	9	9	11	15	13…18	–	**LB1LD03P21**	0.780
5.5	11	11	15	18.5	18…25	–	**LB1LD03P22**	0.780
7.5	15	15	18.5	22	23…32	–	**LB1LD03P53**	0.780
9	22	22	25	33	28…40	–	**LB1LD03P55**	0.780
11	25	25	33	45	35…50	–	**LB1LD03P57**	0.780
15	33	33	40	55	45…63	–	**LB1LD03P61**	0.780

Adjustable magnetic protection from 6 to 12 Irth max, for mounting on Integral 63

Standard power ratings of 3-phase motors 50/60 Hz in category AC-43					Thermal setting range (Irth min to Irth max)	Magnetic protection	Reference	Weight
220 V 240 V	400 V 415 V	440 V	480 V 525 V	600 V 690 V				
kW	kW	kW	kW	kW	A	A		kg
3	5.5	5.5	7.5	10	10…13	78…156	**LB1LD03M16**	0.780
4	9	9	11	15	13…18	108…216	**LB1LD03M21**	0.780
5.5	11	11	15	18.5	18…25	150…300	**LB1LD03M22**	0.780
7.5	22	22	25	33	23…32	190…380	**LB1LD03M53**	0.780
9	22	22	25	33	28…40	240…480	**LB1LD03M55**	0.780
11	25	25	33	45	35…50	300…600	**LB1LD03M57**	0.780
15	33	33	40	55	45…63	380…760	**LB1LD03M61**	0.780

812489.tif

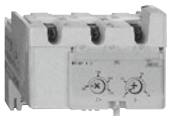

LB6 LD03M●●

Magnetic only protection modules (for frequent starting motors)

Standard power ratings of 3-phase motors 50/60 Hz in category AC-43					Magnetic protection	Reference	Weight
220 V 240 V	400 V 415 V	440 V	480 V 525 V	600 V 690 V			
kW	kW	kW	kW	kW	A		kg
3	5.5	5.5	7.5	10	78…156	**LB6LD03M16**	0.780
4	9	9	11	15	108…216	**LB6LD03M21**	0.780
5.5	11	11	15	18.5	150…300	**LB6LD03M22**	0.780
7.5	22	22	25	33	190…380	**LB6LD03M53**	0.780
9	22	22	25	33	240…480	**LB6LD03M55**	0.780
11	25	25	33	45	300…600	**LB6LD03M57**	0.780
15	33	33	40	55	380…760	**LB6LD03M61**	0.780

(1) Protection modules UL and CSA approved.

Motor starters - open version

Contactor breakers Integral 63

for control and protection of resistive circuits
in category AC-1

Selecting the type of contactor breaker and protection module

Neutral point connection		Type of circuit	Equipment scheme	Combination contactor breaker + protection module
Neutral connection	TNC (neutral and PE combined)	3-pole + PEN	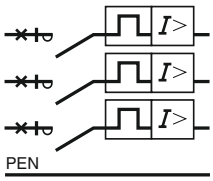	LD1 LD030● + LB1 LD03L●● LD4 LD130● + LB1 LD03L●● LD4 LD030● + LB1 LD03L●●

Note: *the PEN conductor must not be isolated,*

Neutral point connection		Type of circuit	Equipment scheme	Combination contactor breaker + protection module
Neutral connection	TNS (neutral and PE separated)	3-pole	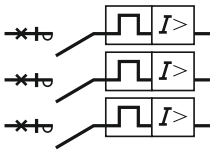	LD1 LC030● + LB1 LC03L●● LD4 LC130● + LB1 LC03L●● LD4 LC030● + LB1 LC03L●●

Note: *all live conductors must be isolated. Neutral protection optional.*

Motor starters - open version

Contactor breakers Integral 63

for control and protection of resistive circuits in category AC-1

PF511155.tif



LD1 LD030●

3-pole contactor breakers without protection module (1)

Without control test function, with padlocking facility

Rated thermal current I th θ ≤ 40 °C	Maximum operational current AC-1 θ ≤ 40 °C	Maximum operational voltage	Breaking capacity (Iq) for Ue ≤ 415 V	Number of poles	Basic reference. To be completed by adding the control voltage code (2)	Weight
A	A	V	kA			kg
Black knob						
63	63	690	50	3	**LD1LC030●**	3.700

With control test function and padlocking facility

Rated thermal current I th θ ≤ 40 °C	Maximum operational current AC-1 θ ≤ 40 °C	Maximum operational voltage	Breaking capacity (Iq) for Ue ≤ 415 V	Number of poles	Basic reference. To be completed by adding the control voltage code (2)	Weight
A	A	V	kA			kg
Black knob (CNOMO. VDE 0113)						
63	63	690	50	3	**LD4LD130●**	3.800
Red knob on yellow background (CNOMO. VDE 0113) Emergency Stop						
63	63	690	50	3	**LD4LD030●**	3.800

DF534495.tif



LB1 LD03L●●

Protection modules (for customer assembly)

Thermal-magnetic (compensated)

Thermal setting range (Irth min./Irth max.)	Magnetic setting range (3…6 Irth max)	Number of poles	Number of protected poles	Reference	Weight
A	A				kg
10…13	39…78	3	3	**LB1LD03L16**	0.780
13…18	54…108	3	3	**LB1LD03L21**	0.780
18…25	75…150	3	3	**LB1LD03L22**	0.780
23…32	95…190	3	3	**LB1LD03L53**	0.780
28…40	120…240	3	3	**LB1LD03L55**	0.780
35…50	150…300	3	3	**LB1LD03L57**	0.780
45…63	190…380	3	3	**LB1LD03L61**	0.780

(1) For the unit to function, it must be fitted with a protection module, to be ordered separately.

(2) Standard control circuit voltages (for other voltages, please consult your Regional Sales Office):

Volts	24	36	42	48	110	120	220	230	240	380 400	415	440	480	500	600	660
50 Hz	B	–	D	E	F	–	M	M	U	Q	N	N	–	S	–	Y
60 Hz	BC	CC	–	CE	K	FC	LC	MC	MC	–	–	UX	Q	–	S	–
⎓ (3)	BD	–	–	ED	FD	–	–	–	–	–	–	–	–	–	–	–

(3) For use on d.c., the unit is supplied with a converter, including coil suppression device.

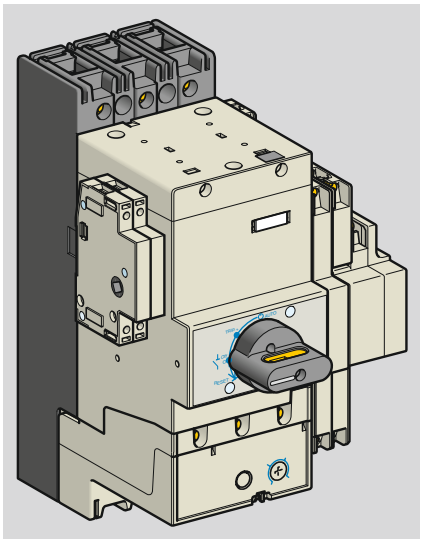

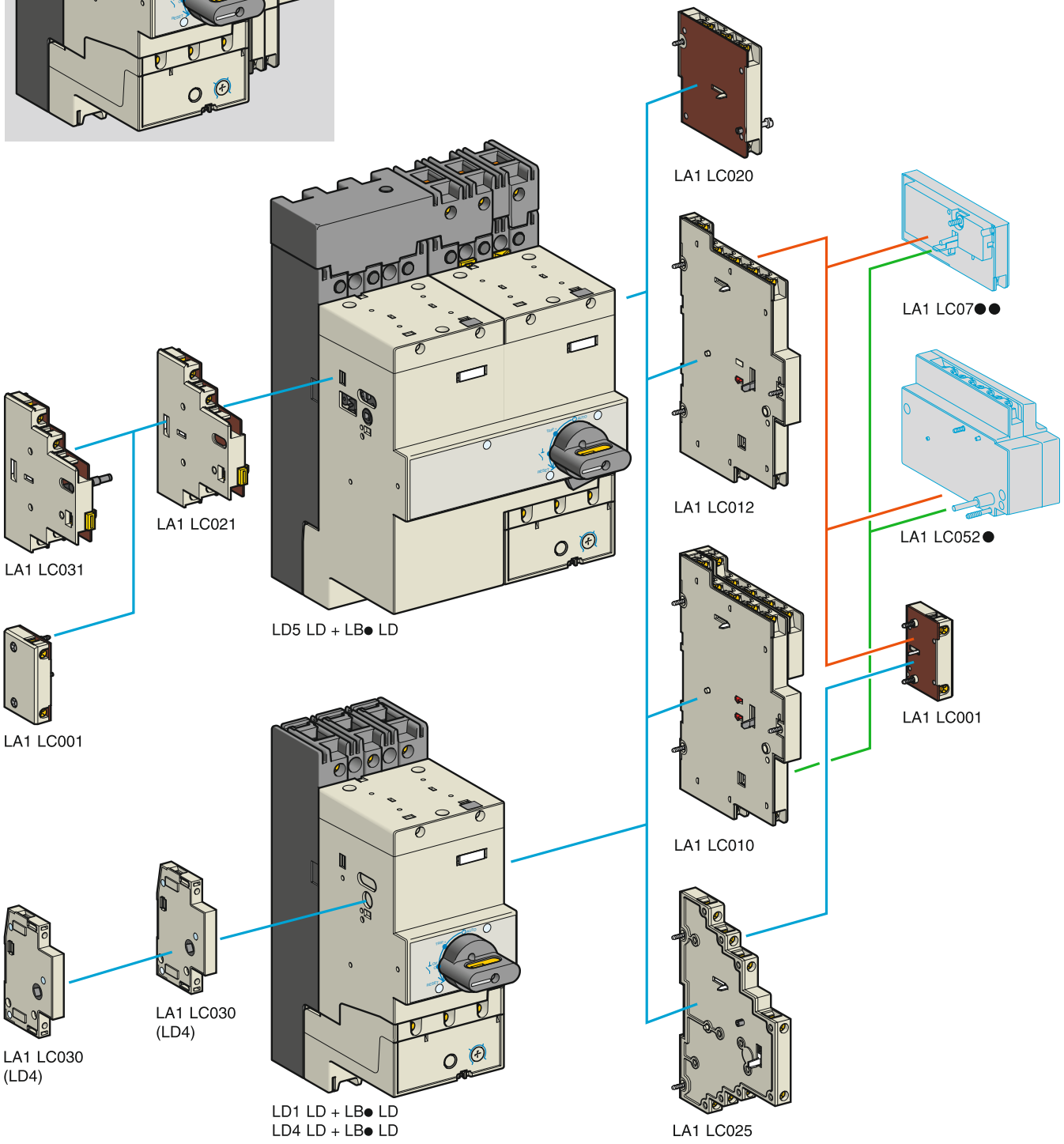
LA1 LC020
LA1 LC07●●
LA1 LC012
LA1 LC052●
LA1 LC031
LA1 LC021
LD5 LD + LB● LD
LA1 LC001
LA1 LC001
LA1 LC010
LA1 LC030
(LD4)
LA1 LC030
(LD4)
LD1 LD + LB● LD
LD4 LD + LB● LD
LA1 LC025

Motor starters - open version

Contactor breakers and reversing contactor breakers Integral 63

Add-on blocks

Instantaneous auxiliary contact blocks (IP 20) (1)

For use on	Type and number of blocks per unit	Composition N/O	N/C	C/O	Reference
LD1D, LD4 or **L5** Mounted on RH side	1 block of 6 contacts comprising:				**LA1LC010**
	■ 3 signalling contacts "contactor state"	**2**	**1**	**–**	
		–	**–**	**1**	
	■ 1 signalling contact "control knob in any position other than Auto"	**–**	**–**	**1**	
	■ 1 signalling contact tripped on short-circuit				
	■ 1 signalling contact "tripped"	**–**	**–**	**1**	
	1 block of 5 contacts comprising:				**LA1LC012**
	■ 3 signalling contacts "contactor state"	**2**	**1**	**–**	
		1	**–**	**–**	
	■ 1 signalling contact tripped on short-circuit	**1**	**–**	**–**	
	■ 1 signalling contact "tripped"				
	1 block of 4 contacts comprising:				**LA1LC025**
	■ 3 signalling contacts "contactor state"	**2**	**1**	**–**	
		1	**1**	**–**	
	■ 1 signalling contact "tripped", selectable by the user				
	1 block of 3 signalling contacts "contactor state"	**2**	**1**	**–**	**LA1LC020**
LD4 Mounted on LH side	1 control circuit isolating block (1 or 2 blocks per unit)	**1**	**–**	**–**	**LA1LC030**
LD5 Mounted on LH side	1 block of 3 signalling contacts "contactor state"	**2**	**1**	**–**	**LA1LB021**
	1 control circuit isolating block comprising 2 contacts	**2**	**–**	**–**	**LA1LC031**

Signalling contact block (IP 10) (1)

For use on	Type and number of blocks per unit	Composition N/O	N/C	C/O	Reference
LD1, LD4 or LD5	1 block comprising 1 signalling contact "contactor state" Mounted on LH or RH side	**–**	**1**	**–**	**LA1LC001**

(1) UL and CSA approved.

DF511509.eps

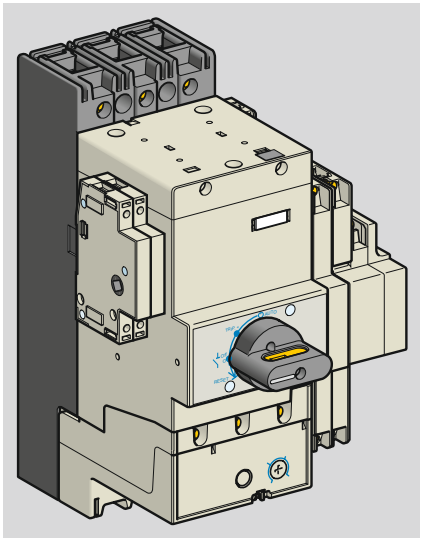

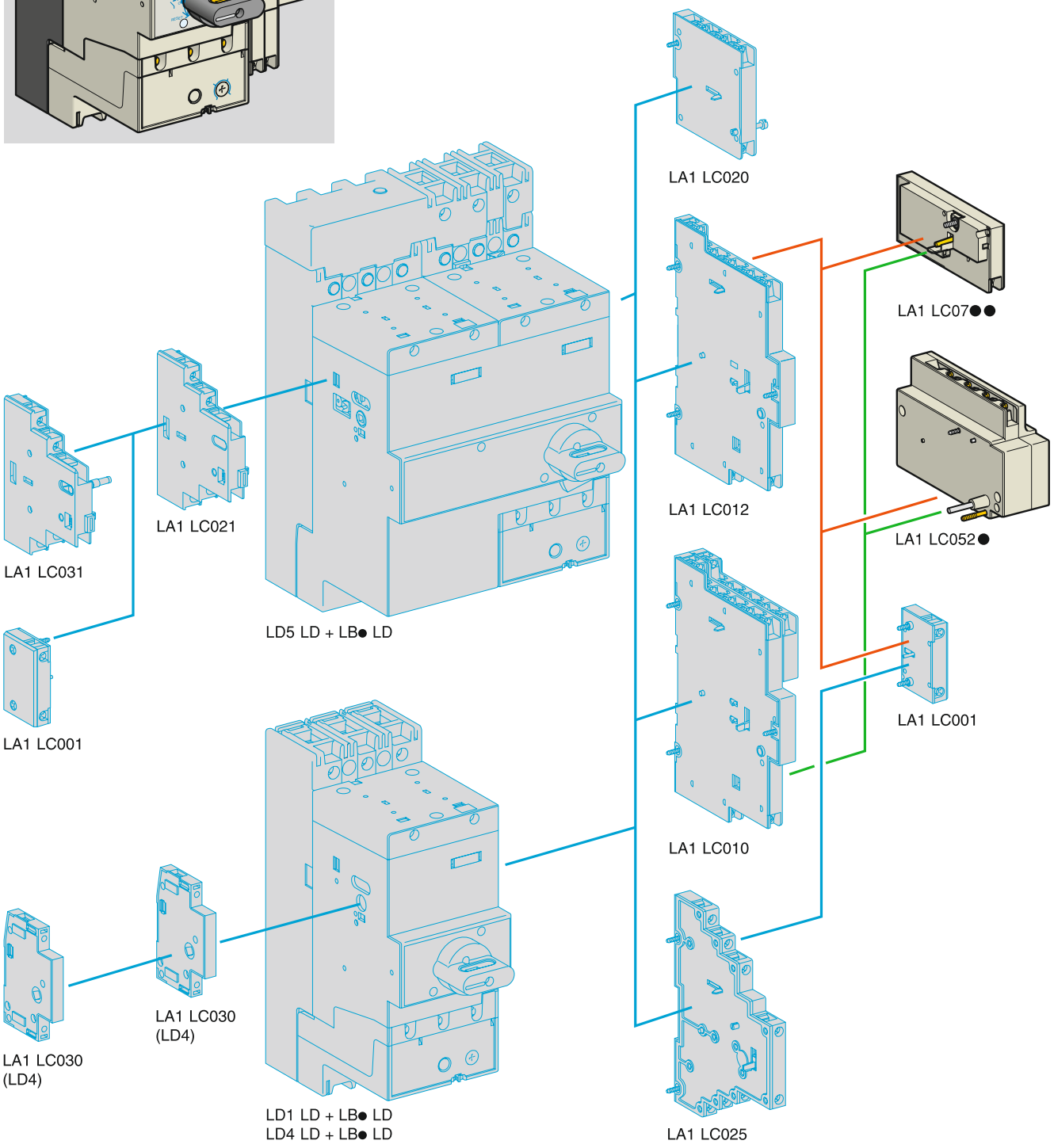

Motor starters - open version

Contactor breakers and reversing contactor breakers Integral 63

Accessories

Electrical tripping and reset devices

For use on	Type and number of devices per unit		Basic reference. To be completed by adding the control voltage code (1)
LD1, LD4 or **LD5** fitted with an **LA1 LC010** or **LA1 LC012** block	1 undervoltage trip	Time delay 0.2 s	**LA1LC070●**
		Instantaneous	**LA1LC072●**
	or 1 shunt trip	Instantaneous	**LA1LC071●**
LD1, LD4 or **LD5** fitted with an **LA1 LC010** or **LA1 LC012** add-on block	1 remote electrical reset device	24 V 50/60 Hz	**LA1LC052B**
		42 V 50 Hz 48 V 50/60 Hz	**LA1LC052E**
		100/127 V 50/60 Hz	**LA1LC052F**
		200/240 V 50/60 Hz	**LA1LC052M**

(1) Standard control circuit voltages (for other voltages, please consult your Regional Sales Office):

Volts	24	48	110	120	220/230	240	380/400	415	440
50 Hz	B	E	F	–	M	U	Q	N	N
60 Hz	B	E	F	F	M	M	Q	–	N

DF511510.eps

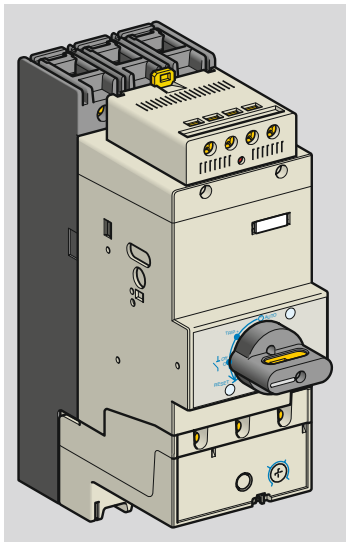

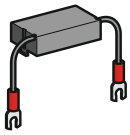

LA9 D09982

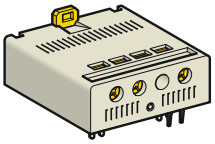

LA1 LD080●D

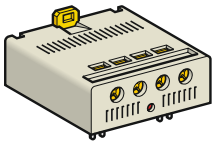

LA1 LD180BD
LA1 LD580●D

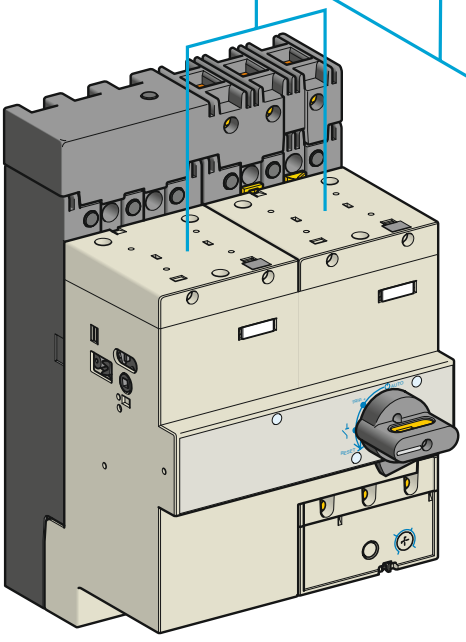

LD5 LD+LB● LD

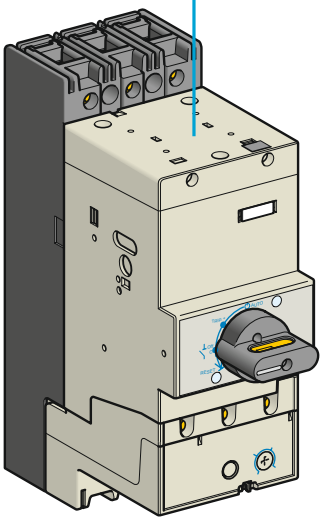

LD1 LD+LB● LD
LD4 LD+LB● LD

Motor starters - open version

Contactor breakers and reversing contactor breakers Integral 63

Accessories and spare parts

Interface modules (1)

Mounting	Type	Control voltage ⎓	Operational voltage 50/60 Hz	Reference
		V	V	
On top of the integral unit	Solid state	5…24	24…240	**LA1LD180BD**
	Relay output	24	24…240	**LA1LD580BD**
		48	24…240	**LA1LD580ED**

Replacement coils and voltage converters (1)

For ⎓ control circuit operation

Mounting	For use on integral	Operational voltage ⎓ (2)	Consumption		Description	Reference (3)
			Inrush	Sealed		
		V	W	W		
On top of the integral unit	LD● LD●●●BD	24 (4)	300	8	Coil	**LX1LD0249**
					Converter	**LA1LD080BD**
	LD● LD●●●ED	48 (4)	300	8	Coil	**LX1LD0489**
					Converter	**LA1LD080ED**
	LD● LD●●●FD	110	300	8	Coil	**LX1LD01109**
					Converter	**LA1LD080FD**

Suppressor module

Mounting	Type	Operational voltage 50/60 Hz	Reference
		V	
Clip-on	RC circuit (Resistor-Capacitor) (5)	⩽ 250	**LA9D09982**

(1) For reversing contactor breakers, order 2 interface modules or 2 voltage converters.

(2) When used on rectified single-phase or 3-phase supply, the peak to peak ripple voltage must be equal to or less than 0.14 of the average voltage.
Operating limits 0.8 to 1.1 Uc for an ambient temperature ⩽ 40 °C.

(3) It is essential that the voltage converter be associated with the specific coil indicated.

(4) 24 V and 48 V converters can be operated by "Low level input". In this case, the control circuit voltage must be the same as the supply voltage (24 or 48 V).

(5) An RC circuit provides effective protection for circuits highly sensitive to high frequency interference.
Voltage limited to 3 Uc max. and oscillating frequency limited to 400 Hz max.
Slight increase in drop-out time (1.2 to 2 times the normal time).

Motor starters - open version

Contactor breakers and reversing contactor breakers Integral 63

Accessories

812500.eps

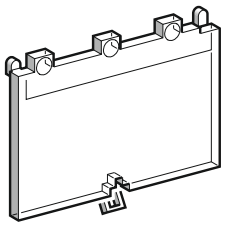

LA1 LC090

812501.eps

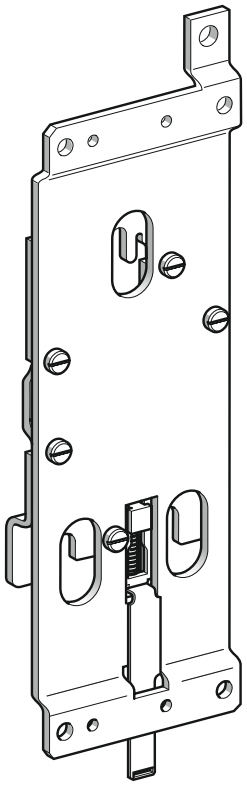

LA9 LD010

Protection accessories

Description	For use on	Sold in lots of	Unit reference
Power terminal protection shroud	Upstream power terminals (L1, L2, L3)	5	**LA9LD701**
Sealing cover	Protection module	1	**LA1LC090**

Mounting accessories

Description	For use on	Mounting on	Reference
Mounting plate	LD1, LD4, LD5	1 x 75 mm ⊔ rail or 2 x 32 mm ⊔ rails	**LA9LD010**

Door interlock mechanisms (IP 54)

Type	For use on	Colour of knob	Unit reference
Adjustable from 0 to 185 mm with extension (control knob mounted on plate or door)	LD1	Red	**LA9LC330**
		Black	**LA9LC331**
	LD4, LD5	Red	**LA9LC530**
		Black	**LA9LC531**

Motor starters - open version

Contactor breakers and reversing contactor breakers Integral 63

Coils (replacement parts)

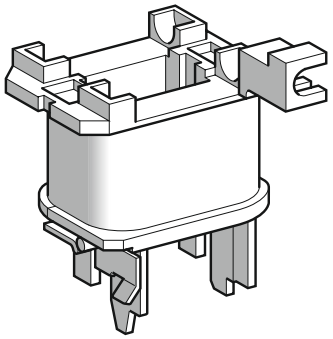

LX1 LD●●●

a.c. operation

Rated control circuit voltages		Average resistance at 20 °C ±10 %	Inductance of closed circuit	Voltage code (1)	Reference
Uc 50 Hz	Uc 60 Hz				
V	V	Ω	H		
–	24	0.213	0.045	**BC**	**LX1LD020**
24	–	0.323	0.071	**B**	**LX1LD024**
–	36	0.503	0.106	**CC**	**LX1LD030**
–	48	0.845	0.19	**CE**	**LX1LD040**
42	–	0.987	0.22	**D**	**LX1LD042**
48	–	1.26	0.29	**E**	**LX1LD048**
–	110	4.88	1	**K**	**LX1LD090**
–	115/120	5.89	1.18	**FC**	**LX1LD100**
110	–	6.48	1.48	**F**	**LX1LD110**
127	–	9.80	2.13	**G**	**LX1LD127**
–	220	19.82	4.2	**LC**	**LX1LD180**
–	230/240	23.24	4.5	**MC**	**LX1LD190**
220/230	–	30.51	6.7	**M**	**LX1LD220**
240	–	37.66	7.9	**U**	**LX1LD240**
–	440	80.46	16.7	**UX**	**LX1LD360**
380/400	460/480	93.63	20	**Q**	**LX1LD380**
415/440	–	116.46	23.7	**N**	**LX1LD415**
500	575/600	152.18	31	**S**	**LX1LD500**
660	–	290.80	60	**Y**	**LX1LD660**

Consumption at 50 Hz: inrush (cos φ: 0.55) 350 to 400 VA; sealed (cos φ: 0.28) 20 to 30 VA.

Consumption at 60 Hz: inrush (cos φ: 0.55) 420 to 500 VA; sealed (cos φ: 0.30) 24 to 36 VA.

d.c. operation

The Integral 63 can operate on a d.c. supply when fitted with a special coil and corresponding voltage converter: see page A5/11.

(1) Coil voltage reference code, used to complete the basic reference when ordering an integral unit.

Integral 63

Technical Data for Designers

Contents

Presentation ..... A5/16 to A5/21
Selection ..... A5/22 to A5/25
Characteristics ..... A5/26 to A5/31
Selection of protection module ..... A5/32 to A5/35
Operation ..... A5/36 and A5/37
Dimensions ..... A5/38 and A5/39
Schemes ..... A5/40 and A5/41

Motor starters - open version
Integral 63 contactor breakers and reversing contactor breakers

DF526454.tif



Integral 63: a high performance concept for reliability of operation

Integral 63 contactor breakers combine all the functions of a power switching assembly up to 63 A in a single compact device, with performance equivalent to that of the best separate specialist devices.

They conform to the main standards currently in force, in particular IEC 60947-1, IEC 60947-2, IEC 60947-3, IEC 60947-4-1 and IEC 60947-6-2 (welding of power poles impossible), as well as to international approvals UL, CSA…, and the European directives.

The integral range ensures reliability of operation up to 63 A. In addition to safety of operation, integral has numerous other functions: increased protection, communication, remote control, fault identification, isolation, padlocking.

Functions performed by Integral 63 units

The equipment in a power switching circuit must perform 4 main functions:
- power switching,
- isolation,
- overload protection,
- short-circuit protection.

These functions are traditionally performed by separate devices which must be combined to form a motor starter assembly, the most common being:
- fuses + contactor + thermal overload relay,
- circuit breaker + contactor + thermal overload relay.

DF526324.tif



Power switching

Contactor (for automatic and remote control)

- Operational power for use in category AC-43:
  - up to 30 kW at 400/415 V 50 Hz,
  - up to 33 kW at 440/415 V 50 Hz.

- Electrical life in number of operating cycles, in category AC-43, at 415 V and at rated power: 1.2 million.

- Mechanical life in number of operating cycles: 5 million.

DF526325.tif



Reversing pairs

Two 3-pole contactors, horizontally mounted:
- mechanically interlocked.

Can be fitted with the same protection modules as Integral 63 contactor breaker.

References:
pages A5/2 to A5/13

Dimensions, schemes:
pages A5/38 to A5/41

Motor starters - open version
Integral 63 contactor breakers and reversing contactor breakers

DF534529.tif



DF526327.tif



DF526328.tif



Functions performed by Integral 63 units (continued)

Isolation

Isolation conforming to IEC 60947

Integral 63 contactor breakers provide isolation and padlocking functions conforming to standards IEC 60947.
In addition, Integral 63 “LD4” contactor breakers and “LD5” reversing contactor breakers incorporate specific poles for control testing and padlocking.

Overload protection

Thermal-magnetic protection module (for protection against overload and overcurrent)

A range of interchangeable modules allows the equipment to be adapted to suit:
- the rated operational current (rating and settings),
- the application:
  - motors,
  - frequent starting motors,
  - distribution circuits.

Short-circuit protection

High breaking capacity current limiting circuit breaker

For short-circuit protection.

High breaking capacity with short-circuit limited by ultra-fast tripping.

Possibility of increasing the breaking capacity of the integral unit by adding a current limiter (**LA9 LB920**).

The current limiter is fitted upstream of the integral unit.
Several integral units may be fitted downstream of the current limiter (Ith = 63 A, Ie = 32 A).

Signalling and attachments

These devices provide comprehensive local signalling:
- pole position indicator,
- different signalling for “overload” and “short-circuit”.

They also allow dialogue with the automated control system by means of numerous add-on blocks:
- auxiliary contact and signalling blocks,
- remote electrical reset device,
- undervoltage and shunt trips,
- control circuit switching,
- etc.

Simple fixing and cabling methods

Integral 63 contractor breakers and reversing contactor breakers fit onto 75 mm ⎽ rails using a separate mounting plate.
integral units can also be mounted on:
- panels,
- pre-slotted mounting plates type AM1 P,
- 2 x 35 mm ⎽ rails using sliding clip nuts,
- CMD prefabricated plug-in busbar trunking (providing an economical assembly, combining safety and simplicity of use),
- AK5 panel busbar systems.

References:
pages A5/2 to A5/13

Dimensions, schemes:
pages A5/38 to A5/41

Motor starters - open version
Integral 63 contactor breakers and reversing contactor breakers

Terminology

Altitude

The rarefied atmosphere at high altitude reduces the dielectric strength of the air and hence the rated operational voltage of the contactor breaker. It also reduces the cooling effect of the air and hence the rated operational current of the contactor breaker (unless the temperature drops at the same time).

No derating is necessary up to 3000 m.

Derating factors to be applied above this altitude for main pole operational voltage and current (a.c. supply) are as follows:

Altitude	3500 m	4000 m	4500 m	5000 m
Rated operational voltage	0.90	0.80	0.70	0.60
Rated operational current	0.92	0.90	0.88	0.86

Ambient air temperature

The temperature of the air surrounding the device, measured near to the device.
The operating characteristics are given:
- with no restriction for temperatures between - 5 and + 55 °C.
- with restrictions, if necessary, for temperatures between - 50 and + 70 °C.

Rated operational current (Ie)

This is defined taking into account the rated operational voltage, operating rate and duty, utilisation category and air temperature around the device.

Conventional rated thermal current (Ith) (1)

The current Ith which a closed contactor breaker can sustain for a minimum of 8 hours without its temperature rise exceeding the limits given in the standards.

Short time rating

The current which a closed contactor breaker can sustain for a short time, after a period of no load, without dangerous overheating.

Rated operational voltage (Ue)

This is the voltage value which, in conjunction with the rated operational current, determines the use of the contactor breaker or starter, and on which the corresponding tests and the utilisation category are based. For 3-phase circuits, it is expressed as the voltage between phases.
Apart from exceptional cases such as rotor short-circuiting, the rated operational voltage Ue is less than or equal to the rated insulation voltage Ui.

Rated control circuit voltage (Uc)

The rated value of the control circuit voltage, on which the operating characteristics are based. For a.c. applications, the values are given for a near sinusoidal wave form (less than 5 % total harmonic distortion).

Rated insulation voltage (Ui)

This is the voltage value used to define the insulation characteristics of a device and referred to in dielectric tests determining leakage paths and creepage distances. As the specifications are not identical for all standards, the rated values given for each of them are not necessarily the same.

Rated impulse withstand voltage (Uimp)

This is the highest peak value of an impulse voltage, of prescribed form and polarity, which the device is able to withstand without failure under specified test conditions, and to which isolation clearance values are referred.
The rated impulse withstand voltage of a device must be equal to or higher than the values stated for the transient overvoltages appearing in the circuit in which the device is fitted.

Note: *these definitions are based on extracts from standard IEC 60947.*

(1) *Conventional free air thermal current, conforming to IEC standards.*

References:
pages A5/2 to A5/13

Dimensions, schemes:
pages A5/38 to A5/41

Motor starters - open version

Integral 63 contactor breakers and reversing contactor breakers

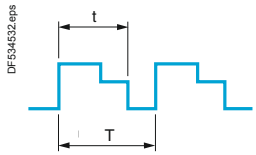

Terminology

Rated operational power (expressed in kW)

The rated power of the standard motor which can be switched by the contactor breaker, at the stated operational voltage.

Rated breaking capacity (Iq) (1)

This is the current value which the contactor breaker can break in accordance with the breaking conditions specified in the IEC standard.

Rated making capacity (1)

This is the current value which the contactor breaker can make in accordance with the making conditions specified in the IEC standard.

On-load factor (m)

This is the ratio between the time the current flows (t) and the duration of the cycle (T):

$$m = \frac{t}{T}$$

Cycle duration: duration of current flow + time at zero current.

Pole impedance

The impedance of one pole is the sum of the impedance of all the circuit components between the input terminal and the output terminal.

The impedance comprises a resistive component (R) and an inductive component $X = L\omega$). The total impedance therefore depends on the frequency and is normally given for 50 Hz. The average value is given for the pole at its rated operational current.

Electrical durability

This is the average number of on-load operating cycles which the main pole contacts can perform without maintenance. The electrical durability depends on the utilisation category, the rated operational current and the rated operational voltage.

Mechanical durability

This is the average number of no-load operating cycles (i.e. with zero current flow through the main poles) which the contactor breaker can perform without mechanical failure.

Coordination

The coordination of protection devices involves combining, in a selective way, a short-circuit protection device (fuses or magnetic circuit-breakers) with a contactor and an overload protection device. Its objective is to break any abnormal current, in plenty of time, without any danger to personnel, whilst providing adequate protection of the equipment against an overload or short-circuit current.

Type 1 - IEC 60947-4-1

In a short-circuit condition, the contactor or starter must not present any danger to personnel or installations and may not be able to resume operation without repair or the replacement of parts.

Type 2 - IEC 60947-4-1

In a short-circuit condition, the contactor or starter must not present any danger to personnel or installations and must be able to resume operation. The risk of contact welding is permissible if they can be easily separated.

Total, ensuring reliability of operation - IEC 60947-6-2

In the event of a short-circuit, no damage or risk of welding is permissible on the equipment constituting the motor starter. Operation can be resumed without any maintenance.

Note: *these definitions are based on extracts from standard IEC 60947.*

(1) For a.c. applications, the breaking and making capacities are expressed by the rms value of the symmetrical component of the short-circuit current. Taking into account the maximum asymmetry which may exist in the circuit, the contacts therefore have to withstand a peak asymmetrical current which may be twice the rms symmetrical component.

References:
pages A5/2 to A5/13

Dimensions, schemes:
pages A5/38 to A5/41

Motor starters - open version
Integral 63 contactor breakers and reversing contactor breakers

Definition

The standard utilisation categories define the current values which the contactor breaker must be able to make or break. These values depend on:
- the type of load being switched: squirrel cage or slip ring motor, resistors,
- the conditions under which making or breaking takes place: motor stalled, starting or running, reversing, plugging.

Reminder of standards IEC 60947

- **IEC 60947-1**: general rules,
- **IEC 60947-2**: circuit breakers,
- **IEC 60947-3**: isolating devices,
- **IEC 60947-4-1**: contactors and motor starters,
- **IEC 60947-5-1**: control and signalling units,
- **IEC 60947-6-2**: control and protection devices,

Standards for contactor breakers

IEC 60947-4-1

Standard IEC 60947-4-1: covers contactors and electromechanical motor starters.
It concerns:
- types of equipment with main contacts designed for connection to circuits whose rated operational voltage does not exceed 1000 V for a.c. applications or 1500 V for d.c. applications,
- contactors used in conjunction with overload and/or short-circuit protection devices,
- motor starters used in conjunction with separate short-circuit protection devices and/or with separate short-circuit protection devices and built-in overload protection devices,
- contactors and combination motor starters which incorporate their own short-circuit protection device.

IEC 60947-6-2

Standard IEC 60947-6: covers multi-function equipment.
It concerns connection, power switching and protection devices (or equipment) with main contacts designed for connection to circuits whose rated operational voltage is less than or equal to 1000 V for a.c. applications, or 1500 V for d.c. applications. Such devices are designed to perform both the power switching function and the protection of remotely controlled circuits function; they can also perform other functions, such as isolation.
After short-circuit (Isc) tests, the products must be able to make and break the currents corresponding to the specified utilisation categories, and to the number of operating cycles specified in the standard, without failing. This series of tests is completed by temperature rise tests.
Standard IEC 947-6-2 specifies that, in the event of a short-circuit, no damage or risk of contact welding is permissible on the devices constituting the motor starter.
The integral contactor breaker, through its design, ensures reliability of operation. After eliminating the fault, operation can be resumed instantly without any maintenance work on the product, other than resetting.

Utilisation categories for a.c. applications

Category AC-1

This category applies to all types of a.c. device (load) with a power factor equal to or greater than 0.95 ($\cos \varphi \leqslant 0.95$). Non inductive or slightly inductive loads.
Application examples: heating, distribution.

Category AC-2

This category applies to starting, plugging and inching of slip ring motors.
- On closing, the contactor breaker makes the starting current, which is about 2.5 times the rated current of the motor.
- On opening, it must break the starting current, at a voltage less than or equal to the mains supply voltage.

Category AC-3

This category applies to squirrel cage motors with breaking while motor running.
- On closing the contactor breaker makes the starting current, which is about 5 to 7 times the rated current of the motor.
- On opening, it breaks the rated current drawn by the motor; at this point, the voltage at the contactor breaker terminals is about 20 % of the mains supply voltage. Breaking is light.

Application examples: all standard squirrel cage motors (lifts, escalators, conveyor belts, bucket elevators, compressors, pumps, mixers, air conditioning units, etc.).

References:
pages A5/2 to A5/13

Dimensions, schemes:
pages A5/38 to A5/41

Motor starters - open version
Integral 63 contactor breakers and reversing contactor breakers

Standards for contactor breakers

Utilisation categories for a.c. applications

Category AC-4

This category covers starting, plug braking and inching of squirrel cage motors. On closing, the contactor breaker makes a current peak which may be as high as 5 to 7 times the rated motor current. On opening, it breaks this same current at a voltage which is higher, the lower the motor speed. This voltage can be the same as the mains voltage. Breaking is severe.
Application examples: printing machines, wire drawing machines, hoisting equipment, metallurgy industry.

Category AC-41

This category applies to all types of a.c. device (load) with a power factor equal to or greater than 0.95 ($\cos \varphi \leqslant 0.95$). Non inductive or slightly inductive loads.
Application examples: heating, distribution.

Category AC-42

This category applies to starting, plugging and inching of slip ring motors.
■ On closing, the contactor breaker makes the starting current, which is about 2.5 times the rated current of the motor.
■ On opening, it must break the starting current, at a voltage less than or equal to the mains supply voltage.

Category AC-43

This category applies to squirrel cage motors with breaking while motor running; inching or occasional reversing of limited duration are permissible if the number of operating cycles does not exceed 5 per minute, or 10 within a 10 minute period.
■ On closing the contactor breaker makes the starting current, which is about 5 to 7 times the rated current of the motor.
■ On opening, it breaks the rated current drawn by the motor; at this point, the voltage at the contactor breaker terminals is about 20% of the mains supply voltage. Breaking is light.
Application examples: all standard squirrel cage motors: lifts, escalators, conveyor belts, bucket elevators, compressors, pumps, mixers, air conditioning units, etc.).

Category AC-44

This category covers applications with plug braking and inching of squirrel cage or slip ring motors.
On closing, the contactor breaker makes a current peak which may be as high as 5 to 7 times the rated motor current. On opening, it breaks this same current at a voltage which is higher, the lower the motor speed. This voltage can be the same as the mains voltage. Breaking is severe.
Application examples: printing machines, wire drawing machines, hoisting equipment, metallurgy industry.

Tripping classes of protection modules

The creation of thermal tripping classes allows better adaptation of the thermal protection to suit different motor and application technologies (short or long starting times). Conforming to IEC 60947-4-1 and IEC 60947-6-2.

Class	10 A	10	20	30
Tripping time at 7.2 Ir (1)	2…10 s	4…10 s	6…20 s	9…30 s

Standards for auxiliary contacts

IEC 60947-5

Standard IEC 60947-5-1: covers switching devices and components for control circuits.
It concerns electromechanical devices for control circuits.

Utilisation categories for a.c. applications

Category AC-14 (2)

This category applies to the switching of electromagnetic loads whose power drawn with the electromagnet closed is less than 72 VA.
Application example: switching the operating coil of contactors and relays.

Category AC-15 (2)

This category applies to the switching of electromagnetic loads whose power drawn with the electromagnet closed is greater than 72 VA.
Application example: switching the operating coil of contactors.

Utilisation categories for d.c. applications

Category DC-13 (3)

This category applies to the switching of electromagnetic loads for which the time taken to reach 95 % of the steady state current (T = 0.95) is equal to 6 times the power P drawn by the load (with $P \leqslant 50$ W).
Application example: switching the operating coil of contactor breakers.

(1) Ir = protection module setting current.
(2) Replaces category AC-11.
(3) Replaces category DC-11.

References:
pages A5/2 to A5/13

Dimensions, schemes:
pages A5/38 to A5/41

Motor starters - open version
Integral 63 contactor breakers and reversing contactor breakers

When designing an installation, it is essential to take into account precise criteria for determining the conductor c.s.a. and selecting equipment.
In particular:
- permissible currents for the conductors,
- maximum voltage drops,
- short-circuit protection,
- protection against indirect contact.

The latter three criteria must be taken into account when selecting the integral unit.

The principle behind the rules described below is, on the whole, common to all European publications. However, the calculations and values concerning protection against indirect contact are based on French standard NF C 15-100, and it is up to the user to check the regulations in force in the country concerned.

Cable protection against overload

To achieve this, the thermal setting value Irth selected must be greater than the current drawn I_B and less than or equal to the permissible current Iz in the cable to be protected.
$I_B < Irth \leqslant Iz$

Short-circuit protection

Breaking capacity rule

Check that the breaking capacity (BC) of the integral unit is equal to or greater than the prospective short-circuit current (Isc max) at the point where it is to be installed.
$BC \geqslant Isc\ max$

Breaking time rule

2 conditions must be fulfilled:
- The short-circuit current at the end of the circuit, Isc min, must be greater than or equal to the minimum current required for magnetic tripping of the device,
- The short-circuit current at the start of the circuit, Isc max, must be such that:

$\mathbf{I^2sc\ max\ t_m \leqslant I^2_o t_o}$

$\mathbf{I^2_o t_o}$ = permissible thermal stress limit for the circuit,
$\mathbf{t_m}$ = operating time of the integral unit or of the short-circuit protection device.

These 2 checks need only be made when modules with a low rating are used.
Example: for a 6.3/10 A module, a cable c.s.a. $\geqslant$ 2.5 mm² is required to withstand Isc max = 50 kA.

Protection against indirect contact in TN schemes

TN multiple earthed neutral scheme

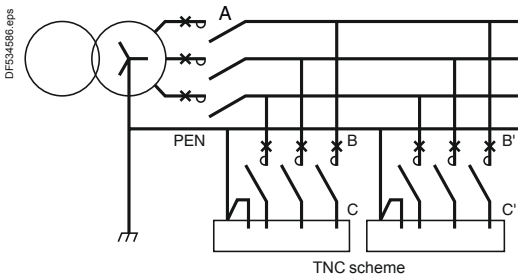

TNC scheme

- Neutral is connected to earth.
- The earths are connected to neutral.
- Any phase/earth insulation fault causes a short-circuit.
- As contact voltage is dangerous, breaking must occur at the first fault.
- The PE conductor and the neutral conductor may be:
  - ☐ combined (TNC scheme),
  - ☐ separate (TNS scheme).

Motor starters - open version
Integral 63 contactor breakers and reversing contactor breakers

Protection against indirect contact in TN schemes

■ Protection against indirect contact (TN schemes), for dead shorts only, requires that the following 2 conditions be fulfilled simultaneously:

□ the fault current Id must be greater than or equal to the minimum current required for magnetic tripping of the integral unit, i.e. 1.12 μ Irth max.

$$Id = c.q.\frac{Uo}{Zb}$$

$$R = \rho\frac{L}{S} = 2\rho\frac{Lc}{S}$$

c = coefficient taking into account the upstream part of the fault loop impedance assumed to be equal to 0.8, unless otherwise indicated.
q = coefficient dependent on the earth connection scheme and equal to 1 in the TN scheme.
Uo = phase-neutral voltage in volts.
Zb = fault loop impedance in mΩ/m such that:
Zb ≠ R (fault loop resistance).
L = length of the fault loop equal to twice the length **Lc** of the circuit.
S = Sph, c.s.a of the phase conductors = S_{PE} = c.s.a. of the protective conductors.
ρ = resistivity of the copper = 0.0225.
μ = ratio between the magnetic tripping current and the maximum setting current of the instantaneous thermal tripping device.

□ the contact voltage (U_L) for a dead short is at most equal to the value determined by the safety curve for the operating time tm of the integral unit in its magnetic tripping zone.
This condition is generally fulfilled for power supplies of 230/415 V.
(In fact, for U_L = 50 V, a tm ⩽ 500 ms would be required and for U_L = 25 V, a tm ⩽ 110 ms would be required).

The first condition allows us to calculate the maximum length of the circuit to provide protection against indirect contact in the TN scheme.
For the TN scheme:

$$L \leqslant \frac{c.q.Uo.Sph}{2\rho.1.\mu\ Irth}$$

i.e. $$L\ max = \frac{0.8 \times Uo \times Sph}{2 \times 0.0225 \times 1.2\ \mu\ Irth\ max}$$

Maximum length of 230/415 V circuits with TN scheme

C.s.a.	Irth max.	μ = 3	μ = 6	μ = 12	μ = 15
mm²	A	m	m	m	m
1.5	10	180	90	45	36
	16	112	56	28	22
2.5	10	298	149	75	60
	16	186	93	47	37
	25	118	59	32	–
	32	92	46	23	–
4	16	296	148	74	60
	25	190	95	48	–
	32	148	74	37	–
	40	118	59	30	–
6	25	284	142	71	–
	32	222	111	56	–
	40	178	89	45	–
	50	142	71	36	–
10	32	370	185	93	–
	40	296	148	74	–
	50	236	118	59	–
	63	188	94	47	–
16	32	590	295	148	–
	40	472	236	118	–
	50	378	189	95	–
	63	300	150	75	–
25	32	922	461	281	–
	40	738	369	185	–
	50	590	295	148	–
	63	468	234	117	–

General:
pages A5/16 to A5/21

References:
pages A5/2 to A5/13

Dimensions, schemes:
pages A5/38 to A5/41

Motor starters - open version

Integral 63 contactor breakers and reversing contactor breakers

Selection for a temperature θ ≤ 40 °C						
Rated operational voltage	**V**	**220/240**	**400/415**	**440**	**480/525**	**600/690**
Rated operational currents (according to the rated operational voltage)						
Integral 63	**A**	63	63	63	63	63
Rated operational powers (for standard motors)						
Integral 63	**kW**	15	33	33	37	55

Electrical durability

Control and protection of motors at Ue ≤ 415 V

- in utilisation categories AC2, AC3 conforming to IEC 60947-4-1,
- in utilisation categories AC2, AC3 conforming to IEC 60947-6-2.

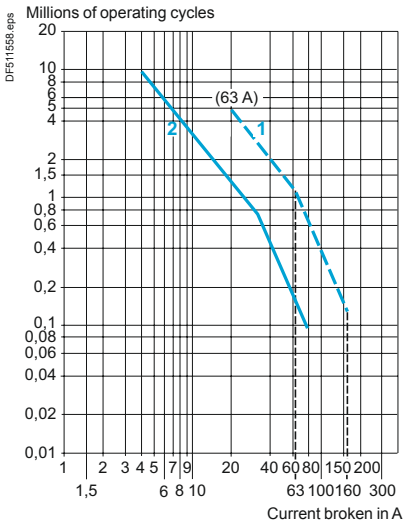

1 Not having previously broken a short-circuit current
2 Having broken a short-circuit current 10 times at 30 Ie (most common values of short-circuit current during operation)

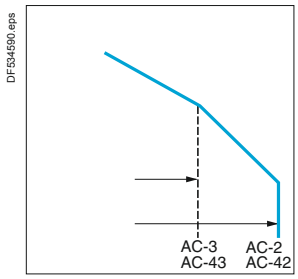

Motor starters - open version

Integral 63 contactor breakers and reversing contactor breakers

a.c. supply, utilisation categories AC-1, AC-3, AC-41, AC-43

Rated operational currents (according to ambient temperature)

	With cable c.s.a.		θ ≤ 40 °C	θ ≤ 55 °C	θ ≤ 70 °C
Integral 63	16 mm²	**A**	63	55	50

a.c. supply, utilisation categories AC-1, AC-41

Maximum operating rates in operating cycles/hour

		On-load factor 85 %		On-load factor 25 %
		Operation at Ie max	Operation at 0.5 Ie	Operation at Ie max
Integral 63	**Operating cycles/h**	1200	2400	1800

Electrical durability Ue ≤ 415 V

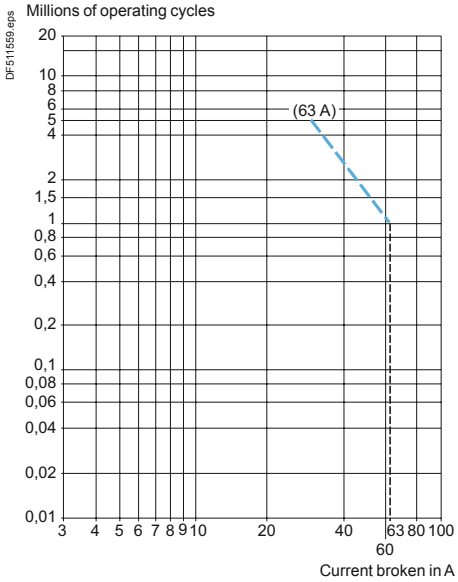

Note: *for use in category AC-44, please consult your Regional Sales Office.*

Motor starters - open version
Contactor breakers and reversing contactor breakers Integral 63

Integral 63

Type			Integral 63
Number of poles			3
Rated operational current (Ie)	In AC-3	**A**	63
Rated operational voltage (Ue)		**V**	690
Electrical durability	In AC-3 at 400 V		1.2 million operating cycles
Mechanical durability at Uc			5 million operating cycles
Maximum operating rate at ambient temperature ≤ 55 °C	~		3600 operating cycles/hour
	⎓ with converter		600 operating cycles/hour
Environment			
Conforming to standards			IEC: 158-1, 204-1, 204-2, 364, 947-1/2 and 4
			UTE: NF C 63-110, C 63-120, C 63-130, C 63-650, C 79-100, C 20-040
			VDE: 0100, 0110, 0113, 0170, 0171, 471, 0660
			BS: 5424, 4752, 4941
			NEN, NBN
Product certifications			ASE, ASEFA, ASTA, BV, CSA, DEMKO, DNV, GL NEMKO, NKK, ÖVE, RINA, SCC, SETI, UL, USSR, LROS
Protective treatment			"TH"
Ambient air temperature around the device	~ Operation	**°C**	-20…+60
	Storage	**°C**	-40…+80
	⎓ (1) Operation	**°C**	-25…+50
	Storage	**°C**	-25…+70
Vibration resistance Permissible acceleration	5…100 Hz		Energised state: 3 gn
			De-energised state: 3 gn
Shock resistance Permissible acceleration	Impulse duration: 11 ms		Energised state: 8 gn
			De-energised state: 8 gn
Degree of protection	Conforming to IEC 60144 & 60529		IP 20B
	Conforming to VDE 0106		Protection against direct finger contact
Flame resistance			Conforming to IEC 60295-2-1, NF C 20-455 and decree of 22-12-81 (JO 27 NC of 1st and 2/2/1982) Conforming to UL 94 - V0 and NF T 51-072
Maximum operating altitude	Without derating	**m**	3000
Operating positions (without derating)	In relation to normal vertical mounting plane		From main axis (left-right tilt) 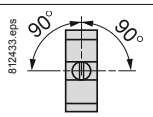
Control circuit characteristics			
Rated control circuit voltage (Uc)	~ 50 Hz	**V**	24…660
	~ 60 Hz	**V**	24…600
	⎓ with converter	**V**	24, 48, 110
Voltage limits at θ ≤ 55 °C	Operation		0.85…1.1 Uc
	Drop-out		0.25…0.7 Uc
Average consumption at 20 °C and at Uc	~ Inrush	**VA**	375 (50 Hz), 450 (60 Hz)
	Sealed	**VA**	25 (50 Hz or 60 Hz)
	⎓ (1) Inrush	**W**	300 for 50 ms
	Sealed	**W**	8
Heat dissipation		**W**	8 (50 Hz), 11 (60 Hz)
Operating time (2) at 20 °C and at Uc	~ 50/60 Hz "C"	**ms**	12…35
	"O"	**ms**	7…20
	⎓ with converter "C"	**ms**	25…40
	"O"	**ms**	15…25

(1) With converter.
(2) The closing time "C" is measured from the moment the coil supply is switched on to initial contact of the main poles.
The opening time "O" is measured from the moment the coil supply is switched off to the moment the main poles separate.

Motor starters - open version
Contactor breakers and reversing contactor breakers Integral 63

Pole characteristics

Type			Integral 63					
Conventional thermal current (Ith)	θ ≤ 40 °C	A	63					
Frequency limits of the operational current		Hz	40…60					
Rated impulse withstand voltage (Uimp)	Conforming to IEC 60947-4	kV	8					
Rated insulation voltage (Ui)	Conforming to IEC 60947-1	V	690					
Heat dissipation in the power circuits of the contactor breaker and its protection module	Operational current	A	25	32	40	50	63	
	Power per pole, hot state	W	4.4	5	5.8	7	9	
Rated making capacity								
I rms	Conforming to IEC 60947-4	A	12 or 15 x Ith (above this value. the breaker trips)					
I peak	Conforming to IEC 60947-2	kA	105					
Rated breaking capacity								
conforming to IEC 60947-2	Operational voltage	V	**220/240**	**380/415**	**440**	**480/525**	**600/690**	
	Value of cos φ		0.25	0.25	0.25	0.25	0.5	
	Cycle P1 (O-t-CO) Icu (1)	kA rms	50	50	50	35	10	
	Cycle P2 (O-t CO-t-CO) Ics (1)	kA rms	50	50	50	35	10	
conforming to IEC 60947-6-2 ensuring reliability of operation	Icu = Ics	kA rms	up to 80 (see table page A5/31)	up to 80 (see table page A5/31)	50	30	10	
Total breaking time		ms	4					
Electrical durability in AC-3 at Ie max and at 415 V after 1 cycle O-CO-r-CO at Isc	Prospective rms short-circuit current at terminals of a new device	kA	3	10	25	35	50	80
	Millions of operating cycles		1	0.9	0.6	0.5	0.2	(2)
Thermal limit	With Isc max. at 415 V, 50 Hz	A^2s	300 x 10^3					
Cabling			Maximum c.s.a.		Minimum c.s.a.			
	Flexible cable without cable end	mm^2	1 x 50 or 2 x 35		1 x 6			
	Flexible cable with cable end	mm^2	2 x 25		1 x 6			
	Solid cable	mm^2	1 x 50		1 x 6			
Tightening torque		N.m	6					

Characteristics of thermal-magnetic or magnetic only protection modules

Module type			LB1 LD03P	LB1 LD03M	LB6 LD03M	LB1 LD03L
Protection			Standard motors	Standard motors	Frequent starting	Distribution circuits
	Conforming to standards		NF C 63-650	NF C 63-650	NF C 63-650	NF C 63-120
	Number of poles		3	3	3	3
	Number of protected poles		3	3	3	3
	Rated operational voltage	V	690	690	690	690
	Max. continuous current	A	13…63	13…63	13…63	13…63
Thermal protection	Setting (Irth min./Irth max.)	A	10/13…45/63	10/13…45/63	–	10/13…45/63
	Temperature compensation	°C	-20…+60	20…+60	20…+60	20…+60
	Protection against phase imbalance		With	With	Without	Without
	Tripping class		20	20	–	–
Magnetic protection conforming to IEC 60947-1/2/4/6-2	Instantaneous trip current setting range		Fixed at 15 Irth max	6…12 Irth max (usual setting 9…10 Irth maxi)	6…12 Irth max	3…6 Irth max
	Tripping tolerance		±20 %	±20 %	±20 %	±20 %

Characteristics of versions without control test function, with padlocking facility

Conforming to standards			IEC 60947
Rated operational voltage		V	690
Mechanical durability	Operating cycles		10 000
Padlocking			By 1, 2 or 3 padlocks, Ø8 mm shank

Characteristics of versions with control test function and padlocking facility

Conforming to standards			IEC 60947, NF C 63-130, VDE 0660, VDE 0113
Rated operational voltage		V	690
Mechanical durability	Operating cycles		10 000
Padlocking			1, 2 or 3 padlocks, shank Ø8 mm max and Ø5 mm min. When flush mounting, interlocking of the enclosure or cabinet door is possible.

(1) O: breaking short-circuit current (open),
t: time
CO: closing on short-circuit, breaking short-circuit current (closed-open)
(2) Please consult us.

General: pages A5/16 to A5/21
Selection: pages A5/22 to A5/25
References: pages A5/2 to A5/13
Dimensions, schemes: pages A5/38 to A5/41

Motor starters - open version

Contactor breakers and reversing contactor breakers Integral 63

Add-on current limiter and auxiliary contacts

Instantaneous auxiliary contacts LA1 L●●

Conventional thermal current (Ith)		**A**	6				
Rated insulation voltage (Ui)	Conforming to IEC 60947-5-1	**V**	690				
Switching capacity	With U ≥ 17 V and I ≥ 10 mA	**mVA**	600				
Rated operational power ∼ category AC-15 (1)	**Voltage**	**V**	**48**	**110/127**	**220/240**	**380/415**	**440**
	1 million operating cycles	**VA**	300	500	600	520	500
	1.5 million operating cycles	**VA**	160	300	330	300	280
Making capacity	∼ category AC-15	**VA**	1500	3500	6000	7500	7000
Rated operational power ⎓ category DC-13 (2)	**Voltage**	**V**	**24**	**48**	**110**	**220**	**440**
	1 million operating cycles	**W**	120	90	75	68	61
	1.5 million operating cycles	**W**	70	50	38	33	28
Making capacity	⎓ category DC-13	**W**	800	700	400	260	220
Cabling		**mm²**	Maximum c.s.a.: 2 x 2.5 Minimum c.s.a.: 2 x 1				

Isolating auxiliary contacts LA1 LC03●

Conventional thermal current (Ith)		**A**	6				
Rated insulation voltage (Ui) Conforming to IEC 60947 and NF C 63-130	a.c. supply	**V**	690				
	d.c. supply	**V**	125				
Cabling		**mm²**	Maximum c.s.a.: 2 x 1.5 or 1 x 2.5				

Signalling contacts LA1 LC001

Conventional thermal current (Ith)		**A**	3			
Rated insulation voltage (Ui)	Conforming to IEC 60947-5-1	**V**	250			
Operational power for 200000 operating cycles ∼	**Voltage**	**V**	–	–	**110/127**	**220**
	Resistive load	**VA**	–	–	600	750
	Lamp load (3)	**VA**	–	–	90	125
	Inductive load (4)	**VA**	–	–	875	500
	Motor (5)	**VA**	–	–	160	200
⎓	**Voltage**	**V**	**24**	**48**	**110/125**	**200**
	Resistive load	**W**	100	100	50	50
	Lamp load (3)	**W**	50	50	6	7.5
	Inductive load (4)	**W**	75	75	50	50
	Motor (5)	**W**	75	75	6	7.5
Cabling		**mm²**	Maximum c.s.a.: 2 x 2.5 Minimum c.s.a.: 2 x 1			

(1) Electrical durability on an inductive load such as the coil of an electromagnet: making current (cos φ 0.7) = 10 times the power broken (cos φ 0.4).
(2) Electrical durability on an inductive load such as the coil of an electromagnet, the time constant increasing with the load.
(3) Lamp load: peak current = 10 times the rated current.
(4) Inductive load: cos φ 0.4 for a.c. operation; time constant 7 ms for d.c. operation.
(5) Motor: peak current = 6 times the rated current.

Motor starters - open version

Contactor breakers and reversing contactor breakers Integral 63

Interface modules and converters

Type			Interface modules			Converters					
Used for control of the integral 32			By a programmable controller, with a.c. control of the electromagnet			By a programmable controller, with d.c. control of the electromagnet Control on d.c. supply					
Ambient air temperature around the device											
	Storage	°C	-25…+70			-25…+50					
	Operation	°C	-25…+50			-25…+50					
Isolation		kV	rms voltage between inputs and outputs: 2.5			Common negative terminal					
Cabling	Min.	mm²	1 x 1			1 x 1					
	Max.	mm²	2 x 2.5			2 x 2.5					
Operating limits			0.85...10.1 Uc			0.8...1.1 Uc (2)					
Protection			Against reverse polarity (by diode) and against overvoltage			Against reverse polarity (by diode) and against overvoltage					
Module or converter type			**LA1 LC**			**LA1 LC**					
			580BD	**580ED**	**180BD**	**080BD**	**080ED**	**080FD**			
Control circuit characteristics											
Schemes			**LA1 LC●580●D**		**LA1 L●180BD**	**LA1 L●080BD** **LA1 L●080ED**		**LA1 L●080FD**			
			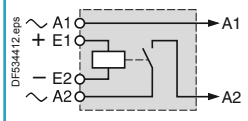		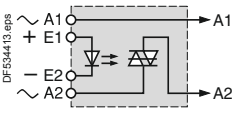	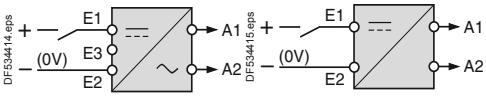					
Indication of input state			By LED		–	–					
Input signals (logic side)	**Voltage**	V	**⎓ 24 (E1-E2)**	**⎓ 48 (E1-E2)**	**⎓ 5…24 (E1-E2)**	**⎓ 24 (E1-E2)**	**⎓ 48 (E1-E2)**	**⎓ 5…24 (E1-E2)**	**⎓ 24 (1) (E3-E2)**	**⎓ 48 (1) (E3-E2)**	**–**	**⎓ 24 (1) (E3-E2)**	**⎓ 48 (1) (E3-E2)**	**–**
	Current	mA	30	20	15…24 V 8.5…5 V	50	25	15…24 V 8.5…5 V	20	10	–	20	10	–
State "0" guaranteed	For U	V	< 2.4	< 4.8	< 2.5	< 2.4	< 4.8	< 2.5	<7	< 14	–	< 7	<14	–
	For I	mA	< 2	< 2	< 2	< 2	< 2	< 2	< 5	< 2.5	–	< 5	< 2.5	–
State "1" guaranteed	For U	V	> 20.4	> 40.8	> 4	> 20.4	> 4	> 4	> 14	> 28	–	> 14	> 28	–
Supply voltage		V	∼ 24…240 (A1-A2)	∼ 24…240 (A1-A2)	∼ 24…240 (A1-A2)	∼ 24…240 (A1-A2)	∼ 24…240 (A1-A2)	∼ 24…240 (A1-A2)	⎓ 24 (2) (E1-E2)	⎓ 48 (2) (E1-E2)	⎓ 110 (2) (E1-E2)	⎓ 24 (2) (E1-E2)	⎓ 48 (2) (E1-E2)	⎓ 110 (2) (E1-E2)
Operating characteristics														
Electrical durability in millions of operating cycles			5						1					
Average consumption	Inrush 50 Hz	VA	160	160	160	375	375	375	–	–	–	–	–	–
	60 Hz	VA	185	185	185	450	450	450	–	–	–	–	–	–
	⎓	W	–	–	–	–	–	–	250	250	250	300	300	300
	Sealed 50/60 Hz	VA	12	12	12	25	25	25	–	–	–	–	–	–
	⎓	W	–	–	–	–	–	–	4	4	4	8	8	8
Operating time at 20 °C and at Uc	Pull-in	ms	15…30	15…30	10…35	20…40	20…40	10…45	30	30	30	35	35	35
	Drop-out	ms	22…35	22…35	8…30	25…45	25…45	8…30	15	15	15	20	20	20

(1) For direct control by external contact: connect E1-E3.

(2) Warning: for supply from rectified a.c., the 2 following conditions must be met: the power supply must exceed 300 VA and the maximum ripple must be ⩽ 14 %.

Motor starters - open version

Contactor breakers and reversing contactor breakers Integral 63

Tripping and reset devices, coil suppressor module

Environment				
Conforming to standards			IEC 60337-1	
Protective treatment			"TH"	
Ambient air temperature around the device	Storage	°C	-40…+80	
	Operation	°C	-25…+55	
	Permissible for operation at Uc	°C	-25…+70	
Protection against direct finger contact			Conforming to VDE 0106	

Tripping devices				
Type			**LA1 LC070●, LC072●**	**LA1 LC071●**
Pull-in voltage	Uc		0.8…1.1	0.7…1.1
Drop-out voltage	Uc		0.35…0.7	–
Average consumption	Inrush	VA	8	8
	Sealed	VA	4	4
Minimum pulse time		ms	–	10

Reset devices			
Type			**LA1 LC052●**
Consumption		VA	9
Duration of a reset cycle		s	9
Minimum pulse duration		s	0.5

Suppressor module LA9 D09982			
Type of protection			RC (resistor-capacitor)
Connection scheme			
Operational voltage		V	≤ 250

Motor starters - open version

Contactor breakers and reversing contactor breakers Integral 63

Breaking capacity of Integral 63 contactor breakers, according to the operational voltage and protection module fitted.

Breaking capacity

Protection module			Operational voltage				
Reference	Irth		220/240 V	400/415 V	440 V	500 V	600/690 V
	min	max					
	A	A	kA	kA	kA	kA	kA
LB● LD03●16	10	13	⩾ 130	⩾ 130	⩾ 130	⩾ 130	10
LB● LD03●21	13	18	⩾ 130	⩾ 130	⩾ 130	⩾ 130	10
LB● LD03●22	18	25	⩾ 130	⩾ 130	50	35	10
LB● LD03●53	23	32	⩾ 130	80	50	35	10
LB● LD03●55	28	40	⩾ 130	80	50	30	10
LB● LD03●57	35	50	⩾ 130	80	50	30	10
LB● LD03●61	45	63	⩾ 130	50	50	30	10

Motor starters - open version

Contactor breakers and reversing contactor breakers Integral 63

Motor protection (normal starting)

By thermal-magnetic modules LB1 LD03P (1)

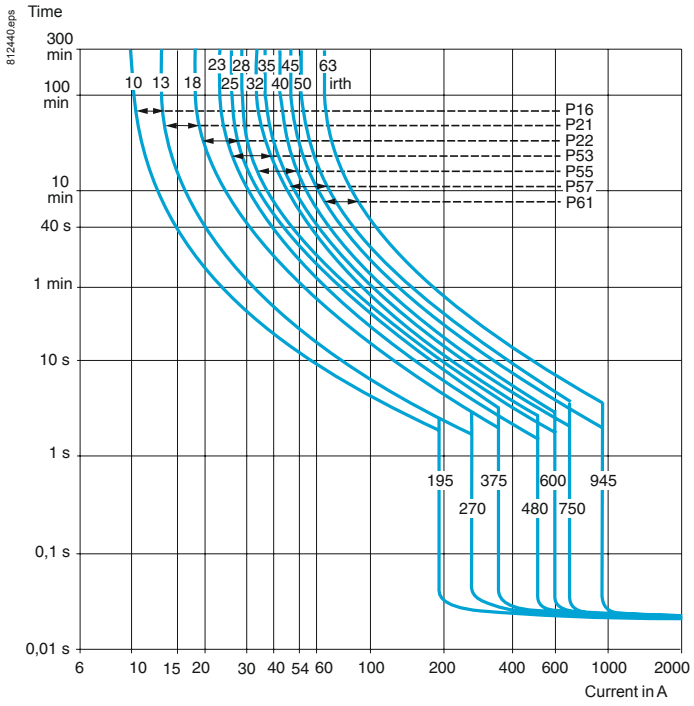

By thermal-magnetic modules LB1 LD03M (1)

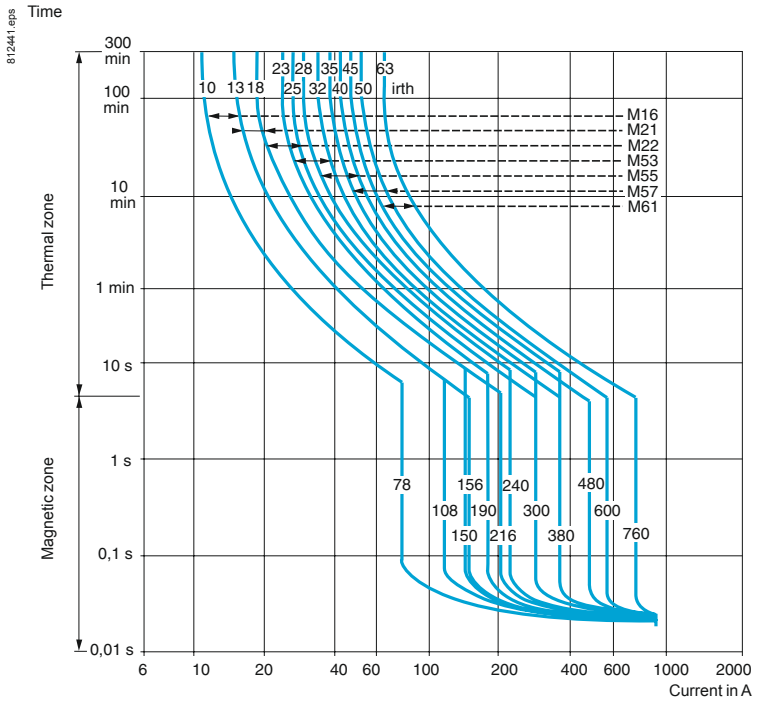

(1) Thermal protection: the average operating times shown in the above curves are for an ambient air temperature of 20 °C, without prior current flow (cold state). The average operating times after prolonged current flow (hot state) can be calculated by applying the coefficient 0.5.

Motor starters - open version

Contactor breakers and reversing contactor breakers Integral 63

Motor protection (frequent starting)

By magnetic modules LB6 LD03M

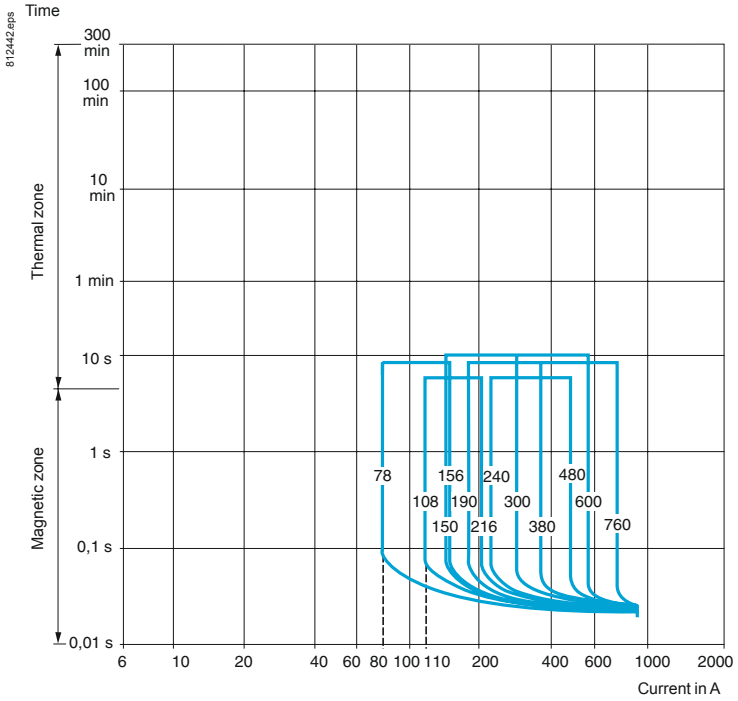

Distribution circuit protection

By thermal-magnetic modules LB1 LD03L

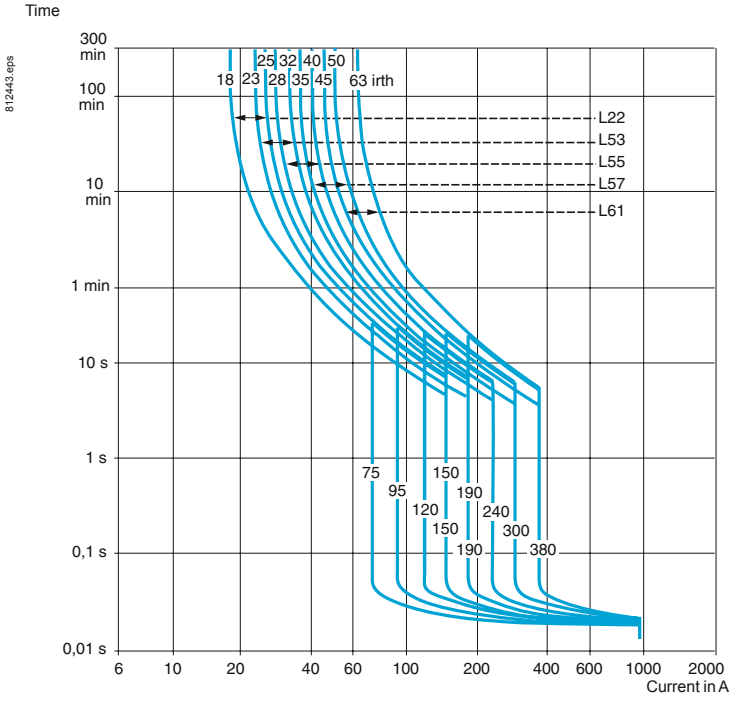

Motor starters - open version

Contactor breakers and reversing contactor breakers Integral 63

Current limitation and thermal limit on short-circuit

3-phase 400/415 V, 50 Hz

Current limitation on short-circuit

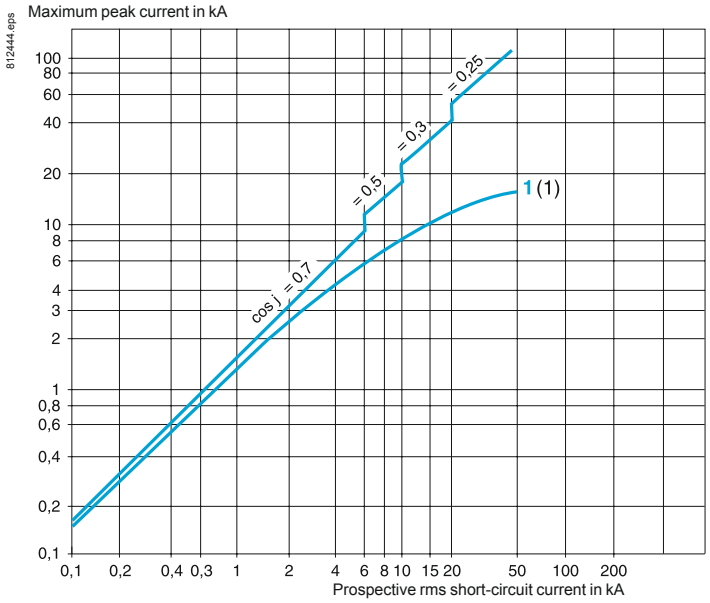

1 18 to 25 A up to 45 to 63 A

Maximum thermal limit on short-circuit

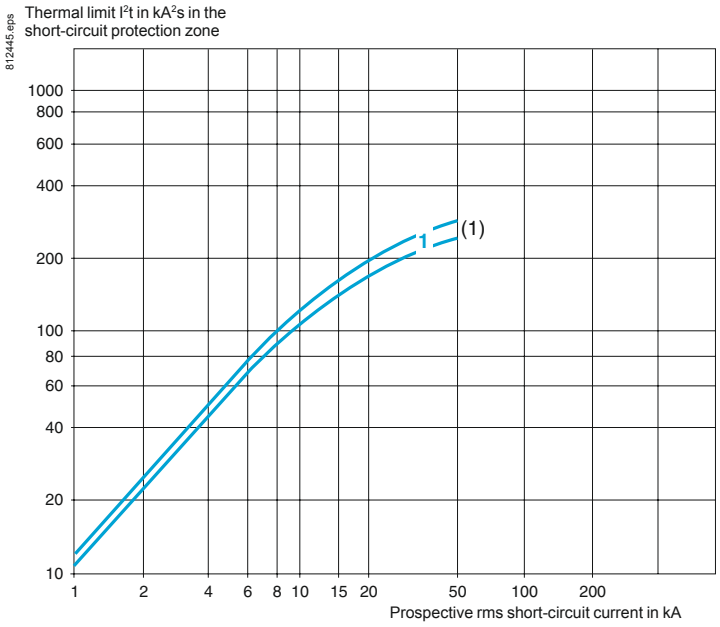

1 18 to 25 A up to 45 to 63 A

(1) ***LB1 LD03●22*** *to* ***LD06●61****: rating of associated thermal overload module.*

Motor starters - open version

Contactor breakers and reversing contactor breakers Integral 63

Current limitation and thermal limit on short-circuit

3-phase 480/500 V, 50 Hz

Current limitation on short-circuit

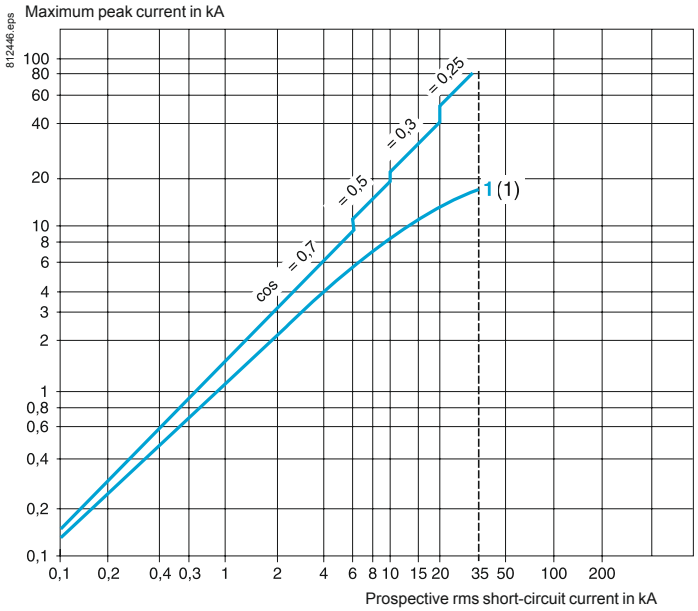

1 18 to 25 A up to 45 to 63 A

Current limitation on short-circuit

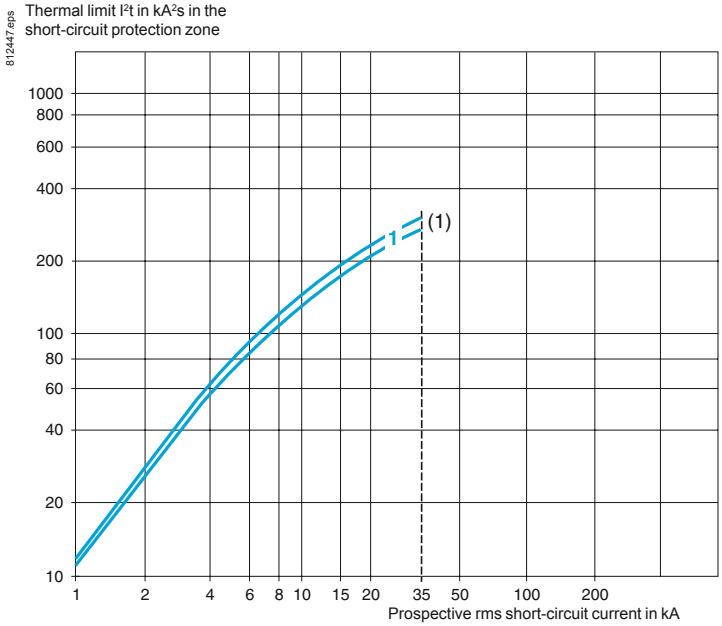

1 18 to 25 A up to 45 to 63 A

(1) ***LB1 LD03●22*** *to* ***LD03●61****: rating of associated thermal overload module.*

Motor starters - open version

Contactor breakers Integral 63

Auxiliary contact states according to the positions of the control knob

DF534578.eps

LD1

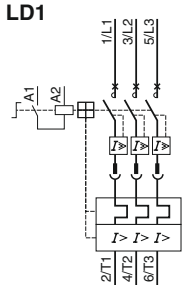

LD4

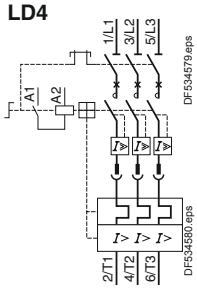

DF534579.eps

DF534580.eps

Contact open

Contact closed

DF534581.eps

LD1	LD4	Auxiliary contact actuators												
			Auto + 0		I> I> U<			I> I> U<		I> I> U<				
Auxiliary contacts		**LA1 LC010**				**LA1 LC012**			**LA1 LC025**			**LA1 LC001**	**LA1 LC020**	**LA1 LC030**
		13 23 31 / 14 24 32	16 18 / 15	06 08 / 05	96 98 / 95	13 23 31 / 14 24 32	08 / 05	98 / 95	13 23 31 / 14 24 32	96 98 / 95 95		41 / 42	13 23 31 / 14 24 32	53 / 54
Off + control test function		13 23 31 / 14 24 32	16 18 / 15	06 08 / 05	96 98 / 95	13 23 31 / 14 24 32	08 / 05	98 / 95	13 23 31 / 14 24 32	96 98 / 95 95		41 / 42	13 23 31 / 14 24 32	53 / 54
Off		13 23 31 / 14 24 32	16 18 / 15	06 08 / 05	96 98 / 95	13 23 31 / 14 24 32	08 / 05	98 / 95	13 23 31 / 14 24 32	96 98 / 95 95		41 / 42	13 23 31 / 14 24 32	53 / 54
On, contactor open		13 23 31 / 14 24 32	16 18 / 15	06 08 / 05	96 98 / 95	13 23 31 / 14 24 32	08 / 05	98 / 95	13 23 31 / 14 24 32	96 98 / 95 95		41 / 42	13 23 31 / 14 24 32	53 / 54
On, contactor closed		13 23 31 / 14 24 32	16 18 / 15	06 08 / 05	96 98 / 95	13 23 31 / 14 24 32	08 / 05	98 / 95	13 23 31 / 14 24 32	96 98 / 95 95		41 / 42	13 23 31 / 14 24 32	53 / 54
Off after overload		13 23 31 / 14 24 32	16 18 / 15	06 08 / 05	96 98 / 95	13 23 31 / 14 24 32	08 / 05	98 / 95	13 23 31 / 14 24 32	96 98 / 95 95		41 / 42	13 23 31 / 14 24 32	53 / 54
Tripped on overload		13 23 31 / 14 24 32	16 18 / 15	06 08 / 05	96 98 / 95	13 23 31 / 14 24 32	08 / 05	98 / 95	13 23 31 / 14 24 32	96 98 / 95 95		41 / 42	13 23 31 / 14 24 32	53 / 54
Tripped on short-circuit		13 23 31 / 14 24 32	16 18 / 15	06 08 / 05	96 98 / 95	13 23 31 / 14 24 32	08 / 05	98 / 95	13 23 31 / 14 24 32	96 98 / 95 95		41 / 42	13 23 31 / 14 24 32	53 / 54
Off after short-circuit		13 23 31 / 14 24 32	16 18 / 15	06 08 / 05	96 98 / 95	13 23 31 / 14 24 32	08 / 05	98 / 95	13 23 31 / 14 24 32	96 98 / 95 95		41 / 42	13 23 31 / 14 24 32	53 / 54
Manual reset		13 23 31 / 14 24 32	16 18 / 15	06 08 / 05	96 98 / 95	13 23 31 / 14 24 32	08 / 05	98 / 95	13 23 31 / 14 24 32	96 98 / 95 95		41 / 42	13 23 31 / 14 24 32	53 / 54

Motor starters - open version

Reversing contactor breakers Integral 63

Auxiliary contact states according to the positions of the control knob

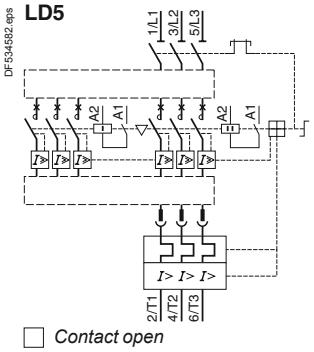

Contact open

Contact closed

DF534583.eps

DF536039.eps

DF536038.eps

Auxiliary contact actuators												
	Auto + 0									ou		
Auxiliary contacts												
LA1 LC010				**LA1 LC012**			**LA1 LC025**		**LA1 LC020**	**LA1 LC001**	**LA1 LC021**	**LA1 LC031**
13 23 31 14 24 32	16 18 15	06 05	96 98 95	13 23 31 14 24 32	08 05	98 95	13 23 31 14 24 32	96 98 95 95	13 23 31 14 24 32	41 42	13 23 31 14 24 32	53 63 54 64
Off + control test function												
13 23 31 14 24 32	16 18 15	06 05	96 98 95	13 23 31 14 24 32	08 05	98 95	13 23 31 14 24 32	96 98 95 95	13 23 31 14 24 32	41 42	13 23 31 14 24 32	53 63 54 64
Off												
13 23 31 14 24 32	16 18 15	06 05	96 98 95	13 23 31 14 24 32	08 05	98 95	13 23 31 14 24 32	96 98 95 95	13 23 31 14 24 32	41 42	13 23 31 14 24 32	53 63 54 64
On, reversing contactor open												
13 23 31 14 24 32	16 18 15	06 05	96 98 95	13 23 31 14 24 32	08 05	98 95	13 23 31 14 24 32	96 98 95 95	13 23 31 14 24 32	41 42	13 23 31 14 24 32	53 63 54 64
On, closed												
13 23 31 14 24 32	16 18 15	06 05	96 98 95	13 23 31 14 24 32	08 05	98 95	13 23 31 14 24 32	96 98 95 95	13 23 31 14 24 32	41 42	13 23 31 14 24 32	53 63 54 64
On, closed												
13 23 31 14 24 32	16 18 15	06 05	96 98 95	13 23 31 14 24 32	08 05	98 95	13 23 31 14 24 32	96 98 95 95	13 23 31 14 24 32	41 42	13 23 31 14 24 32	53 63 54 64
Tripped on overload												
13 23 31 14 24 32	16 18 15	06 05	96 98 95	13 23 31 14 24 32	08 05	98 95	13 23 31 14 24 32	96 98 95 95	13 23 31 14 24 32	41 42	13 23 31 14 24 32	53 63 54 64
Off after overload												
13 23 31 14 24 32	16 18 15	06 05	96 98 95	13 23 31 14 24 32	08 05	98 95	13 23 31 14 24 32	96 98 95 95	13 23 31 14 24 32	41 42	13 23 31 14 24 32	53 63 54 64
Tripped on short-circuit												
13 23 31 14 24 32	16 18 15	06 05	96 98 95	13 23 31 14 24 32	08 05	98 95	13 23 31 14 24 32	96 98 95 95	13 23 31 14 24 32	41 42	13 23 31 14 24 32	53 63 54 64
Off after short-circuit												
13 23 31 14 24 32	16 18 15	06 05	96 98 95	13 23 31 14 24 32	08 05	98 95	13 23 31 14 24 32	96 98 95 95	13 23 31 14 24 32	41 42	13 23 31 14 24 32	53 63 54 64
Manual reset												
13 23 31 14 24 32	16 18 15	06 08 05	96 98 95	13 23 31 14 24 32	08 05	98 95	13 23 31 14 24 32	96 98 95 95	13 23 31 14 24 32	41 42	13 23 31 14 24 32	53 63 54 64

Motor starters - open version
Integral 63 contactor breakers and reversing contactor breakers

Integral 63

Contactor breakers Integral 63

Control circuit: a.c.

LD● LD●30 + LB● LD03

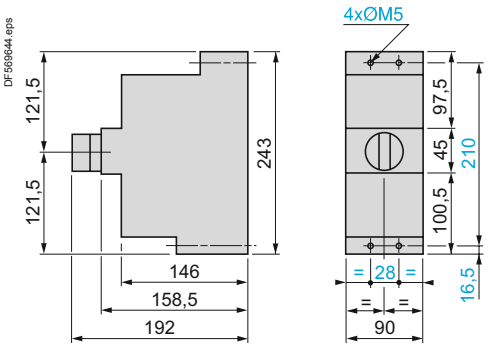

Control circuit: d.c.

LD● LD●30 + LB● LD03 + LA1 LD080

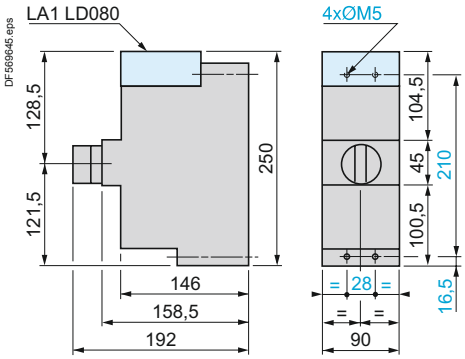

Reversing contactor breakers Integral 63

LD5 LD●30 + LB● LD03M

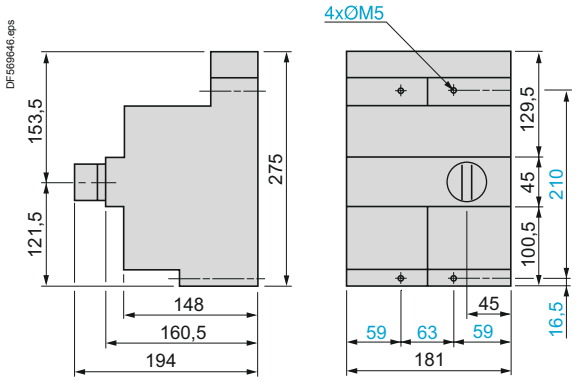

Current limiter

LA9 LB920

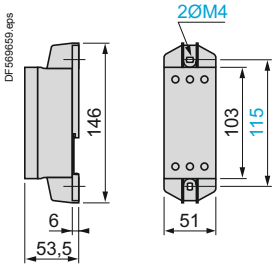

Add-on blocks

For mounting on contactor breakers Integral 63

LA1 LC012
LA1 LC001

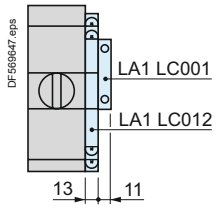

LA1 LC010
LA1 LC07●

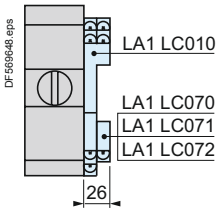

LA1 LC052

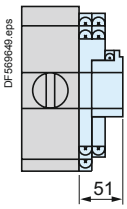

LA1 LC020

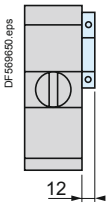

LA1 LC030
(1 ou 2)

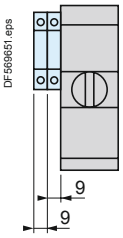

LA1 LC025
LA LC001

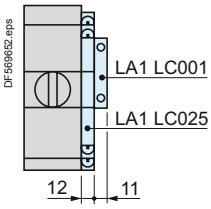

For mounting on reversing contactor breakers Integral 63

LA1 LC021, LC025
LA1 LC001

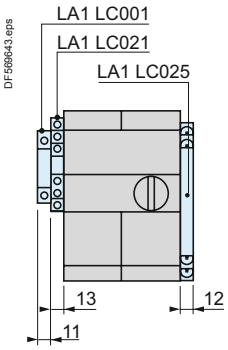

LA1 LC031

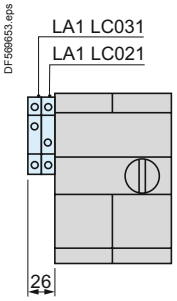

LA1 LC012
LA1 LC001

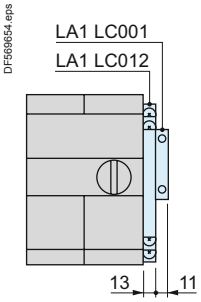

LA1 LC010
LA1 LC07●●

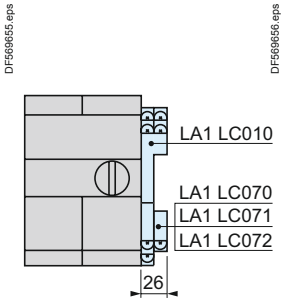

LA1 LC052●

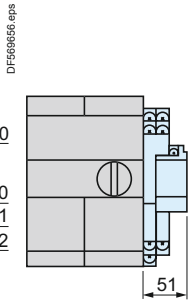

LA1 LC020

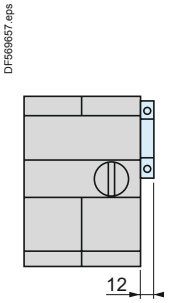

Motor starters - open version
Integral 63 contactor breakers and reversing contactor breakers

Integral 63

Mounting

On 75 mm ⊔ rail, with mounting plate LA9 LD010

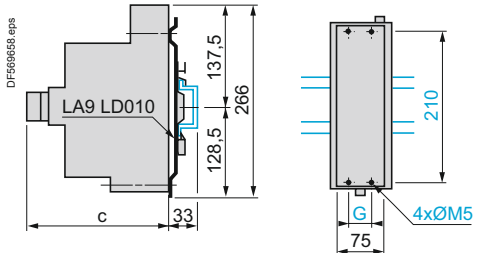

	a	b	c	G
LD1	266	137,5	192	28
LD4	266	137,5	192	28
LD5	282	153,5	194	63

On 32 mm ⊏ rails, at 220 mm centres

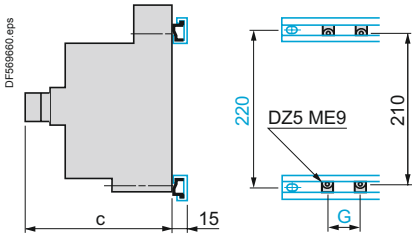

	c	G
LD1	192	28
LD4	192	28
LD5	194	63

On pre-slotted mounting plate AM1 P

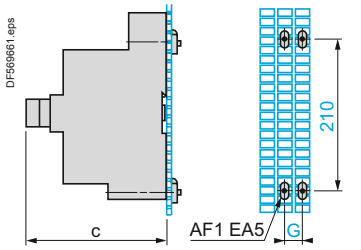

	c	G
LD1	192	28
LD4	192	28
LD5	194	63

With mounting plate LA9 LD010

SOn 32 mm ⊏ rails, at 120 mm centres

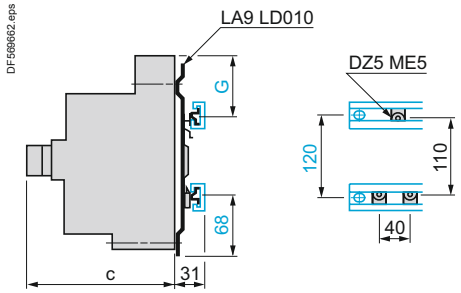

	c	G
LD1	192	78
LD4	192	78
LD5	194	94

Flush mounting (contactor breakers and reversing contactor breakers)

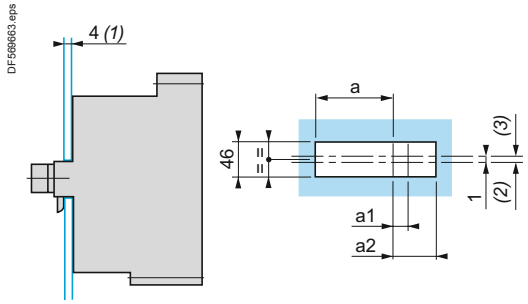

	a	a1	a2
LD1 LD030	90	–	–
LD4 LD•30	90	–	–
LD5 LD•30	181	–	–
LA1 LC010	–	13	–
LA1 LC012	–	13	–
LA1 LC010 + LA1 LC052•	–	–	51
LA1 LC012 + LA1 LC052•	–	–	51

Minimum electrical clearance

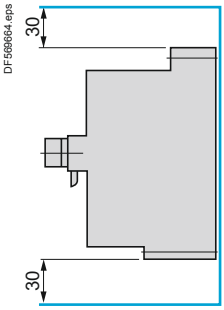

(1) Maximum door thickness for interlocking by LD4 and LD5.
(2) Centre of operating handle.
(3) Fixing centre.

Adjustable door interlock mechanisms LA9 LC33• and LA9 LC53•

For mounting on LD4 LD•30 and LD5 LD•30

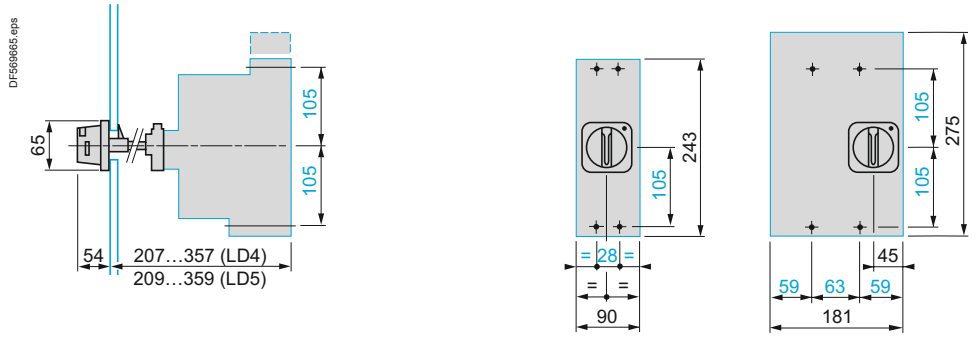

Door drillings

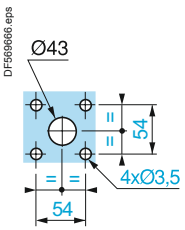

Integral 63

Motor starters - open version
Integral 63 contactor breakers and reversing contactor breakers

Integral 63

Contactor breakers Integral 63 with protection module LB●

LD1 LD030 + LB1 LD03●

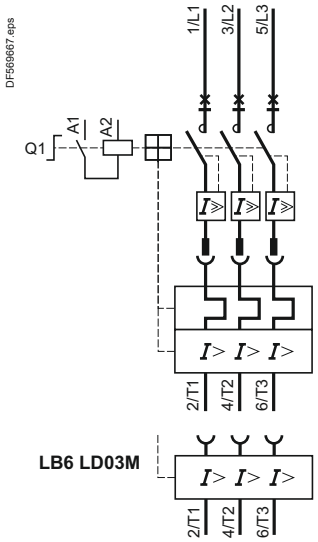

LD4 LD●30 + LB1 LD03●

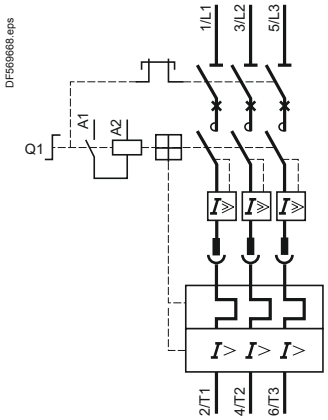

Reversing contactor breakers Integral 63 with protection module LB●

LD5 LD●30 + LB1 LD03M ou LD03P

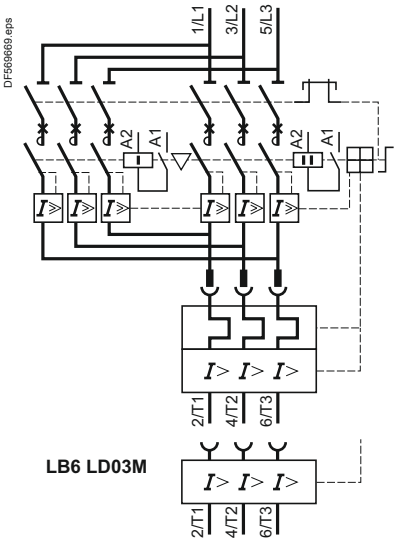

Add-on blocks

For contactor breakers LD4

Mounted on LH side

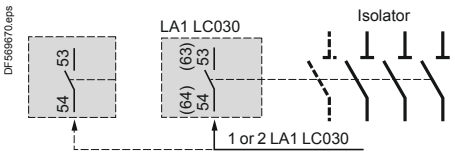

For reversing contactor breakers LD5

Mounted on LH side

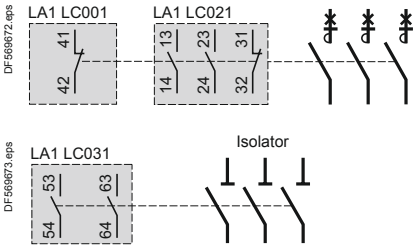

For contactor breakers LD1 or LD4 and reversing contactor breakers LD5

Mounted on RH side

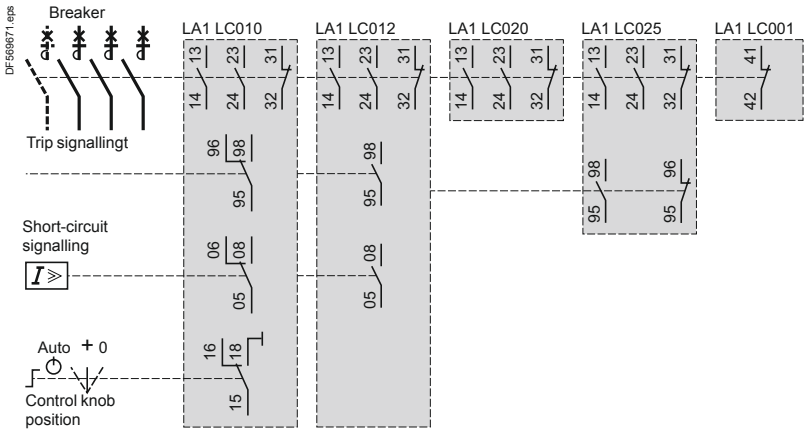

General: pages A5/16 to A5/21
References: pages A5/2 to A5/13
Dimensions: pages A5/38 and A5/39

Motor starters - open version
Integral 63 contactor breakers and reversing contactor breakers

Integral 63

Tripping devices (1) for LD1, LD4, LD5

LA1 LC071

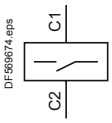

LA1 LC070, LC072

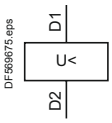

Remote electrical reset devices (1) for LD1 to LD5

LA1 LC052●

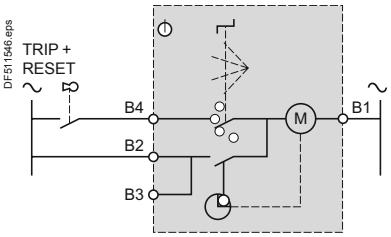

The use of instantaneous auxiliary contact block LA1 LC020 prevents the use of tripping devices or electrical reset devices

(1) For contactor breakers and reversing contactor breakers already fitted with an LA1 LC010 or LA1 LC012 instantaneous auxiliary contact block.

Interface modules

LA1 LD180

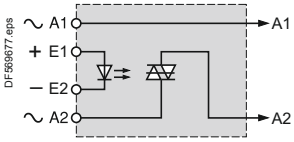

LA1 LD580

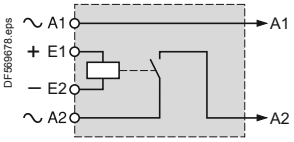

Voltage converter LA1 LD080 (supply with contactor breakers for ⎓ control circuit operation)

Switching by control contact

24 or 48 V

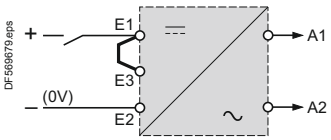

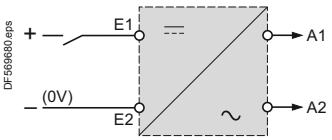

Switching by "Low level" input

24 or 48 V

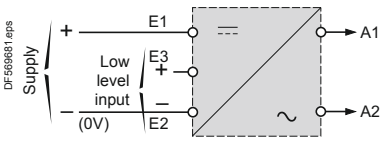

General:
pages A5/16 to A5/21

References:
pages A5/2 to A5/13

Dimensions:
pages A5/38 and A5/39

Complementary technical information: coordination and standards

Coordination between protection and control components

Type of information	Page
Types of coordination, according to the standard currents in the circuit to be considered	A6/2
Selection of the coordination type	A6/3

Suggested coordinated Direct-On-Line motor starter combinations

Fuse + contactors + thermal overload relay	A6/4
Circuit breaker (with built in overload protection) + contactors	A6/9
Circuit breaker + contactors + thermal overload relay	A6/11

Suggested coordinated Star-delta motor starter combinations

Fuse + contactors + thermal overload relay	A6/15
Circuit breaker (with built in overload protection) + contactors	A6/18
Circuit breaker + contactors + thermal overload relay	A6/20

Contactors: Utilisation categories – Standard characteristics – Selection tables per categorie

Definition: utilisation categories : AC-1, AC-2, AC-3	A6/22
Definition: contactor standard characteristics	A6/23
Contactor selection tables per utilisation categorie	A6/24

Contactors for specific application – Design information

Selection of contactors for lighting circuits	A6/38
Selection of contactors for heating circuits	A6/44
Selection of contactors for switching primaries of 3P LV/LV transformers	A6/46
Selection of contactors for switching 3P capacitor banks (factor correction)	A6/47
Selection of contactors auto-transformer starting	A6/48
Selection of contactors for rotor circuit of slip-ring motors	A6/50
Design of long distance remote control for contactors	A6/52
Current of asynchronous squirrel cage motors at nominal load	A6/56

Standards – Protection against contact – Protective treatments

International standards and certifications	A6/57
Protective product treatments, according environment or climate	A6/59
Protection against accidental direct contacts / IP codes	A6/61

TeSys motor starters
Levels of service

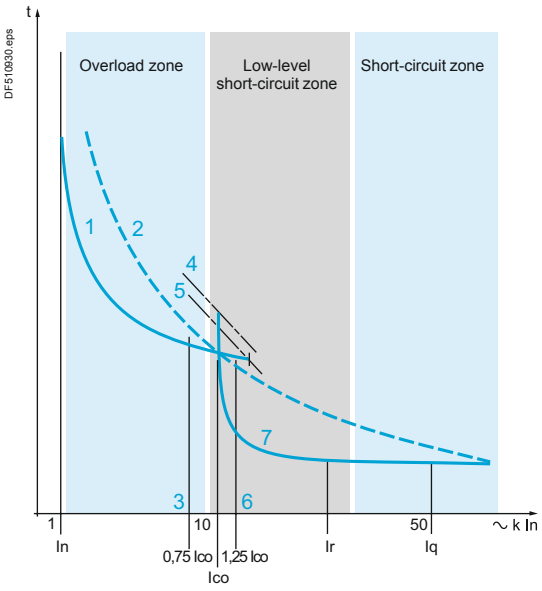

1 Thermal overload relay curve.
2 Fuse.
3 Tripping of thermal overload relay only.
4 Thermal limit of the circuit breaker.
5 Thermal overload relay limit.
6 Current broken by the SCPD (1).
7 Circuit breaker magnetic trip.

Type 1 and type 2 coordination according to the standard

The standard defines tests at different levels of current; the purpose of these tests is to place the equipment in extreme conditions.
The standard defines 2 types of coordination, according to the condition of the components after testing:
type 1,
type 2.
To determine the type of coordination, the standard requires that the behaviour of the equipment be tested under overload and short-circuit conditions for 3 fault current values, covering overload and short-circuit conditions.

Type 1 coordination

Type 1 coordination requires that in a short-circuit condition, the contactor or starter must not present any danger to personnel or installations and must not be able to resume operation without repair or the replacement of parts.

Type 2 coordination

Type 2 coordination requires that In a short-circuit condition, the contactor or starter must not present any danger to personnel or installations and must subsequently be able to resume operation. The risk of contact welding is permissible; in this case, the manufacturer must indicate measures to be taken regarding maintenance of the equipment.

Type 2 coordination increases reliability of operation.

Current values

Current “Ico” (overload I < 10 In)

The thermal overload relay associated with the contactor provides protection against this type of fault, up to a value Ico (see curve) defined by the manufacturer.

Standard IEC 60947-4-1 specifies the 2 current values to be used for checking coordination between the thermal overload relay and the short-circuit protection device:
- at 0.75 Ico only the thermal overload relay must trip,
- at 1.25 Ico the short-circuit protection device must operate.

Current “r” (low level short-circuit 10 < I < 50 In)

The main cause of this type of fault is the deterioration of insulating materials. Standard IEC 60947-4-1 defines an intermediate short-circuit current “r”. This test current makes it possible to check whether the protection device is providing protection against low-level short-circuits.

Operational current Ie (AC-3) (A)	**Current “r”** (kA)
Ie ⩽ 16	1
16 < Ie ⩽ 63	3
63 < Ie ⩽ 125	5
125 < Ie ⩽ 315	10
315 < Ie ⩽ 630	18
630 < Ie ⩽ 1000	30

Current “Iq” (short-circuit > current “r”)

This type of fault corresponds to a dead short and is relatively rare. It can be caused by a connection error during maintenance work. Short-circuit protection is provided by fast operating devices.

Standard IEC 60947-4-1 defines a current “Iq”. The coordination tables supplied by Schneider Electric are based on a current “Iq” that is generally ⩾ 50 kA.

(1) SCPD: short-circuit protection device.

TeSys motor starters
Levels of service

Selection

No coordination

Considerable risks to both persons and equipment.

Not authorised by standards:
□ NF C 15-100 and IEC 60364-1, article 133-1
(installation regulations),
□ EN/IEC 60204-1, article 7
(electrical equipment in machines),
□ IEC 60947-4-1, article 8.2.5. (starters)

Type 1 coordination

The most frequently used solution.

■ Equipment costs are lower.
■ Reliability of operation is not a requirement.
■ Before restarting, it may be necessary to repair the motor starter.

Consequences:
□ significant amount of machine downtime,
□ skilled maintenance personnel required to repair, check, obtain supplies.

Example: air conditioning in commercial premises.

Type 2 coordination

This solution ensures reliability of operation.

Consequences:
□ reduced machine downtime,
□ reduced maintenance after a short-circuit.

Example: escalators.

Total coordination

With this solution, no damage or misadjustment is permissible and reliability of operation is guaranteed.

Consequences:
□ immediate return to service,
□ no special precautions required.

Examples: smoke extraction, fire-fighting pumps.

TeSys motor starters - open version

D.O.L starters with fuse protection (NF C or DIN fuses, type aM)

0.06 to 55 kW at 400/415 V: type 1 coordination

Standard power ratings of 3-phase motors 50/60 Hz in category AC-3						Fuse carrier [1] (basic block)	aM fuses		Contactor	Thermal overload relay class 10	
400/415 V		440 V		500 V		Reference	Size	Rating	Reference [2]	Reference	Setting range
P	Ie	P	Ie	P	Ie						
kW	A	kW	A	kW	A			A			A
0.06	0.2	**0.06**	0.19	**–**	–	**LS1D32**	10 x 38	2	**LC1K06**	**LR2K0302**	0.16…0.23
–	–	**0.09**	0.28	**–**	–	**LS1D32**	10 x 38	2	**LC1K06**	**LR2K0303**	0.23…0.36
0.09	0.3	**–**	–	**–**	–						
0.12	0.44	**0.12**	0.37	**–**	–	**LS1D32**	10 x 38	2	**LC1K06**	**LR2K0304**	0.36…0.54
0.18	0.6	**0.18**	0.55	**–**	–						
–	–	**0.25**	0.76	**–**	–	**LS1D32**	10 x 38	2	**LC1K06**	**LR2K0305**	0.54…0.8
0.25	0.85	**–**	–	**–**	–						
0.37	1.1	**0.37**	1	**0.37**	0.88	**LS1D32**	10 x 38	2	**LC1K06**	**LR2K0306**	0.8…1.2
0.55	1.5	**0.55**	1.36	**0.55**	1.2						
–	–	**0.75**	1.68	**0.75**	1.5	**LS1D32**	10 x 38	2	**LC1K06**	**LR2K0307**	1.2…1.8
0.75	1.9	**–**	–	**1.1**	2.2						
1.1	2.7	**1.1**	2.37	**1.5**	2.9	**LS1D32**	10 x 38	4	**LC1K06**	**LR2K0308**	1.8…2.6
1.5	3.6	**1.5**	3.06	**–**	–	**LS1D32**	10 x 38	4	**LC1K06**	**LR2K0310**	2.6…3.7
2.2	4.9	**–**	–	**2.2**	3.9						
–	–	**–**	–	**3**	5.2	**LS1D32**	10 x 38	6	**LC1K06**	**LR2K0312**	3.7…5.5
–	–	**2.2**	4.42	**–**	–	**LS1D32**	10 x 38	8	**LC1K06**	**LR2K0312**	3.7…5.5
3	6.5	**3**	5.77	**4**	6.8	**LS1D32**	10 x 38	8	**LC1K09**	**LR2K0314**	5.5…8
4	8.5	**4**	7.9	**5.5**	9.2	**LS1D32**	10 x 38	12	**LC1K09**	**LR2K0316**	8…11.5

(1) For breaking under load, add a rotary switch-disconnector.
(2) For reversing operation, replace the prefix LC1 with LC2.

TeSys motor starters - open version

D.O.L starters with fuse protection (NF C or DIN fuses, type aM)

0.06 to 55 kW at 400/415 V: type 1 coordination

Standard power ratings of 3-phase motors 50/60 Hz in category AC-3						Fuse carrier [1] (basic block)	aM fuses		Contactor	Thermal overload relay classe 10	
400/415 V		440 V		500 V		Reference	Size	Rating	Reference [2]	Reference	Setting range
P	Ie	P	Ie	P	Ie						
kW	A	kW	A	kW	A			A			A
5.5	11.5	**5.5**	10.4	**7.5**	12.4	**LS1D32**	10 x 38	16	**LC1K12**	**LR2K0321**	10…14
7.5	15.5	**7.5**	13.7	**9**	13.9	**LS1D32**	10 x 38	16	**LC1D18**	**LRD21**	12…18
–	–	**9**	16.9	**–**	–	**LS1D32**	10 x 38	20	**LC1D25**	**LRD21**	12…18
9	18.1	**–**	–	**11**	17.6						
11	22	**11**	20.1	**15**	23	**GK1EK**	14 x 51	25	**LC1D25**	**LRD22**	16…24
15	29	**15**	26.5	**18.5**	28	**GK1EK**	14 x 51	32	**LC1D32**	**LRD32**	23…32
18.5	35	**18.5**	32.8	**22**	33	**GK1EK**	14 x 51	40	**LC1D40**	**LRD3355**	30…40
22	41	**22**	39	**30**	44	**GS●J**	22 x 58	50	**LC1D50A**	**LRD350**	37…50
–	–	**30**	51.5	**–**	–	**GS●J**	22 x 58	80	**LC1D50A**	**LRD365**	48…65
–	–	**–**	–	**37**	53	**GS●J**	22 x 58	80	**LC1D65A**	**LRD365**	48…65
30	55	**37**	64	**–**	–	**GS●J**	22 x 58	80	**LC1D65A**	**LRD365**	48…65
–	–	**–**	–	**45**	64	**GS●J**	22 x 58	80	**LC1D80**	**LRD3361**	55…70
37 [3]	66	**45**	76	**–**	–	**GS●J**	22 x 58	100	**LC1D80**	**LRD3363**	63…80
45	80	**–**	–	**55**	78	**GS●J**	22 x 58	100	**LC1D95**	**LRD3365**	80…93
–	–	**55**	90	**–**	–	**GS●J**	22 x 58	125	**LC1D115**	**LRD4365**	80…104
55	97	**–**	–	**75**	106	**GS●J**	22 x 58	125	**LC1D115**	**LRD4367**	95…120

(1) For breaking under load, add a rotary switch-disconnector.
(2) For reversing operation, replace the prefix LC1 with LC2.
(3) 400 V maximum.

TeSys motor starters - open version

D.O.L starters with fuse protection (NF C or DIN fuses, type aM)

0.06 to 315 kW at 400/415 V: type 2 coordination

Standard power ratings of 3-phase motors 50/60 Hz in category AC-3						Switch-disconnector	aM fuses		Contactor	Thermal overload relay classe 10	
400/415 V		440 V		500 V		Reference (1)	Size	Rating	Reference (2)	Reference	Setting range
P	Ie	P	Ie	P	Ie						
kW	A	kW	A	kW	A			A			A
0.06	0.2	0.06	0.19	–	–	GS1DD	10 x 38	2	LC1D09	LRD02	0.16…0.25
–	–	0.09	0.28	–	–	GS1DD	10 x 38	2	LC1D09	LRD03	0.25…0.4
0.09 0.12	0.3 0.44	– 0.12	– 0.37	– –	– –	GS1DD	10 x 38	2	LC1D09	LRD04	0.4…0.63
0.18 –	0.6 –	0.18 0.25	0.55 0.76	– –	– –	GS1DD	10 x 38	2	LC1D09	LRD05	0.63…1
0.25 0.37 0.55	0.85 1.1 1.5	– 0.37 0.55	– 1 1.36	0.37 0.55 0.75	0.88 1.2 1.5	GS1DD	10 x 38	2	LC1D09	LRD06	1…1.7
0.75 –	1.9 –	0.75 1.1	1.68 2.37	– 1.1	– 2.2	GS1DD	10 x 38	4	LC1D09	LRD07	1.6…2.5
1.1 1.5	2.7 3.6	– 1.5	– 3.06	1.5 2.2	2.9 3.9	GS1DD	10 x 38	4	LC1D09	LRD08	2.5…4
2.2	4.9	2.2	4.42	3	5.2	GS1DD	10 x 38	6	LC1D09	LRD10	4…6
3	6.5	3	5.77	4	6.8	GS1DD	10 x 38	8	LC1D09	LRD12	5.5…8
4	8.5	4	7.9	5.5	9.2	GS1DD	10 x 38	10	LC1D09	LRD14	7…10
5.5	11.5	5.5	10.4	7.5	12.4	GS1DD	10 x 38	16	LC1D12	LRD16	9…13
7.5	15.5	7.5	13.7	9	13.9	GS1DD	10 x 38	16	LC1D18	LRD21	12…18
–	–	9	16.9	–	–	GS●F	14 x 51	20	LC1D25	LRD21	12…18
9 11	18.1 22	11 –	20.1 –	11 15	17.6 23	GS●F	14 x 51	25	LC1D25	LRD22	16…24
15	29	15	26.5	18.5	28	GS●F	14 x 51	32	LC1D32	LRD32	23…32
18.5	35	18.5	32.8	22	33	GS●F	14 x 51	40	LC1D40A	LRD340	30…40
22	41	22	39	30	44	GS●J	22 x 58	50	LC1D50A	LRD350	37…50
–	–	30	51.5	–	–	GS●J	22 x 58	80	LC1D65A	LRD365	48…65
–	–	–	–	37	53	GS●J	22 x 58	80	LC1D65A	LRD365	48…65
30	55	37	64	–	–	GS●J	22 x 58	80	LC1D65A	LRD365	48…65
–	–	–	–	45	64	GS●J	22 x 58	80	LC1D95	LRD3361	55…70
37	66	45	76	–	–	GS●J	22 x 58	100	LC1D80	LRD3363	63…80
–	–	–	–	55	78	GS●J	22 x 58	100	LC1D115	LR9D5367	60…100
45	80	–	–	–	–	GS●J	22 x 58	100	LC1D95	LRD3365	80…93
55	97	55	90	75	106	GS●L	T0	125	LC1D150	LR9D5369	90…150
75	132	75	125	90	128	GS●L	T0	160	LC1D150	LR9D5369	90…150
90	160	90	146	110	156	GS●N	T1	200	LC1F185	LR9F5371	132…220
110	195	110	178	132	184	GS●N	T1	250	LC1F225	LR9F5371	132…220
132	230	132	215	160	224	GS●QQ	T2	315	LC1F265	LR9F7375	200…330
–	–	160	256	–	–	GS●QQ	T2	315	LC1F330	LR9F7375	200…330
160	280	200	321	200	280	GS●QQ	T2	400	LC1F330	LR9F7375	200…330
–	–	–	–	220	310	GS●QQ	T2	400	LC1F400	LR9F7375	200…330
200 220	350 388	– 220	– 353	– 250	– 344	GS2S	T3	500	LC1F400	LR9F7379	300…500
250	430	250	401	–	–	GS2S	T3	500	LC1F500	LR9F7379	300…500
– –	– –	– –	– –	315 355	432 488	GS2S	T3	630	LC1F500	LR9F7381	380…630
315	540	315	505	–	–	GS2S	T3	630	LC1F630	LR9F7381	380…630
– –	– –	355 400	549 611	– 400	– 552	GS2V	T4	800	LC1F630	LR9F7381	380…630

(1) GS●: GS1 for direct operator or GS2 for external operator.
(2) For reversing operation, replace the prefix LC1 with LC2.

TeSys motor starters - open version

D.O.L starters with fuse protection (NF C or DIN fuses, type aM)

0.75 to 400 kW at 690 V: type 2 coordination

Standard power ratings of 3-phase motors 50/60 Hz in category AC-3		Switch-disconnector	aM fuses		Contactor	Thermal overload relay classe 10	
P	Ie	Reference (1)	Size	Rating	Reference (2)	Reference	Setting range
kW	A			A			A
0.75	1.1	**GS●F**	14 x 51	2	**LC1D09**	**LRD06**	1…1.6
1.1	1.6	**GS●F**	14 x 51	2	**LC1D09**	**LRD06**	1…1.6
1.5	2.1	**GS●F**	14 x 51	4	**LC1D09**	**LRD07**	1.6…2.5
2.2	2.8	**GS●F**	14 x 51	4	**LC1D09**	**LRD08**	2.5…4
3	3.8	**GS●F**	14 x 51	6	**LC1D09**	**LRD08**	2.5…4
4	4.9	**GS●F**	14 x 51	6	**LC1D09**	**LRD10**	4…6
5.5	6.7	**GS●F**	14 x 51	8	**LC1D09**	**LRD12**	5.5…8
7.5	8.9	**GS●F**	14 x 51	10	**LC1D25**	**LRD16**	9…13
11	12.8	**GS●F**	14 x 51	16	**LC1D25**	**LRD16**	9…13
15	17	**GS●F**	14 x 51	20	**LC1D25**	**LRD22**	16…24
18.5	21	**GS●F**	14 x 51	25	**LC1D32**	**LRD22**	16…24
22	24	**GS●J**	22 x 58	32	**LC1D40A**	**LRD332**	23…32
30	32	**GS●J**	22 x 58	40	**LC1D40A**	**LRD340**	30…40
37	39	**GS●J**	22 x 58	50	**LC1D65A**	**LRD350**	37…50
45	47	**GS●J**	22 x 58	63	**LC1D80**	**LR2D3357**	37…50
55	57	**GS●J**	22 x 58	80	**LC1D115**	**LR2D3359**	48…65
75	77	**GS●KK**	T00	100	**LC1D115**	**LR2D3363**	63…80
90	93	**GS●KK**	T00	125	**LC1D150**	**LR9D5369**	90…150
110	113	**GS●KK**	T00	125	**LC1F185**	**LR9D5369**	90…150
132	134	**GS●L**	T0	160	**LC1F265**	**LR9F5371**	132…220
160	162	**GS●N**	T1	200	**LC1F265**	**LR9F5371**	132…220
200	203	**GS●N**	T1	250	**LC1F330**	**LR9F7375**	200…330
220	224	**GS●QQ**	T2	250	**LC1F400**	**LR9F7375**	200…330
250	250	**GS●QQ**	T2	315	**LC1F400**	**LR9F7375**	200…330
315	313	**GS●QQ**	T2	355	**LC1F500**	**LR9F7379**	300…500
355	354	**GS●QQ**	T2	400	**LC1F630**	**LR9F7379**	300…500
400	400	**GS2S**	T3	500	**LC1F630**	**LR9F7379**	300…500

(1) GS●: GS1 for direct operator or GS2 for external operator.
(2) For reversing operation, replace the prefix LC1 with LC2.

TeSys motor starters - open version

D.O.L. starters with fuse protection (BS fuses)

0.06 to 375 kW at 415 V: type 2 coordination

Standard power ratings of 3-phase motors 50/60 Hz in category AC-3						Switch-disconnector-fuse	BS fuses		Contactor	Thermal overload relay	
415 V		440 V		500 V		Reference	Size	Rating	Reference (1)	Reference	Setting range
P	Ie	P	Ie	P	Ie						
kW	A	kW	A	A	kA			A			A
0.06	0.22	0.06	0.19	–	–	**GS1DDB**	A1	NIT 2	**LC1D09**	**LRD02**	0.16…0.25
–	–	0.09	0.28	–	–	**GS1DDB**	A1	NIT 2	**LC1D09**	**LRD03**	0.25…0.4
0.09	0.36	–	–	–	–						
0.12	0.42	0.12	0.37	–	–	**GS1DDB**	A1	NIT 2	**LC1D09**	**LRD04**	0.4…0.63
0.18	0.6	0.18	0.55	–	–	**GS1DDB**	A1	NIT 2	**LC1D09**	**LRD05**	0.63…1
–	–	0.25	0.76	–	–	**GS1DDB**	A1	NIT 4	**LC1D09**	**LRD05**	0.63…1
0.25	0.88	0.37	1	**0.37**	1						
0.37	1	0.55	1.36	**0.55**	1.2						
0.55	1.5	0.75	1.68	**0.75**	1.5	**GS1DDB**	A1	NIT 6	**LC1D09**	**LRD06**	1…1.7
0.75	2	–	–	–	–	**GS1DDB**	A1	NIT 10	**LC1D09**	**LRD07**	1.6…2.5
–	–	–	–	**1.5**	2.6	**GS1DDB**	A1	NIT 10	**LC1D09**	**LRD08**	2.5…4
1.5	3.5	1.5	3.06	**2.2**	3.8	**GS1DDB**	A1	NIT 16	**LC1D09**	**LRD08**	2.5…4
2.2	5	2.2	4.42	**3**	5	**GS1DDB**	A1	NIT 16	**LC1D09**	**LRD10**	4…6
3	6.5	3	5.77	**4**	6.5	**GS1DDB**	A1	NIT 20	**LC1D09**	**LRD12**	5.5…8
4	8.4	4	7.9	**5.5**	9	**GS1DDB**	A1	NIT 20	**LC1D09**	**LRD14**	7…10
5.5	11	5.5	10.4	**7.5**	12	**GS1DDB**	A1	NIT 20M25	**LC1D12**	**LRD16**	9…13
7.5	14	7.5	13.7	**9**	13.9	**GS1DDB**	A1	NIT 20M32	**LC1D18**	**LRD21**	12…18
9	18.1	9	16.9	–	–	**GS2GB**	A2	TIA 32M35	**LC1D18**	**LRD21**	12…18
11	21	11	20	**11**	18.4						
–	–	–	–	**15**	23	**GS2GB**	A2	TIA 32M50	**LC1D25**	**LRD22**	16…24
15	28.5	15	26.5	–	–	**GS2GB**	A2	TIA 32M63	**LC1D32**	**LRD32**	23…32
–	–	–	–	**22**	33	**GS2GB**	A3	TIS 63M80	**LC1D40**	**LRD3355**	30…40
22	42	22	39	**30**	45	**GS2GB**	A3	TIS 63M100	**LC1D50**	**LRD3357**	37…50
–	–	30	51.5	–	–	**GS2GB**	A3	TIS 63M100	**LC1D50**	**LRD3359**	48…65
30	57	–	–	–	–	**GS2GB**	A3	TIS 63M100	**LC1D65**	**LRD3359**	48…65
–	–	45	76	**45**	65	**GS2LLB**	A4	TCP 100M125	**LC1D80**	**LRD3363**	63…80
45	81	–	–	**55**	80	**GS2LLB**	A4	TCP 100M125	**LC1D95**	**LRD3365**	80…93
55	100	–	–	–	–	**GS2LLB**	A4	TCP 100M160	**LC1D115**	**LR9D5369**	90…150
–	–	55	90	–	–	**GS2LLB**	A4	TCP 100M160	**LC1D115**	**LR9D5367**	60…100
–	–	–	–	**80**	116	**GS2LB**	B2	TF 200	**LC1D150**	**LR9D5369**	90…150
80	138	80	132	–	–	**GS2LB**	B2	TF 200M250	**LC1D150**	**LR9D5369**	90…150
–	–	–	–	**100**	143						
–	–	–	–	**110**	156	**GS2LB**	B2	TF 200M250	**LC1F185**	**LR9F5371**	132…220
100	182	100	162	–	–	**GS2MMB**	B2	TF 200M250	**LC1F185**	**LR9F5371**	132…220
110	196	110	178	–	–	**GS2MMB**	B2	TF 200M315	**LC1F225**	**LR9F5371**	132…220
–	–	–	–	**140**	200	**GS2NB**	B3	TKF 315M355	**LC1F265**	**LR9F5371**	132…220
140	250	140	226	**160**	220	**GS2NB**	B3	TKF 315M355	**LC1F265**	**LR9F7375**	200…330
160	285	160	256	–	–	**GS2QQB**	B4	TKF 315M355	**LC1F330**	**LR9F7375**	200…330
–	–	–	–	**220**	310	**GS2QQB**	B4	TMF 400	**LC1F400**	**LR9F7379**	300…500
220	388	220	353	**257**	362	**GS2QQB**	B4	TMF 400M450	**LC1F400**	**LR9F7379**	300…500
–	–	–	–	**270**	380	**GS2SB**	C2	TTM 500	**LC1F500**	**LR9F7379**	300…500
257	450	257	412	–	–						
270	460	270	433	–	–	**GS2SB**	C2	TTM 500	**LC1F500**	**LR9F7381**	380…630
375	610	375	577	**375**	508						
–	–	–	–	**425**	556	**GS2SB**	C2	TTM 630	**LC1F630**	**LR9F7381**	380…630

(1) For reversing operation, replace the prefix LC1 with LC2.

TeSys motor starters - open version

D.O.L. starters with circuit breaker and overload protection built into the circuit breaker

0.06 to 110 kW at 400/415 V: type 1 coordination

Standard power ratings of 3-phase motors 50/60 Hz in category AC-3									Circuit breaker		Contactor
	400/415 V			440 V			500 V				
	P	Ie	Iq (1)	P	Ie	Iq (1)	P	Ie	Iq (1)	Reference	Setting range of thermal trips	Reference (2)
	kW	A	kA	kW	A	kA	kW	A	kA		A	
	0.06	0.2	50	**0.06**	0.19	50	–	–	–	**GV2ME02**	0.16…0.25	**LC1K06** or **LC1D09**
	0.09	0.3	50	**0.09**	0.28	50	–	–	–	**GV2ME03**	0.25…0.40	**LC1K06** or **LC1D09**
				0.12	0.37	50						
	0.12	0.44	50	–	–	–	–	–	–	**GV2ME04**	0.40…0.63	**LC1K06** or **LC1D09**
	0.18	0.6	50	**0.18**	0.55	50	–	–	–			
	0.25	0.85	50	**0.25**	0.76	50				**GV2ME05**	0.63…1	**LC1K06** or **LC1D09**
	0.37	1.1	50	**0.37**	0.99	50						
	–	–	–	–	–	–	**0.37**	0.88	50	**GV2ME06**	1…1.6	**LC1K06** or **LC1D09**
	0.55	1.5	50	**0.55**	1.36	50	**0.55**	1.2	50			
	–	–	–	–	–	–	**0.75**	1.5	50	**GV2ME06**	1…1.6	**LC1K06** or **LC1D09**
	0.75	1.9	50	**0.75**	1.68	50	–	–	–	**GV2ME07**	1.6….2.5	**LC1K06** or **LC1D09**
	–	–	–	**1.1**	2.37	50	**1.1**	2.2	50			
	1.1	2.7	50	–	–	–	**1.5**	2.9	50	**GV2ME08**	2.5…4	**LC1K06** or **LC1D09**
	1.5	3.6	50	**1.5**	3.06	50	**2.2**	3.9	50			
	2.2	4.9	50	**2.2**	4.42	50	–	–	–	**GV2ME10**	4…6.3	**LC1K06** or **LC1D09**
	–	–	–	**3**	5.77	50	**3**	5.2	50			
	3	6.5	50	–	–	–	**4**	6.8	10	**GV2ME14**	6…10	**LC1K09** or **LC1D09**
	4	8.5	50	**4**	7.9	15	**5.5**	9.2	10			
	5.5	11.5	15	**5.5**	10.4	8	**7.5**	12.4	6	**GV2ME16**	9…14	**LC1K12** or **LC1D12**
	7.5	15.5	15	**7.5**	13.7	8	**9**	13.9	6	**GV2ME20**	13…18	**LC1D18**
	–	–	–	**9**	16.9	8	–	–	–			
	9	18.1	15	**11**	20.1	6	**11**	17.6	4	**GV2ME21**	17…23	**LC1D25**
	11	22	15	–	–	–	**15**	23	4	**GV2ME22**	20…25	**LC1D25**
	15	29	10	**15**	26.5	6	**18.5**	28	4	**GV2ME32**	24…32	**LC1D32**
	18.5	35	50	**18.5**	32.8	50	**22**	33	10	**GV3P40**	30…40	**LC1D40A**
	22	41	50	**22**	39	50	**30**	44	10	**GV3P50**	37…50	**LC1D50A**
	30	55	50	**37**	51.5	50	**37**	53	10	**GV3P65**	48…65	**LC1D65A**
	–	–	–	**37**	64	25	**45**	64	18	**GV7RE80**	48…80	**LC1D65A**
	37	66	15	**45**	76	10	**55**	78	4	**GV3ME80**	56…80	**LC1D80**
	37	66	25	**45**	76	25	**55**	78	18	**GV7RE80**	48…80	**LC1D80**
	45	80	25	–	–	–	–	–	–	**GV7RE100**	60…100	**LC1D95**
	–	–	–	**50**	90	25	–	–	–	**GV7RE100**	60…100	**LC1D115**
	55	97	25	–	–	–	**75**	106	30	**GV7RE150**	90…150	**LC1D115**
	75	132	35	**75**	125	35	**90**	128	30	**GV7RE150**	90…150	**LC1D150**
	–	–	–	**90**	146	35	–	–	–	**GV7RE150**	90…150	**LC1F185**
	90	160	35	–	–	–	**110**	156	30	**GV7RE220**	132…220	**LC1F185**
	–	–	–	–	–	–	**132**	184	30	**GV7RE220**	132…220	**LC1F265**
	–	–	–	**110**	178	35	**160**	224	30			
	110	195	35	**132**	215	35	–	–	–	**GV7RE220**	132…220	**LC1F225**

*(1) The breaking performance of circuit breakers **GV2 ME** can be increased by adding a current limiter **GV1 L3**, see page 24509/5.*
(2) For reversing operation, replace the prefix LC1 with LC2.

TeSys motor starters - open version

D.O.L. starters with circuit breaker and overload protection built into the circuit breaker

0.06 to 110 kW at 400/415 V: type 2 coordination

Standard power ratings of 3-phase mot or s 50/60 Hz in categ or y AC-3									Circuit breaker		Contactor
400/415 V			440 V			500 V			Reference	Setting range of thermal trips	Reference (2)
P	Ie	Iq (1)	P	Ie	Iq (1)	P	Ie	Iq (1)			
kW	A	kA	kW	A	kA	kW	A	kA		A	
0.06	0.2	130	**0.06**	0.19	130	–	–	–	**GV2P02** or **GV2ME02**	0.16…0.25	**LC1D09**
–	–	–	**0.09**	0.28	130	–	–	–	**GV2P03** or **GV2ME03**	0.25…0.4	**LC1D09**
0.09	0.3	130	**0.12**	0.37	130	–	–	–			
0.12	0.44	130	–	–	–	–	–	–	**GV2P04** or **GV2ME04**	0.4…0.63	**LC1D09**
0.18	0.6	130	**0.18**	0.55	130	–	–	–			
0.25	0.85	130	**0.25**	0.76	130	–	–	–	**GV2P05** or **GV2ME05**	0.63…1	**LC1D09**
0.37	1.1	130	**0.37**	0.99	130	–	–	–			
–	–	–	–	–	–	**0.37**	0.88	130	**GV2P06** or **GV2ME06**	1…1.6	**LC1D09**
0.55	1.5	130	**0.55**	1.36	130	**0.55**	1.2	130			
–	–	–	–	–	–	**0.75**	1.5	130	**GV2P06** or **GV2ME06**	1…1.6	**LC1D09**
0.75	1.9	130	**0.75**	1.68	130	–	–	–	**GV2P07** or **GV2ME07**	1.6…2.5	**LC1D09**
–	–	–	**1.1**	2.37	130	**1.1**	2.2	130			
1.1	2.7	130	–	–	–	**1.5**	2.9	130	**GV2P08** or **GV2ME08**	2.5…4	**LC1D09**
1.5	3.6	130	**1.5**	3.06	130	**2.2**	3.9	130			
–	–	–	–	–	–	–	–	–	**GV2P10** or **GV2ME10**	4…6.3	**LC1D09**
2.2	4.9	130	–	–	–	–	–	–			
–	–	–	**2.2**	4.42	50	–	–	–	**GV2ME10**	4…6.3	**LC1D09**
–	–	–	**3**	5.77	50	**3**	5.2	50			
–	–	–	**2.2**	4.42	130	–	–	–	**GV2P10**	4…6.3	**LC1D09**
–	–	–	**3**	5.77	130	**3**	5.2	130			
3	6.5	130	–	–	–	–	–	–	**GV2P14** or **GV2ME14**	6…10	**LC1D09**
4	8.5	130	–	–	–	–	–	–			
–	–	–	**4**	7.9	15	**4**	6.8	10	**GV2ME14**	6…10	**LC1D09**
–	–	–	–	–	–	**5.5**	9.2	10			
–	–	–	–	–	–	**4**	6.8	50	**GV2P14**	6…10	**LC1D12**
–	–	–	**4**	7.9	130	**5.5**	9.2	50			
5.5	11.5	130	**5.5**	10.4	50 or 8	**7.5**	12.4	42 or 6	**GV2P16** or **GV2ME16**	9…14	**LC1D25**
–	–	–	**7.5**	13.7	50 or 8	**9**	13.9	42 or 6			
7.5	15.5	50 or 15	**9**	16.9	20 or 8	–	–	–	**GV2P20** or **GV2ME20**	13…18	**LC1D25**
9	18.1	50 or 15	**11**	20.1	20 or 8	**11**	17.6	10 or 6	**GV2P21** or **GV2ME21**	17…23	**LC1D25**
11	22	50 or 15	–	–	–	–	–	–	**GV2P22** or **GV2ME22**	20…25	**LC1D25**
–	–	–	–	–	–	**15**	23	10 or 6	**GV2P22**	20…25	**LC1D32**
15	29	50 or 10	**15**	26.5	20 or 6	**18.5**	28	10 or 4	**GV2P32** or **GV2ME32**	25…40	**LC1D32**
18.5	35	50	–	–	–	–	–	–	**GV3P40**	30…40	**LC1D50A**
–	–	–	**18.5**	32.8	50	**22**	33	10	**GV3P40**	30…40	**LC1D65A**
22	41	50	–	–	–	–	–	–	**GV3P50**	37…50	**LC1D50A**
–	–	–	**22**	39	50	**30**	44	10	**GV3P50**	37…50	**LC1D65A**
30	55	50	**37**	51.5	50	–	–	–	**GV3P65**	48…65	**LC1D65A**
–	–	–	–	–	–	**37**	53	10	**GV3P65**	48…65	**LC1D80**
–	–	–	**22**	39	65	–	–	–	**GV7RS40**	25…40	**LC1D80**
–	–	–	–	–	–	**30**	44	50	**GV7RS50**	30…50	**LC1D80**
–	–	–	–	–	–	**37**	53	50	**GV7RS80**	48…80	**LC1D80**
22	41	70	–	–	–	–	–	–	**GV7RS50**	30…50	**LC1D80**
30	55	70	**30**	51.5	65	–	–	–	**GV7RS80**	48…80	**LC1D80**
37	66	70	**37**	64	65	–	–	–	**GV7RS80**	48…80	**LC1D80**
–	–	–	**45**	76	65	–	–	–	**GV7RS80**	48…80	**LC1D80**
–	–	–	–	–	–	**45**	64	50	**GV7RS80**	48…80	**LC1D115**
–	–	–	–	–	–	**55**	78	50	**GV7RS80**	48…80	**LC1D115**
45	80	70	–	–	–	–	–	–	**GV7RS100**	60…100	**LC1D115**
–	–	–	**55**	90	65	–	–	–			
55	97	70	**75**	125	65	–	–	–	**GV7RS150**	90…150	**LC1D150**
75	132	70	**90**	146	65	**90**	128	50			
90	160	70	**110**	178	65	**110**	156	50	**GV7RS220**	132…220	**LC1F185**
110	195	70	**132**	215	65	–	–	–	**GV7RS220**	132…220	**LC1F225**
–	–	–	–	–	–	**132**	184	50	**GV7RS220**	132…220	**LC1F265**
–	–	–	–	–	–	**160**	224	50			

*(1) The breaking perf or mance of circuit breakers **GV2 P** can be increased by adding a current limiter **GV1 L3**, see page 24509/5.*
*(2) Combinations with circuit breaker **GV2 ME** are type 2 co or dinated only at 400/415 V and 440 V.*

TeSys motor starters - open version

D.O.L. starters with circuit breaker and overload protection by separate thermal overload relay

0.06 to 250 kW at 400/415 V: type 1 coordination

Standard power ratings of 3-phase motors 50/60 Hz in category AC-3									Circuit breaker			Contactor	Thermal overload relay	
400/415 V			440 V			500 V			Reference	Rating	Irm (1)	Reference (2)	Reference	Setting range
P	Ie	Iq	P	Ie	Iq	P	Ie	Iq						
kW	A	kA	kW	A	kA	kW	A	kA		A	A			A
0.06	0.2	50	0.06	0.19	50	–	–	–	GV2LE03	0.4	5	LC1K06	LR2K0302	0.16…0.23
–	–	–	0.09	0.28	50	–	–	–	GV2LE03	0.4	5	LC1K06	LR2K0303	0.23…0.36
0.09	0.3	50	0.12	0.37	50	–	–	–	GV2LE03	0.4	5	LC1K06	LR2K0304	0.36…0.54
0.12	0.44	50				–	–	–	GV2LE04	0.63	8	LC1K06	LR2K0304	0.36…0.54
0.18	0.6	50	0.18	0.55	50	–	–	–	GV2LE04	0.63	8	LC1K06	LR2K0305	0.54…0.8
–	–	–	0.25	0.76	50	–	–	–	GV2LE05	1	13	LC1K06	LR2K0305	0.54…0.8
0.25 0.37	0.85 1.1	50 50	– 0.37	– 1	– 50	– 0.37	– 0.88	– 50	GV2LE05	1	13	LC1K06	LR2K0306	0.8…1.2
0.55 –	1.5 –	50 –	0.55 –	1.36 –	50 –	0.55 0.75	1.2 1.5	50 50	GV2LE06	1.6	22.5	LC1K06	LR2K0307	1.2…1.8
–	–	–	0.75	1.68	50	–	–	–	GV2LE07	2.5	33.5	LC1K06	LR2K0307	1.2…1.8
0.75 1.1	1.9 2.7	50 50	– 1.1	– 2.37	– 50	– 1.1	– 2.2	– 50	GV2LE07	2.5	33.5	LC1K06	LR2K0308	1.8…2.6
1. 5	3.6	50	1.5	3.06	50	1.5	2.9	50	GV2LE08	4	51	LC1K06	LR2K0310	2.6…3.7
–	–	–	–	–	–	2.2	3.9	50	GV2LE08	4	51	LC1K06	LR2K0312	3.7…5.5
2.2	4.9	50	2.2	4.4	50	3	5.2	50	GV2LE10	6.3	78	LC1K06	LR2K0312	3.7…5.5
–	–	–	3	5.77	50	–	–	–	GV2LE10	6.3	78	LC1K06	LR2K0314	5.5…8
–	–	–	4	7.9	15	–	–	–	GV2LE14	10	138	LC1K09	LR2K0314	5.5…8
3	6.5	50	–	–	–	4	6.8	10	GV2LE14	10	138	LC1K09	LR2K0314	5.5…8
4	8.5	50	–	–	–	–	–	–	GV2LE14	10	138	LC1K09	LR2K0316	8…11.5
5.5	11.5	15	5.5	10.4	8	7.5	12.4	6	GV2LE16	14	170	LC1K12	LR2K0321	10…14
–	–	–	7.5	13.7	8	9	13.9	6	GV2LE16	14	170	LC1D18	LRD21	12…18
7.5	15.5	15	9	16.9	8	–	–	–	GV2LE20	18	223	LC1D18	LRD21	12…18
9	18.1	15	–	–	–	11	17.6	4	GV2LE22	25	327	LC1D25	LRD22	16…24
11	22	15	11	20.1	6	15	23	4	GV2LE22	25	327	LC1D25	LRD22	16…24
15	29	10	15	26.5	6	18.5	28	4	GV2LE32	32	416	LC1D32	LRD32	23…32
18.5	35	50	18.5	32.5	50	22	33	10	GV3L40	40	560	LC1D40A	LRD340	30…40
22	41	50	22	39	50	30	44	10	GV3L50	50	700	LC1D50A	LRD350	37…50

(1) Irm: setting current of the magnetic trip.
(2) For reversing operation, replace the prefix LC1 with LC2.

TeSys motor starters - open version

D.O.L. starters with circuit breaker and overload protection by separate thermal overload relay

0.06 to 250 kW at 400/415 V: type 1 coordination

Standard power ratings of 3-phase motors 50/60 Hz in category AC-3									Circuit breaker			Contactor	Thermal overload relay	
400/415 V			440 V			500 V			Reference	Rating	Irm (1)	Reference (2)	Reference	Setting range
P	Ie	Iq	P	Ie	Iq	P	Ie	Iq						
kW	A	kA	kW	A	kA	kW	A	kA		A	A			A
30	55	50	**37**	51.5	50	**37**	53	10	**GV3L65**	65	910	**LC1D65A**	**LRD365**	48…65
–	–	–	**37**	64	50	**37**	53	10	**GV3L65**	65	910	**LC1D65A**	**LRD365**	48…65
–	–	–	–	–	–	**45**	64	50	**GV3L65**	65	910	**LC1D80**	**LRD3361**	48…65
37	66	70	**45**	76	65	**55**	78	25	**NSX80HMA**	80	1040	**LC1D80**	**LRD3363**	63…80
45	80	(3)	–	–	–	–	–	–	**NSX100●MA** (3)	100	1300	**LC1D95**	**LRD3365**	80…104
–	–	–	–	–	–	**50**	90	(3)	**NSX100●MA** (3)	100	1200	**LC1D115**	**LRD4365**	80…104
–	–	–	–	–	–	**75**	106	(3)	**NSX160●MA** (3)	150	1500	**LC1D115**	**LRD4367**	95…120
55	97	(3)	–	–	–	–	–	–	**NSX160●MA** (3)	150	1350	**LC1D115**	**LRD4367**	95…120
75	132	(3)	**75**	125	(3)	**90**	128	(3)	**NSX160●MA** (3)	150	1800	**LC1D150**	**LRD4369**	110…140
–	–	–	**90**	146	(3)	–	–	–	**NSX160●MA** (3)	150	1950	**LC1F185**	**LR9F5371**	132…220
90	160	(3)	–	–	–	**110**	156	(3)	**NSX250●MA** (3)	220	2200	**LC1F185**	**LR9F5371**	132…220
110	195	(3)	–	–	–	–	–	–	**NSX250●MA** (3)	220	2640	**LC1F225**	**LR9F5371**	132…220
–	–	–	**110**	178	(3)	–	–	–	**NSX250●MA** (3)	220	2420	**LC1F225**	**LR9F5371**	132…220
–	–	–	–	–	–	**132**	184	(3)	**NSX250●MA** (3)	220	2640	**LC1F265**	**LR9F5371**	132…220
–	–	–	**132**	215	(3)	–	–	–	**NSX250●MA** (3)	220	2860	**LC1F265**	**LR9F5371**	132…220
132	230	(3)	–	–	–	–	–	–	**NSX400● + Micrologic 1.3M** (3)	320	3200	**LC1F265**	**LR9F7375**	200…330
–	–	–	–	–	–	**160**	224	(3)	**NSX400● + Micrologic 1.3M** (3)	320	2860	**LC1F265**	**LR9F7375**	200…330
–	–	–	**160**	256	(3)	–	–	–	**NSX400● + Micrologic 1.3M** (3)	320	3520	**LC1F330**	**LR9F7375**	200…330
160	280	(3)	**200**	321	(3)	–	–	–	**NSX400● + Micrologic 1.3M** (3)	320	4160	**LC1F330**	**LR9F7375**	200…330
–	–	–	–	–	–	**200**	280	(3)	**NSX400● + Micrologic 1.3M** (3)	320	3840	**LC1F330**	**LR9F7375**	200…330
–	–	–	–	–	–	**220**	310	(3)	**NSX400● + Micrologic 1.3M** (3)	320	4160	**LC1F400**	**LR9F7379**	300…500
200	350	(3)	**220**	353	(3)	–	–	–	**NSX630● + Micrologic 1.3M** (3)	500	5000	**LC1F400**	**LR9F7379**	300…500
–	–	–	**250**	401	(3)	–	–	–	**NSX630● + Micrologic 1.3M** (3)	500	5550	**LC1F400**	**LR9F7379**	300…500
–	–	–	–	–	–	**250**	344	(3)	**NSX630● + Micrologic 1.3M** (3)	500	5000	**LC1F400**	**LR9F7379**	300…500
220	388	(3)	–	–	–	–	–	–	**NSX630● + Micrologic 1.3M** (3)	500	5500	**LC1F400**	**LR9F7379**	300…500
250	430	(3)	**280**	470	(3)	**315**	432	(3)	**NSX630● + Micrologic 1.3M** (3)	500	6000	**LC1F500**	**LR9F7379**	300…500
–	–	–	–	–	–	**355**	488	(3)	**NSX630● + Micrologic 1.3M** (3)	500	6500	**LC1F500**	**LR9F7381**	380…630

(1) Irm: setting current of the magnetic trip.
(2) For reversing operation, replace the prefix LC1 with LC2.
(3) Reference to be completed by replacing the ● with the breaking performance code:

Breaking performance Iq (kA)	NSX100●MA		NSX160●MA and NSX250●MA		NSX400● and NSX630●	
400/415 V	36	70	36	70	70	150
440 V	35	65	35	65	65	130
500 V	25	50	25	50	50	70
660/690 V	8	10	8	10	20	20
Code	**F**	**H**	**F**	**H**	**H**	**L**

TeSys motor starters - open version

D.O.L. starters with circuit breaker and overload protection by separate thermal overload relay

0.06 to 250 kW at 400/415 V: type 2 coordination

Standard power ratings of 3-phase motors 50/60 Hz in category AC-3									Circuit breaker			Contactor	Thermal overload relay	
400/415 V			440 V			500 V			Reference	Rating	Irm (1)	Reference (2)	Reference	Setting range
P	Ie	Iq	P	Ie	Iq	P	Ie	Iq						
kW	A	kA	kW	A	kA	kW	A	kA		A	A			A
0.06	0.2	130	0.06	0.19	130	–	–	–	GV2L03 or LE03	0.4	5	LC1D09	LRD02	0.16…0.25
0.09	0.3	130	0.09	0.28	130	–	–	–	GV2L03 or LE03	0.4	5	LC1D09	LRD03	0.25…0.40
–	–	–	0.12	0.37	130	–	–	–						
0.12	0.44	130	–	–	–	–	–	–	GV2L04 or LE04	0.63	8	LC1D09	LRD04	0.4…0.63
0.18	0.6	130	0.18	0.55	130	–	–	–						
0.25	0.85	130	0.25	0.76	130	–	–	–	GV2L05 or LE05	1	13	LC1D09	LRD05	0.63…1
0.37	1.1	130	0.37	0.99	130	–	–	–						
–	–	–	–	–	–	0.37	0.88	130	GV2L05 or LE05	1	13	LC1D09	LRD06	1…1.7
0.55	1.5	130	–	–	–	0.55	1.2	130	GV2L06 or LE06	1.6	22.5	LC1D09	LRD06	1…1.7
–	–	–	0.55	1.36	130	0.75	1.5	130						
0.75	1.9	130	0.75	1.68	130	1.1	2.2	130	GV2L07 or LE07	2.5	33.5	LC1D09	LRD07	1.6…2.5
1.1	2.7	130	1.1	2.37	130	1.5	2.9	130	GV2L08 or LE08	4	51	LC1D09	LRD08	2.5…4
1.5	3.6	130	–	–	–	2.2	3.9	130						
–	–	–	1.5	3.06	130	–	–	–	GV2L08 or LE08	4	51	LC1D09	LRD10	4…6
2.2	4.9	130	–	–	–	–	–	–	GV2L10 or LE10	6.3	78	LC1D09	LRD10	4…6
–	–	–	–	–	–	3	5.2	13						
–	–	–	2.2	4.42	50	–	–	–	GV2LE10	6.3	78	LC1D09	LRD10	4…6
–	–	–	3	5.77	50	3	5.2	50						
–	–	–	2.2	4.42	130	–	–	–	GV2L10	6.3	78	LC1D09	LRD10	4…6
–	–	–	3	5.77	130	3	5.2	130						
3	6.5	130	–	–	–	–	–	–	GV2L14 or LE14	10	10	LC1D09	LRD12	5.5…8
–	–	–	–	–	–	4	6.8	10	GV2LE14	10	138	LC1D12	LRD12	5.5…8
–	–	–	–	–	–	4	6.8	50	GV2L14	10	138	LC1D12	LRD12	5.5…8
4	8.5	130	–	–	–	–	–	–	GV2L14 or LE14	10	138	LC1D09	LRD14	7…10
–	–	–	4	7.9	15	–	–	–	GV2LE14	10	138	LC1D09	LRD14	7…10
–	–	–	4	7.9	130	–	–	–	GV2L14	10	138	LC1D09	LRD14	7…10
–	–	–	–	–	–	5.5	9.2	10	GV2LE14	10	138	LC1D09	LRD14	7…10
–	–	–	–	–	–	5.5	9.2	50	GV2L14	10	138	LC1D09	LRD14	7…10
5.5	11.5	130	5.5	10.4	50	7.5	12.4	42	GV2L16	14	170	LC1D25	LRD16	9…13
–	–	–	7.5	13.7	50	–	–	–	GV2L16	14	170	LC1D25	LRD21	12…18
7.5	15.5	50	9	16.9	20	9	13.9	10	GV2L20	18	223	LC1D25	LRD21	12…18
9	18.1	50	–	–	–	–	–	–	GV2L22	25	327	LC1D25	LRD22	16…24
11	22	50	11	20.1	20	–	–	–						
–	–	–	–	–	–	11	17.6	10	GV2L22	25	327	LC1D32	LRD22	16…24
–	–	–	–	–	–	15	23	10						
15	29	50	15	26.5	50	–	–	–	GV3L32	32	448	LC1D40A	LRD332	23…32
–	–	–	–	–	–	18.5	28	10	GV3L32	32	448	LC1D65A	LRD332	23…32

(1) Irm: setting current of the magnetic trip.
(2) For reversing operation, replace the prefix LC1 with LC2.

TeSys motor starters - open version

D.O.L. starters with circuit breaker and overload protection by separate thermal overload relay

0.06 to 250 kW at 400/415 V: type 2 coordination

Standard power ratings of 3-phase motors 50/60 Hz in category AC-3									Circuit breaker			Contactor	Thermal overload relay	
400/415 V			440 V			500 V			Reference	Rating	Irm (1)	Reference (2)	Reference	Setting range
P	Ie	Iq	P	Ie	Iq	P	Ie	Iq						
kW	A	kA	kW	A	kA	kW	A	kA		A	A			A
18.5	35	50	–	–	–	–	–	–	**GV3L40**	40	560	**LC1D50A**	**LRD340**	30…40
–	–	–	**18.5**	32.5	50	–	–	–	**GV3L40**	40	560	**LC1D65A**	**LRD340**	30…40
22	41	50	–	–	–	–	–	–	**GV3L50**	50	700	**LC1D50A**	**LRD350**	37…50
	–	–	**22**	39	50	**30**	44	10	**GV3L50**	50	700	**LC1D65A**	**LRD350**	37…50
30	55	50	**37**	51.5	50	–	–	–	**GV3L65**	65	910	**LC1D65A**	**LRD365**	48…65
–	–	–	**37**	64	50	**37**	53	10	**GV3L65**	65	910	**LC1D80**	**LRD3359**	48…65
37	66	70	**45**	76	65	–	–	–	**NS80HMA**	80	1000	**LC1D80**	**LRD3363**	63…80
–	–	–	–	–	–	**55**	78	(3)	**NSX100●MA** (3)	100	1040	**LC1D80**	**LRD3363**	63…80
45	80	(3)	**55**	90	(3)	–	–	–	**NSX100●MA** (3)	100	1300	**LC1D115**	**LR9D5367**	60…100
55	97	(3)	–	–	–	–	–	–	**NSX160●MA** (3)	150	1500	**LC1D115**	**LR9D5369**	90…150
–	–	–	–	–	–	**75**	106	(3)	**NSX160●MA** (3)	150	1950	**LC1D115**	**LR9D5369**	90…150
75	132	(3)	**75**	125	(3)	–	–	–	**NSX160●MA** (3)	150	1950	**LC1D150**	**LR9D5369**	90…150
–	–	–	**90**	146	(3)	–	–	–	**NSX160●MA** (3)	150	1950	**LC1D150**	**LR9D5369**	90…150
–	–	–	–	–	–	**90**	128	(3)	**NSX160●MA** (3)	150	1200	**LC1D150**	**LR9D5369**	90…150
90	160	(3)	**110**	178	(3)	–	–	–	**NSX250●MA** (3)	220	2420	**LC1F185**	**LR9F5371**	132…220
–	–	–	–	–	–	**110**	156	(3)	**NSX250●MA** (3)	220	1540	**LC1F185**	**LR9F5371**	132…220
110	195	(3)	–	–	–	–	–	–	**NSX250●MA** (3)	220	2860	**LC1F225**	**LR9F5371**	132…220
–	–	–	**132**	215	(3)	**132**	184	(3)	**NSX400●** + **Micrologic 1.3M** (3)	320	3500	**LC1F265**	**LR9F5371**	132…220
132	230	(3)	**160**	256	(3)	–	–	–	**NSX400●** + **Micrologic 1.3M** (3)	320	3520	**LC1F265**	**LR9F7375**	200…330
–	–	–	–	–	–	**160**	224	(3)	**NSX400●** + **Micrologic 1.3M** (3)	320	2200	**LC1F265**	**LR9F7375**	200…330
160	280	(3)	–	–	–	–	–	–	**NSX400●** + **Micrologic 1.3M** (3)	320	4000	**LC1F330**	**LR9F7375**	200…330
–	–	–	**200**	321	(3)	–	–	–	**NSX400●** + **Micrologic 1.3M** (3)	320	4000	**LC1F330**	**LR9F7379**	300…500
–	–	–	–	–	–	**200**	280	(3)	**NSX400●** + **Micrologic 1.3M** (3)	320	3500	**LC1F400**	**LR9F7375**	200…330
–	–	–	–	–	–	**220**	310	(3)	**NSX400●** + **Micrologic 1.3M** (3)	320	3500	**LC1F400**	**LR9F7379**	300…500
–	–	–	**220**	353	(3)	–	–	–	**NSX630●** + **Micrologic 1.3M** (3)	500	5500	**LC1F400**	**LR9F7379**	300…500
200	350	(3)	**250**	401	(3)	–	–	–						
–	–	–	–	–	–	**250**	344	(3)	**NSX630●** + **Micrologic 1.3M** (3)	500	4500	**LC1F500**	**LR9F7379**	300…500
–	–	–	–	–	–	**315**	432	(3)						
220	388	(3)	–	–	–	–	–	–	**NSX630●** + **Micrologic 1.3M** (3)	500	6250	**LC1F500**	**LR9F7379**	300…500
250	430	(3)	–	–	–	–	–	–						
–	–	–	–	–	–	**355**	488	(3)	**NSX630●** + **Micrologic 1.3M** (3)	500	5000	**LC1F630**	**LR9F7381**	380…630

(1) Irm: setting current of the magnetic trip.
(2) For reversing operation, replace the prefix LC1 with LC2.
(3) Reference to be completed by replacing the ● with the breaking performance code:

Breaking performance Iq (kA)	NSX100●MA		NSX160●MA and NSX250●MA		NSX400● and NSX630●	
400/415 V	36	70	36	70	70	150
440 V	35	65	35	65	65	130
500 V	25	50	25	50	50	70
660/690 V	8	10	8	10	20	20
Code	**F**	**H**	**F**	**H**	**H**	**L**

TeSys motor starters - open version

Star-delta starters with fuse protection (NF C or DIN fuses)

1.5 to 315 kW at 400/415 V: type 1 coordination

Maximum operating rate: LC3 K and LC3 F: 12 starts/hour; LC3 D: 30 starts/hour.
Maximum starting time: LC3 K and LC3 D: 30 seconds; LC3 F: 20 seconds.

Standard power ratings of 3-phase motors 50/60 Hz in category AC-3								Fuse carrier (basic block)	aM fuses		Star-delta contactors	Thermal overload relay	
400/415 V				440 V				Reference	Size	Rating	Reference	Reference	Setting range
P	Ie	IrD (1)	Iq	P	Ie	IrD (1)	Iq						
kW	A	A	kA	kW	A	A	kA			A			A
1.5	3.5	2	50	1.5	3.06	2	50	LS1D32	10 x 38	4	LC3K06	LR2K0308	1.8…2.6
2.2	5	3	50	–	–	–	–	LS1D32	10 x 38	6	LC3K06	LR2K0310	2.6…3.7
–	–	–	–	2.2	4.42	3	50						
–	–	–	–	3	5.77	3	50	LS1D32	10 x 38	8	LC3K06	LR2K0310	2.6…3.7
3	6.5	4	50	–	–	–	–	LS1D32	10 x 38	8	LC3K06	LR2K0312	3.7…5.5
4	8.4	5	50	4	7.9	5	50	LS1D32	10 x 38	12	LC3K06	LR2K0312	3.7…5.5
5.5	11	6	50	5.5	10.4	6	50	LS1D32	10 x 38	16	LC3K06	LR2K0314	5.5…8
7.5	14.8	9	50	7.5	13.7	8	50	LS1D32	10 x 38	16	LC3K09	LR2K0316	8…11.5
9	18.1	10	100	9	16.9	10	50	LS1D32	10 x 38	20	LC3D12A	LRD16	9…13
11	21	12	100	11	20.1	12	100	GK1EK	14 x 51	25	LC3D12A	LRD16	9…13
15	28.5	16	100	15	26.5	15	100	GK1EK	14 x 51	32	LC3D18A	LRD21	12…18
18.5	35	20	100	18.5	32.8	19	100	GK1EK	14 x 51	40	LC3D18A	LRD22	16…24
–	–	–	–	22	39	23	100	GS●J	22 x 58	50	LC3D18A	LRD22	16…24
22	42	24	100	–	–	–	–	GS●J	22 x 58	50	LC3D32A	LRD32	23…32
–	–	–	–	30	51.5	30	100	GS●J	22 x 58	63	LC3D32A	LRD32	23…32
30	57	33	100	37	64	37	100	GS●J	22 x 58	80	LC3D40	LRD3355	30…40
37	69	40	100	–	–	–	–	GS●J	22 x 58	80	LC3D40	LRD3357	37…50
–	–	–	–	45	76	44	100	GS●J	22 x 58	80	LC3D50	LRD3357	37…50
45	81	47	100	–	–	–	–	GS●J	22 x 58	100	LC3D50	LRD3357	37…50
–	–	–	–	55	90	52	100	GS●K	22 x 58	100	LC3D50	LRD3359	48…65
55	100	58	100	–	–	–	–	GS●K	22 x 58	125	LC3D50	LRD3361	55…70
75	135	78	100	75	125	72	100	GS●L	T0	160	LC3D80	LRD3363	63…80
–	–	–	–	90	146	84	100	GS●L	T0	160	LC3D115	LRD4365	80…104
90	165	95	100	–	–	–	–	GS●N	T1	200	LC3D115	LRD4367	95…120
110	200	115	100	110	178	103	100	GS●N	T1	200	LC3D115	LRD4367	95…120
132	240	139	100	132	215	124	100	GS●QQ	T2	250	LC3D150	LRD4369	110…140
160	285	165	100	160	256	148	100	GS●QQ	T2	315	LC3F185	LR9F5371	132…220
–	–	–	–	200	321	185	100	GS●QQ	T2	400	LC3F225	LR9F5369	132…220
220	388	225	100	–	–	–	–	GS●QQ	T2	400	LC3F265	LR9F7375	200…330
–	–	–	–	250	401	233	100	GS2S	T3	500	LC3F265	LR9F7375	200…330
280	480	278	100	–	–	–	–	GS2S	T3	500	LC3F330	LR9F7375	200…330
–	–	–	–	315	505	293	100						
315	555	322	100	355	518	300	100	GS2S	T3	630	LC3F330	LR9F7375	200…330
–	–	–	–	375	575	334	100	GS2S	T3	630	LC3F400	LR9F7379	300…500

(1) IrD: current in the motor windings in delta connection.

TeSys motor starters - open version

Star-delta starters with fuse protection (NF C or DIN fuses)

1.5 to 355 kW at 400/415 V: type 2 coordination

Maximum operating rate: LC1 D: 30 starts/hour; LC1 F: 12 starts/hour.
Maximum starting time: LC1 D: 30 seconds; LC1 F: 20 seconds.

Standard power ratings of 3-phase motors 50/60 Hz in category AC-3						Switch-disconnector-fuse	aM fuses		Star-delta contactors	Thermal overload relay	
400/415 V			440 V			Reference	Size	Rating	Reference	Reference	Setting range
P	Ie	Iq	P	Ie	Iq						
kW	A	kA	kW	A	kA			A			A
1.5	3.5	50	**1.5**	3.06	50	**GS1DD**	10 x 38	4	3 x **LC1D09**	**LRD08**	2.5…4
2.2	5	50	**2.2**	4.42	50	**GS1DD**	10 x 38	6	3 x **LC1D09**	**LRD10**	4…6
3	6.5	50	**3**	5.77	50	**GS1DD**	10 x 38	8	3 x **LC1D09**	**LRD12**	5.5…8
4	8.4	50	**4**	7.9	50	**GS1DD**	10 x 38	10	3 x **LC1D09**	**LRD14**	7…10
5.5	11	50	**5.5**	10.4	50	**GS1DD**	10 x 38	16	3 x **LC1D12**	**LRD16**	9…13
7.5	14.8	50	**7.5**	13.7	50	**GS1DD**	10 x 38	16	3 x **LC1D18**	**LRD21**	12…18
9	18.1	100	**9**	16.9	100						
11	21	100	**11**	20.1	100	**GS•F**	14 x 51	25	3 x **LC1D25**	**LRD22**	16…24
15	28.5	100	**15**	26.5	100	**GS•F**	14 x 51	32	3 x **LC1D32**	**LRD32**	23…32
18.5	35	100	**18.5**	32.8	100	**GS•F**	14 x 51	40	3 x **LC1D40A**	**LRD340**	30…40
22	42	100	**22**	39	100	**GS•J**	22 x 58	50	3 x **LC1D50A**	**LRD350**	37…50
30	57	100	**30**	51.5	100	**GS•J**	22 x 58	80	3 x **LC1D65A**	**LRD365**	48…65
37	69	100	**37**	64	100	**GS•J**	22 x 58	80	3 x **LC1D80**	**LRD3363**	63…80
–	–	–	**45**	76	100	**GS•J**	22 x 58	80	3 x **LC1D80**	**LRD3365**	80…93
45	81	100	–	–	–	**GS•J**	22 x 58	100	3 x **LC1D115**	**LR9D5367**	60…100
–	–	–	**55**	90	100	**GS•L**	T0	125	3 x **LC1D115**	**LR9D5369**	90…150
55	100	100	–	–	–	**GS•L**	T0	125	3 x **LC1D150**	**LR9D5369**	90…150
–	–	–	**75**	125	100	**GS•L**	T0	160	3 x **LC1D150**	**LR9D5369**	90…150
75	135	100	–	–	–	**GS•L**	T0	160	3 x **LC1F185**	**LR9D5369**	90…150
90	165	100	**90**	146	100	**GS•N**	T1	200	3 x **LC1F185**	**LR9F5371**	132…220
110	200	100	**110**	178	100	**GS•N**	T1	250	3 x **LC1F225**	**LR9F5371**	132…220
132	240	100	**132**	215	100	**GS•QQ**	T2	315	3 x **LC1F265**	**LR9F7375**	200…330
160	285	100	**160**	256	100	**GS•QQ**	T2	400	3 x **LC1F330**	**LR9F7375**	200…330
–	–	–	**200**	321	100	**GS•QQ**	T2	400	3 x **LC1F330**	**LR9F7379**	300…500
200	352	100	**220**	353	100						
220	388	100	**250**	401	100	**GS2S**	T3	500	3 x **LC1F400**	**LR9F7379**	300…500
250	437	100	–	–	–	**GS2S**	T3	500	3 x **LC1F500**	**LR9F7379**	300…500
315	555	100	**315**	505	100	**GS2S**	T3	630	3 x **LC1F630**	**LR9F7381**	380…630
–	–	–	**355**	549	100						
–	–	–	**400**	611	100	**GS2V**	T4	800	3 x **LC1F630**	**LR9F7381**	380…630
355	605	100	–	–	–	**GS2V**	T4	800	3 x **LC1F780**	**LR9F7381**	380…630

TeSys motor starters - open version

Star-delta starters with fuse protection (BS fuses)

1.5 to 375 kW at 415 V: type 2 coordination

Maximum operating rate: LC1 D: 30 starts/hour; LC1 F: 12 starts/hour.
Maximum starting time: LC1 D: 30 seconds; LC1 F: 20 seconds.

Standard power ratings of 3-phase motors 50/60 Hz in category AC-3						Switch-disconnector-fuse	BS fuses		Contactor	Thermal overload relay	
415 V			440 V			Reference	Size	Rating	Reference	Reference	Setting range
P	Ie	Iq	P	Ie	Iq						
kW	A	kA	kW	A	kA			A			A
1.5	3.5	50	**1.5**	3.06	50	**GS1DDB**	A1	NIT 16	3 x **LC1D09**	**LRD08**	2.5…4
2.2	5	50	**2.2**	4.42	50	**GS1DDB**	A1	NIT 16	3 x **LC1D09**	**LRD10**	4…6
3	6.5	50	**3**	5.77	50	**GS1DDB**	A1	NIT 20	3 x **LC1D09**	**LRD12**	5.5…8
4	8.4	50	**4**	7.9	50	**GS1DDB**	A1	NIT 20	3 x **LC1D09**	**LRD14**	7…10
5.5	11	50	**5.5**	10.4	50	**GS1DDB**	A1	NIT 20M25	3 x **LC1D12**	**LRD16**	9…13
7.5	14.8	50	**7.5**	13.7	50	**GS1DDB**	A1	NIT 20M32	3 x **LC1D18**	**LRD21**	12…18
9	18.1	50	**9**	16.9	50	**GS2GB**	A2	TIA 32M35	3 x **LC1D18**	**LRD21**	12…18
11	21	50	**11**	20.1	50	**GS2GB**	A2	TIA 32M50	3 x **LC1D25**	**LRD22**	16…24
15	28.5	50	**15**	26.5	50	**GS2GB**	A2	TIA 32M63	3 x **LC1D32**	**LRD32**	23…32
22	42	50	**22**	39	50	**GS2GB**	A3	TIS 63M80	3 x **LC1D40**	**LRD3355**	30…40
–	–	–	**30**	51.5	50	**GS2GB**	A3	TIS 63M100	3 x **LC1D50**	**LRD3359**	48…65
30	57	50	**–**	–	–	**GS2GB**	A3	TIS 63M100	3 x **LC1D65**	**LRD3359**	48…65
45	81	50	**45**	76	50	**GS2LLB**	A4	TCP 100M125	3 x **LC1D80**	**LRD3363**	63…80
55	100	80	**55**	90	80	**GS2LLB**	A4	TCP 100M160	3 x **LC1D115**	**LR9D5369**	90…150
80	138	80	**80**	132	80	**GS2LB**	B2	TF 200M250	3 x **LC1D150**	**LR9D5369**	90…150
100	182	80	**100**	162	80	**GS2MMB**	B2	TF 200M250	3 x **LC1F185**	**LR9F5371**	132…220
110	196	80	**110**	178	80	**GS2MMB**	B2	TF 200M315	3 x **LC1F225**	**LR9F5371**	132…220
140	250	80	**140**	226	80	**GS2NB**	B3	TFK 315M355	3 x **LC1F265**	**LR9F7375**	200…330
160	285	80	**160**	256	80	**GS2QQB**	B3	TFK 315M355	3 x **LC1F330**	**LR9F7375**	200…330
220	388	80	**220**	353	80	**GS2QQB**	B4	TMF 400M450	3 x **LC1F400**	**LR9F7379**	300…500
257 **270**	450 460	80 80	**257** **270**	412 433	80 80	**GS2SB**	C2	TTM 500	3 x **LC1F500**	**LR9F7379**	300…500
375	610	80	**375**	577	80	**GS2SB**	C2	TTM 630	3 x **LC1F630**	**LR9F7381**	380…630

TeSys motor starters - open version

Star-delta starters with circuit breaker and overload protection built into the circuit breaker

1.5 to 110 kW at 400/415 V: type 1 coordination

Maximum operating rate: LC3 K: 12 starts/hour; LC3 D: 30 starts/hour.
Maximum starting time: 30 seconds.

Standard power ratings of 3-phase motors 50-60 Hz in category AC-3								Circuit breaker		Star-delta contactors
400/415 V				440 V				Reference	Setting range of thermal trips	Reference
P	Ie	IrD (1)	Iq (2)	P	Ie	IrD (1)	Iq (2)			
kW	A	A	kA	kW	A	A	kA		A	
1.5	3.6	2	50	**1.5**	3.06	1.8	50	**GV2ME08**	2.5…4	**LC3K06**
2.2	4.9	2.9	50	**2.2**	4.42	2.6	50	**GV2ME10**	4…6.3	**LC3K06**
–	–	–	–	**3**	5.77	3.3	50			
3	6.5	3.8	50	–	–	–	–	**GV2ME14**	6…10	**LC3K06**
4	8.5	4.9	50	**4**	7.9	4.6	15			
5.5	11.5	6.4	15	**5.5**	10.4	6	8	**GV2ME16**	9…14	**LC3K06**
7.5	15.5	8.6	15	**7.5**	13.7	7.9	8	**GV2ME20**	13…18	**LC3K09**
–	–	–	–	**9**	16.9	9.8	8	**GV2ME20**	13…18	**LC3D12A**
9	18.1	10	15	**11**	20.1	12	6	**GV2ME21**	17…23	**LC3D12A**
11	22	12	15	–	–	–	–	**GV2ME22**	20…25	**LC3D12A**
15	29	17	10	**15**	26.5	15	6	**GV2ME32**	24…32	**LC3D18A**
18.5	35	20	50	**18.5**	32.8	19	50	**GV3P40**	30…40	**LC3D18A**
–	–	–	–	**22**	39	23	50	**GV3P50**	37…50	**LC3D32A**
22	41	24	50	**30**	51.5	30	50	**GV3P50**	37…50	**LC3D32A**
30	55	33	50	**30**	51.5	30	50	**GV3P65**	48…65	**LC3D32A**
37	66	40	50	**37**	64	37	50	**GV3P65**	48…65	3 x **LC1D40A** (3)
37	66	40	25	**37**	64	37	25	**GV7RE80**	48…80	3 x **LC1D40A** (3)
–	–	–	–	**45**	76	44	10	**GV3ME80**	56…80	2 x **LC1D50A** +1 x **LC1D40A** (3)
–	–	–	–	**45**	76	44	25	**GV7RE80**	48…80	2 x **LC1D50A** +1 x **LC1D40A** (3)
45	80	47	25	–	–	–	–	**GV7RE100**	60…100	2 x **LC1D50A**
55	97	58	25	**55**	90	52	25			+1 x **LC1D40A** (3)
55	97	58	25	**55**	90	52	25	**GV7RE100**	60…100	2 x **LC1D65A** +1 x **LC1D40A** (3)
75	132	78	35	**75**	125	72	35	**GV7RE150**	90…150	**LC3D80**
–	–	–	–	**90**	146	84	35	**GV7RE150**	90…150	**LC3D115**
90	160	95	35	**110**	178	103	35	**GV7RE220**	132…220	**LC3D115**
110	195	115	35							
–	–	–	–	**132**	215	124	35	**GV7RE220**	132…220	**LC3D150**

(1) IrD: current in the motor windings in delta connection.
*(2) The breaking performance of circuit breakers **GV2 ME** can be increased by adding a current limiter **GV1 L3**, see page B6/23.*
*(3) For mounting 3 contactors **LC1 D●●A**, star-delta starter kit **LAD 9SD3** must be ordered separately, see page B8/23.*

TeSys motor starters - open version

Star-delta starters with circuit breaker and overload protection built into the circuit breaker

1.5 to 110 kW at 400/415 V: type 2 coordination

Maximum operating rate: LC1 D: 30 starts/hour; LC1 F: 12 starts/hour.
Maximum starting time: LC1 D: 30 seconds; LC1 F: 20 seconds.

Standard power ratings of 3-phase motors 50-60 Hz in category AC-3						Circuit breaker		Star-delta contactors
400/415 V			440 V			Reference	Setting range of thermal trips	Reference
P	Ie	Iq	P	Ie	Iq (1)			
kW	A	kA	kW	A	kA		A	
1.5	3.6	130	**1.5**	3.06	130	**GV2P08**	2.5…4	3 x **LC1D09** (2)
2.2	4.9	130	**2.2**	4.42	130	**GV2P10**	4…6.3	3 x **LC1D18** (3)
–	–	–	**3**	5.77	130	**GV2P10**	4...6.3	3 x **LC1D18** (3)
3	6.5	130	–	–	–	**GV2P14**	6…10	3 x **LC1D18** (3)
4	8.5	130	**4**	7.9	130	**GV2P14**	6…10	3 x **LC1D18** (3)
5.5	11.5	130	**5.5**	10.4	50	**GV2P16**	9…14	3 x **LC1D25** (3)
–	–	–	**7.5**	13.7	50	**GV2P16**	9…14	3 x **LC1D25** (3)
7.5	15.5	50	**9**	16.9	20	**GV2P20**	13…18	3 x **LC1D25** (3)
9	18.1	50	**11**	20.1	20	**GV2P21**	17…23	3 x **LC1D25** (3)
11	22	50	–	–	–	**GV2P22**	20…25	3 x **LC1D25** (3)
15	29	50	**15**	26.5	50	**GV3P32**	23…32	3 x **LC1D40A** (4)
18.5	35	50	–	–	–	**GV3P40**	30…40	2 x **LC1D50A** +1 x **LC1D40A** (3)
–	–	–	**18.5**	32.8	50	**GV3P40**	30…40	2 x **LC1D65A** +1 x **LC1D40A** (4)
22	41	50	–	–	–	**GV3P50**	37…50	2 x **LC1D50A** +1 x **LC1D40A** (3)
–	–	–	**22**	39	50	**GV3P50**	37…50	2 x **LC1D65A** +1 x **LC1D40A** (4)
30	55	50	**30**	51.5	50	**GV3P65**	48…65	2 x **LC1D65A** +1 x **LC1D40A** (4)
37	66	70	**37**	64	65	**GV7RS80**	48…80	3 x **LC1D80** (5)
–	–	–	**45**	76	65	**GV7RS80**	48…80	3 x **LC1D80** (5)
45	80	70	–	–	–	**GV7RS100**	60…100	3 x **LC1D115** (6)
55	97	70	**55**	90	65	**GV7RS100**	60…100	3 x **LC1D115** (6)
75	132	70	**75**	125	65	**GV7RS150**	90…150	3 x **LC1D150** (6)
–	–	–	**90**	146	65	**GV7RS150**	90…150	3 x **LC1D150** (6)
90	160	70	**110**	178	65	**GV7RS220**	132…220	3 x **LC1F185** (7)
110	195	70	**132**	215	65	**GV7RS220**	132…220	3 x **LC1F225** (7)

*(1) The breaking performance of circuit breakers **GV2 P** can be increased by adding a current limiter **GV1 L3**, see page B6/54.*
*(2) For mounting 3 contactors **LC1 D09**, star-delta starter kit **LAD 91217** must be ordered separately, see page B8/23.*
*(3) For mounting 3 contactors **LC1 D18** or **LC1 D25**, star-delta starter kit **LAD 93217** must be ordered separately, see page B8/23.*
*(4) For mounting 3 contactors **LC1 D●●A**, star-delta starter kit **LAD 9SD3** must be ordered separately, see page B8/23.*
*(5) For mounting 3 contactors **LC1 D80**, star-delta starter kit **LA9 D8017** must be ordered separately, see page B8/23.*
*(6) For mounting 3 contactors **LC1 D115** or **LC1 D150**, see A2/15.*
*(7) For mounting 3 contactors **LC1 F185** or **LC1 F225**, see pages A2/17 and A2/19.*

TeSys motor starters - open version

Star-delta starters with circuit breaker and overload protection by separate thermal overload relay

1.5 to 315 kW at 400/415 V: type 1 coordination

Maximum operating rate: LC3 K and LC3 F: 12 starts/hour; LC3 D: 30 starts/hour.
Maximum starting time: LC3 K and LC3 D: 30 seconds; LC3 F: 20 seconds.

Standard power ratings of 3-phase motors 50/60 Hz in category AC-3								Circuit breaker			Star-delta contactors	Thermal overload relay	
400/415 V				440 V				Reference	Rating	Irm (2)	Reference	Reference	Setting range
P	Ie	IrD (1)	Iq	P	Ie	IrD (1)	Iq						
kW	A	A	kA	kW	A	A	kA		A	A			A
–	–	–	–	**1.5**	3.06	1.8	50	**LC3D32A**	4	51	**LC3K06**	**LR2K0308**	1.8…2.6
1.5	3.6	2	50	**2.2**	4.42	3	50						
2.2	4.9	3	50	**3**	5.77	3	50	**GV2LE10**	6.3	78	**LC3K06**	**LR2K0310**	2.6…3.7
3	6.5	4	50	–	–	–	–	**GV2LE14**	10	138	**LC3K06**	**LR2K0312**	3.7…5.5
–	–	–	–	**4**	7.9	5	50	**GV2LE10**	6.3	78	**LC3K06**	**LR2K0312**	3.7…5.5
4	8.5	5	50	–	–	–	–	**GV2LE14**	10	138	**LC3K06**	**LR2K0312**	3.7…5.5
–	–	–	–	**5.5**	10.4	6	15	**GV2LE14**	10	138	**LC3K06**	**LR2K0314**	5.5…8
5.5	11.5	6	15	–	–	–	–	**GV2LE16**	14	170	**LC3K06**	**LR2K0314**	5.5…8
–	–	–	–	**7.5**	13.7	8	8	**GV2LE16**	14	170	**LC3K09**	**LR2K0316**	8…11.5
7.5	15.5	9	15	–	–	–	–	**GV2LE20**	18	223	**LC3K09**	**LR2K0316**	8…11.5
–	–	–	–	**9**	16.9	1	8	**GV2LE16**	14	170	**LC3D12A**	**LRD16**	9…13
9	18.1	10	15	–	–	–	–	**GV2LE22**	25	327	**LC3K12**	**LR2K0316**	8…11.5
–	–	–	–	**11**	20.1	12	8	**GV2LE20**	18	223	**LC3K12**	**LR2K0321**	10…14
11	22	12	15	–	–	–	–	**GV2LE22**	25	327	**LC3K12**	**LR2K0321**	10…14
–	–	–	–	**15**	26.5	15	6	**GV2LE22**	25	327	**LC3D18A**	**LRD21**	12…18
15	29	16	10	–	–	–	–	**GV2LE32**	32	384	**LC3D18A**	**LRD21**	12…18
18.5	35	20	50	**18.5**	32.8	19	50	**GV3L40**	40	560	**LC3D18A**	**LRD22**	16…24
22	41	24	50	**22**	39	23	50	**GV3L50**	50	700	**LC3D32A**	**LRD32**	23…32
–	–	–	–	**30**	51.5	30	50	**GV3L65**	65	910	**LC3D32A**	**LRD32**	23…32
30	55	33	50	–	–	–	–	**GV3L65**	65	910	**LC3D32A**	**LRD35**	30…38
–	–	–	–	**37**	64	37	50	**GV3L65**	65	910	3 x **LC1D40A** (4)	**LRD340**	30…40
–	–	–	–	**45**	76	44	65	**NS80HMA**	80	640	2 x **LC1D50A** +1 x **LC1D40A** (4)	**LRD350**	37…50
–	–	–	–	**55**	90	52	65	**NS80HMA**	80	800	2 x **LC1D65A** +1 x **LC1D40A** (4)	**LRD365**	48…65
37	66	40	70	–	–	–	–	**NS80HMA**	80	640	3 x **LC1D40A** (4)	**LRD350**	37…50
–	–	–	–	**75**	125	72	(3)	**NSX160●MA** (3)	150	1200	**LC3D80**	**LRD3363**	63…80
45	80	47	(3)	–	–	–	–	**NSX100●MA** (3)	100	800	2 x **LC1D50A** +1 x **LC1D40A** (4)	**LRD350**	37…50
55	97	58	(3)	–	–	–	–	**NSX100●MA** (3)	100	1200	2 x **LC1D65A** +1 x **LC1D40A** (4)	**LRD365**	48…65
75	132	78	(3)	–	–	–	–	**NSX160●MA** (3)	150	1200	**LC3D80**	**LRD3363**	63…80
–	–	–	–	**90**	146	85	(3)	**NSX160●MA** (3)	150	1200	**LC3D115**	**LRD4365**	80…104
90	160	96	(3)	**110**	178	103	(3)	**NSX250●MA** (3)	220	1760	**LC3D115**	**LRD4365**	80…104
–	–	–	–	**132**	215	125	(3)	**NSX250●MA** (3)	220	1760	**LC3D150**	**LRD4369**	110…140
110	195	116	(3)	–	–	–	–	**NSX250●MA** (3)	220	1760	**LC3D115**	**LRD4367**	95…120
–	–	–	–	**160**	256	148	(3)	**NSX400●** + **Micrologic 1.3M** (3)	320	2240	**LC3D150**	**LR9D5369**	90…150
–	–	–	–	**200**	321	186	(3)	**NSX630●** + **Micrologic 1.3M** (3)	500	3150	**LC3F225**	**LR9F5371**	132…220
132	230	139	(3)	–	–	–	–	**NSX400●** + **Micrologic 1.3M** (3)	320	2240	**LC3D150**	**LRD4369**	110…140
160	280	165	(3)	–	–	–	–	**NSX400●** + **Micrologic 1.3M** (3)	320	2560	**LC3F185**	**LR9F5371**	132…220
200	350	204	(3)	**220**	353	204	(3)	**NSX630●** + **Micrologic 1.3M** (3)	500	3150	**LC3F225**	**LR9F5371**	132…220
220	388	225	(3)	**250**	401	233	(3)	**NSX630●** + **Micrologic 1.3M** (3)	500	3500	**LC3F265**	**LR9F7375**	200…330
280	480	278	(3)	–	–	–	–	**NSX630●** + **Micrologic 1.3M** (3)	500	4000	**LC3F330**	**LR9F7375**	200…330
–	–	–	–	**315**	505	295	(3)	**NSX800●** + **Micrologic 5.0 - LR off**	800	4000	**LC3F330**	**LR9F7375**	200…330
315	540	322	(3)	**355**	518	300	(3)	**NSX800●** + **Micrologic 5.0 - LR off**	800	4500	**LC3F330**	**LR9F7375**	200…330
–	–	–	–	**375**	575	334	(3)	**NSX800●** + **Micrologic 5.0 - LR off**	800	5000	**LC3F400**	**LR9F7379**	300…500

(1) IrD: current in the motor windings in delta connection.
(2) Irm: setting current of the magnetic trip.
(3) Products marketed under the Merlin Gerin brand. Reference to be completed by replacing the ● with the breaking performance code:

Breaking performance Iq (kA)	NSX100●MA		NSX160●MA, NSX250●MA		NSX400●, NSX630●		NS800●	
400/415 V	36	70	36	70	70	150	70	150
440 V	35	65	35	65	65	130	65	130
Code	**F**	**H**	**F**	**H**	**H**	**L**	**H**	**L**

*(4) For mounting 3 contactors **LC1 D●●A**, star-delta starter kit **LAD 9SD3** must be ordered separately, see page B8/23.*

TeSys motor starters - open version

Star-delta starters with circuit breaker and overload protection by separate thermal overload relay

1.5 to 250 kW at 400/415 V: type 2 coordination

Maximum operating rate: LC3 D: 30 starts/hour; LC3 F: 12 starts/hour.
Maximum starting time: LC3 D: 30 seconds; LC3 F: 20 seconds.

Standard power ratings of 3-phase motors 50/60 Hz in category AC-3						Circuit breaker			Star-delta contactors	Thermal overload relay	
400/415 V			440 V			Reference	Rating	Irm (1)	Reference	Reference	Setting range
P	Ie	Iq	P	Ie	Iq						
kW	A	kA	kW	A	kA		A	A			A
1.5	3.6	130	1.5	3.06	130	GV2L08	4	51	3 x LC1D09	LRD08	2.5…4
2.2 3	4.9 6.5	130 130	2.2 3	4.42 5.77	130 130	GV2L10	6.3	78	3 x LC1D09	LRD10	4…6
–	–	–	4	7.9	20	GV2L14	10	138	3 x LC1D18	LRD14	7…10
4	8.5	130	–	–	–	GV2L14	10	138	3 x LC1D18	LRD16	9…13
5.5	11.5	50	5.5	10.4	20	GV2L16	14	170	3 x LC1D25	LRD16	9…13
7.5	15.5	50	7.5	13.7	20	GV2L20	18	223	3 x LC1D25	LRD21	12…18
–	–	–	9	16.9	20	GV2L22	25	327	3 x LC1D25	LRD21	12…18
9 11	18.1 22	50 50	– 11	– 20.1	– 20	GV2L22	25	327	3 x LC1D25	LRD22	16…24
15	29	50	15	26.5	50	GV3L32	32	448	3 x LC1D40A (2)	LRD332	23…32
18.5	35	50	–	–	–	GV3L40	40	560	2 x LC1D50A +1 x LC1D40A (2)	LRD340	30…40
–	–	–	18.5	32.8	50	GV3L40	40	560	2 x LC1D65A +1 x LC1D40A (2)	LRD340	30…40
22	41	50	–	–	–	GV3L50	50	700	2 x LC1D50A +1 x LC1D40A (2)	LRD350	37…50
–	–	–	22	39	50	GV3L50	50	700	2 x LC1D65A +1 x LC1D40A (2)	LRD350	37…50
30	55	50	30	51.5	50	GV3L65	65	910	2 x LC1D65A +1 x LC1D40A (2)	LRD365	48…65
–	–	–	37	64	50	GV3L65	65	910	3 x LC1D80	LRD3359	48…65
37	66	70	45	76	65	NS80HMA	80	640	3 x LC1D80	LRD3363	63…80
45	80	(3)	55	90	(3)	NSX100●MA (3)	100	800	3 x LC1D115	LR9D5367	60…100
55	97	(3)	–	–	–	NSX160●MA (3)	150	1200	3 x LC1D115	LR9D5369	90…150
–	–	–	75	125	(3)	NSX160●MA (3)	150	1200	3 x LC1D150	LR9D5369	90…150
75	132	(3)	90	146	(3)	NSX160●MA (3)	150	1200	3 x LC1D150	LR9D5369	90…150
90	160	(3)	110	178	(3)	NSX250●MA (3)	220	1760	3 x LC1F185	LR9F5371	132…220
110	195	(3)	–	–	–	NSX250●MA (3)	220	1760	3 x LC1F225	LR9F5371	132…220
–	–	–	132	215	(3)	NSX250●MA (3)	220	1760	3 x LC1F225	LR9F7375	200…330
132	230	(3)	160	256	(3)	NSX400● + Micrologic 1.3M (3)	320	2240	3 x LC1F265	LR9F7375	200…330
160	280	(3)	–	–	–	NSX400● + Micrologic 1.3M (3)	320	2560	3 x LC1F330	LR9F7375	200…330
–	–	–	200	321	(3)	NSX400● + Micrologic 1.3M (3)	320	2880	3 x LC1F330	LR9F7379	300…500
200	350	(3)	220	353	(3)	NSX630● + Micrologic 1.3M (3)	500	3150	3 x LC1F400	LR9F7379	300…500
220	388	(3)	250	401	(3)	NSX630● + Micrologic 1.3M (3)	500	3500	3 x LC1F400	LR9F7379	300…500
250	430	(3)	–	–	–	NSX630● + Micrologic 1.3M (3)	500	4000	3 x LC1F500	LR9F7379	300…500

(1) Irm: setting current of the magnetic trip.
*(2) For mounting 3 contactors **LC1 D●●A**, star-delta starter kit **LAD 9SD3** must be ordered separately, see page B8/23.*
(3) Products marketed under the Merlin Gerin brand. Reference to be completed by replacing the ● with the breaking performance code:

Breaking performance Iq (kA)	NSX100●MA		NSX160●MA, NSX250●MA		NSX400●, NSX630●	
400/415 V	36	70	36	70	70	150
440 V	35	65	35	65	65	130
Code	F	H	F	H	H	L

Contactor utilisation categories conforming to IEC 60947-1

The standard utilisation categories define the current values which the contactor must be able to make or break.

These values depend on:
- the type of load being switched: squirrel cage or slip ring motor, resistors,
- the conditions under which making or breaking takes place: motor stalled, starting or running, reversing, plugging.

a.c. applications

Category AC-1	This category applies to all types of a.c. load with a power factor equal to or greater than 0.95 ($\cos \varphi \geq 0.95$). Application examples: heating, distribution.
Category AC-2	This category applies to starting, plugging and inching of slip ring motors. ■ On closing, the contactor makes the starting current, which is about 2.5 times the rated current of the motor. ■ On opening, it must break the starting current, at a voltage less than or equal to the mains supply voltage.
Category AC-3	This category applies to squirrel cage motors with breaking during normal running of the motor. ■ On closing, the contactor makes the starting current, which is about 5 to 7 times the rated current of the motor. ■ On opening, it breaks the rated current drawn by the motor. Application examples: all standard squirrel cage motors: lifts, escalators, conveyor belts, bucket elevators, compressors, pumps, mixers, air conditioning units, etc... .
Category AC-4	This category covers applications with plugging and inching of squirrel cage and slip ring motors. The contactor closes at a current peak which may be as high as 5 or 7 times the rated motor current. On opening it breaks this same current at a voltage which is higher, the lower the motor speed. This voltage can be the same as the mains voltage. Breaking is severe. Application examples: printing machines, wire drawing machines, cranes and hoists, metallurgy industry.

d.c. applications

Category DC-1	This category applies to all types of d.c. load with a time constant (L/R) of less than or equal to 1 ms.
Category DC-3	This category applies to starting, counter-current braking and inching of shunt motors. Time constant ≤ 2 ms. ■ On closing, the contactor makes the starting current, which is about 2.5 times the rated motor current. ■ On opening, the contactor must be able to break 2.5 times the starting current at a voltage which is less than or equal to the mains voltage. The slower the motor speed, and therefore the lower its back e.m.f., the higher this voltage. Breaking is difficult.
Category DC-5	This category applies to starting, counter-current braking and inching of series wound motors. Time constant ≤ 7.5 ms. On closing, the contactor makes a starting current peak which may be as high as 2.5 times the rated motor current. On opening, the contactor breaks this same current at a voltage which is higher, the lower the motor speed. This voltage can be the same as the mains voltage. Breaking is severe.

Utilisation categories for auxiliary contacts & control relays conforming to IEC 60947-1

a.c. applications

Category AC-14 (1)	This category applies to the switching of electromagnetic loads whose power drawn with the electromagnet closed is less than 72 VA. Application example: switching the operating coil of contactors and relays.
Category AC-15 (1)	This category applies to the switching of electromagnetic loads whose power drawn with the electromagnet closed is more than 72 VA. Application example: switching the operating coil of contactors.

d.c. applications

Category DC-13 (2)	This category applies to the switching of electromagnetic loads for which the time taken to reach 95 % of the steady state current (T = 0.95) is equal to 6 times the power P drawn by the load (with P ≤ 50 W). Application example: switching the operating coil of contactors without economy resistor.

(1) Replaces category AC-11.
(2) Replaces category DC-11.

TeSys contactors
Definitions and comments

Coordination and standards

Definitions

Altitude

The rarefied atmosphere at high altitude reduces the dielectric strength of the air and hence the rated operational voltage of the contactor. It also reduces the cooling effect of the air and hence the rated operational current of the contactor (unless the temperature drops at the same time).

No derating is necessary up to 3000 m.

Derating factors to be applied above this altitude for main pole operational voltage and current (a.c. supply) are as follows.

Altitude	3500 m	4000 m	4500 m	5000 m
Rated operetional voltage	0.90	0.80	0.70	0.60
Rated operational current	0.92	0.90	0.88	0.86

Ambient air temperature

The temperature of the air surrounding the device, measured near to the device.
The operating characteristics are given:
- with no restriction for temperatures between -5 and +55 °C,
- with restrictions, if necessary, for temperatures between -50 and +70 °C.

Rated operational current (Ie)

This is defined taking into account the rated operational voltage, operating rate and duty, utilisation category and ambient temperature around the device.

Rated conventional thermal current (Ith) (1)

The current which a closed contactor can sustain for a minimum of 8 hours without its temperature rise exceeding the limits given in the standards.

Permissible short time rating

The current which a closed contactor can sustain for a short time after a period of no load, without dangerous overheating.

Rated operational voltage (Ue)

This is the voltage value which, in conjunction with the rated operational current, determines the use of the contactor or starter, and on which the corresponding tests and the utilisation category are based. For 3-phase circuits it is expressed as the voltage between phases.
Apart from exceptional cases such as rotor short-circuiting, the rated operational voltage Ue is less than or equal to the rated insulation voltage Ui.

Rated control circuit voltage (Uc)

The rated value of the control circuit voltage, on which the operating characteristics are based. For a.c. applications, the values are given for a near sinusoidal wave form (less than 5 % total harmonic distortion).

Rated insulation voltage (Ui)

This is the voltage value used to define the insulation characteristics of a device and referred to in dielectric tests determining leakage paths and creepage distances. As the specifications are not identical for all standards, the rated value given for each of them is not necessarily the same.

Rated impulse withstand voltage (Uimp)

The peak value of a voltage surge which the device is able to withstand without breaking down.

Rated operational power (expressed in kW)

The rated power of the standard motor which can be switched by the contactor, at the stated operational voltage.

Rated breaking capacity (2)

This is the current value which the contactor can break in accordance with the breaking conditions specified in the IEC standard.

Rated making capacity (2)

This is the current value which the contactor can make in accordance with the making conditions specified in the IEC standard.

On-load factor (m)

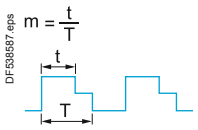

This is the ratio between the time the current flows (t) and the duration of the cycle (T).
Cycle duration: duration of current flow + time at zero current.

Pole impedance

The impedance of one pole is the sum of the impedance of all the circuit components between the input terminal and the output terminal.
The impedance comprises a resistive component (R) and an inductive component ($X = L\omega$).
The total impedance therefore depends on the frequency and is normally given for 50 Hz.
This average value is given for the pole at its rated operational current.

Electrical durability

This is the average number of on-load operating cycles which the main pole contacts can perform without maintenance. The electrical durability depends on the utilisation category, the rated operational current and the rated operational voltage.

Mechanical durability

This is the average number of no-load operating cycles (i.e. with zero current flow through the main poles) which the contactor can perform without mechanical failure.

(1) Conventional thermal current, in free air, conforming to IEC standards.
(2) For a.c. applications, the breaking and making capacities are expressed by the rms value of the symmetrical component of the short-circuit current. Taking into account the maximum asymmetry which may exist in the circuit, the contacts therefore have to withstand a peak asymmetrical current which may be twice the rms symmetrical component.
***Note:** these definitions are extracted from standard IEC 60947-1.*

TeSys contactors
For utilisation category AC-3

Coordination and standards

Operational current and power conforming to IEC ($\theta \leq 60$ °C)

Contactor size			LC1/ LP1 K06	LC1/ LP1 K09	LC1 K12	LC1 K16	LC1 D09	LC1 D12	LC1 D18	LC1 D25	LC1 D32	LC1 D38	LC1 D40A
Maximum operational current in AC-3	≤ 440 V	**A**	6	9	12	16	9	12	18	25	32	38	40
Rated operational power P (standard motor power ratings)	220/240 V	**kW**	1.5	2.2	3	3	2.2	3	4	5.5	7.5	9	11
	380/400 V	**kW**	2.2	4	5.5	7.5	4	5.5	7.5	11	15	18.5	18.5
	415 V	**kW**	2.2	4	5.5	7.5	4	5.5	9	11	15	18.5	22
	440 V	**kW**	3	4	5.5	7.5	4	5.5	9	11	15	18.5	22
	500 V	**kW**	3	4	4	5.5	5.5	7.5	10	15	18.5	18.5	22
	660/690 V	**kW**	3	4	4	4	5.5	7.5	10	15	18.5	18.5	30
	1000 V	**kW**	–	–	–	–	–	–	–	–	–	–	–

Maximum operating rate in operating cycles/hour (1)

On-load factor	Operational power	LC1 D09	LC1 D12	LC1 D18	LC1 D25	LC1 D32	LC1 D38	LC1 D40A
≤ 85 %	P	1200	1200	1200	1200	1000	1000	1000
	0.5 P	3000	3000	2500	2500	2500	2500	2500
≤ 25 %	P	1800	1800	1800	1800	1200	1200	1200

Operational current and power conforming to UL, CSA ($\theta \leq 60$ °C)

Contactor size			LC1/ LP1 K06	LC1/ LP1 K09	LC1/ LP1 K12	LC1 D09	LC1 D12	LC1 D18	LC1 D25	LC1 D32	LC1 D38	LC1 D40A
Maximum operational current in AC-3	≤ 440 V	**A**	6	9	12	9	12	18	25	32	–	40
Rated operational power P (standard motor power ratings 60 Hz)	200/208 V	**HP**	1.5	2	3	2	3	5	7.5	10	–	10
	230/240 V	**HP**	1.5	3	3	2	3	5	7.5	10	–	10
	460/480 V	**HP**	3	5	7.5	5	7.5	10	15	20	–	30
	575/600 V	**HP**	3	5	10	7.5	10	15	20	25	–	30

(1) Depending on the operational power and the on-load factor ($\theta \leq 60$ °C).
(2) Other values: please contact us.

Characteristics: pages B8/55 to B8/60
References: pages B8/2 to B8/7
Dimensions, Schemes: pages B8/67 to B8/72

TeSys contactors
For utilisation category AC-3

Coordination and standards

LC1 D50A	LC1 D65A	LC1 D80	LC1 D95	LC1 D115	LC1 D150	LC1 F185	LC1 F225	LC1 F265	LC1 F330	LC1 F400	LC1 F500	LC1 F630	LC1 F780	LC1 F800	LC1 F1000 (2)	LC1 BL	LC1 BM	LC1 BP	LC1 BR
50	65	80	95	115	150	185	225	265	330	400	500	630	780	800		750	1000	1500	1800
15	18,5	22	25	30	40	55	63	75	100	110	147	200	220	250		220	280	425	500
22	30	37	45	55	75	90	110	132	160	200	250	335	400	450		400	500	750	900
25	37	45	45	59	80	100	110	140	180	220	280	375	425	450		425	530	800	900
30	37	45	45	59	80	100	110	140	200	250	295	400	425	450		450	560	800	900
30	37	55	55	75	90	110	129	160	200	257	355	400	450	450		500	600	750	900
33	37	45	45	80	100	110	129	160	220	280	335	450	475	475		560	670	750	900
–	–	45	45	65	75	100	100	147	160	185	335	450	450	450		530	530	670	750

LC1 D50A	LC1 D65A	LC1 D80	LC1 D95	LC1 D115	LC1 D150	LC1 F185	LC1 F225	LC1 F265	LC1 F330	LC1 F400	LC1 F500	LC1 F630	LC1 F780	LC1 F800	LC1 F1000 (2)	LC1 BL	LC1 BM	LC1 BP	LC1 BR
1000	1000	750	750	750	750	750	750	750	750	500	500	500	500	500		120	120	120	120
2500	2500	2000	2000	2000	1200	2000	2000	2000	2000	1200	1200	1200	1200	600		120	120	120	120
1200	1200	1200	1200	1200	1200	1200	1200	1200	1200	1200	1200	1200	600	600		120	120	120	120

LC1 D50A	LC1 D65A	LC1 D80	LC1 D95	LC1 D115	LC1 D150	LC1 F185	LC1 F225	LC1 F265	LC1 F330	LC1 F400	LC1 F500	LC1 F630	LC1 F780	LC1 F800	LC1 F1000 (2)
50	65	80	95	115	150	185	225	265	330	400	500	630	780	800	1000
15	20	30	30	30	40	50	60	60	75	100	150	250	–	350	–
15	20	30	30	40	50	60	75	75	100	125	200	300	450	400	–
40	40	60	60	75	100	125	150	150	200	250	400	600	900	900	–
40	50	60	60	100	125	150	150	200	250	300	500	800	–	900	–

TeSys contactors
For utilisation category AC-3

Coordination and standards

Selection according to required electrical durability, in category AC-3 (Ue ≤ 440 V)

Control of 3-phase asynchronous squirrel cage motors with breaking whilst running.
The current broken (Ic) in category AC-3 is equal to the rated operational current (Ie) of the motor.

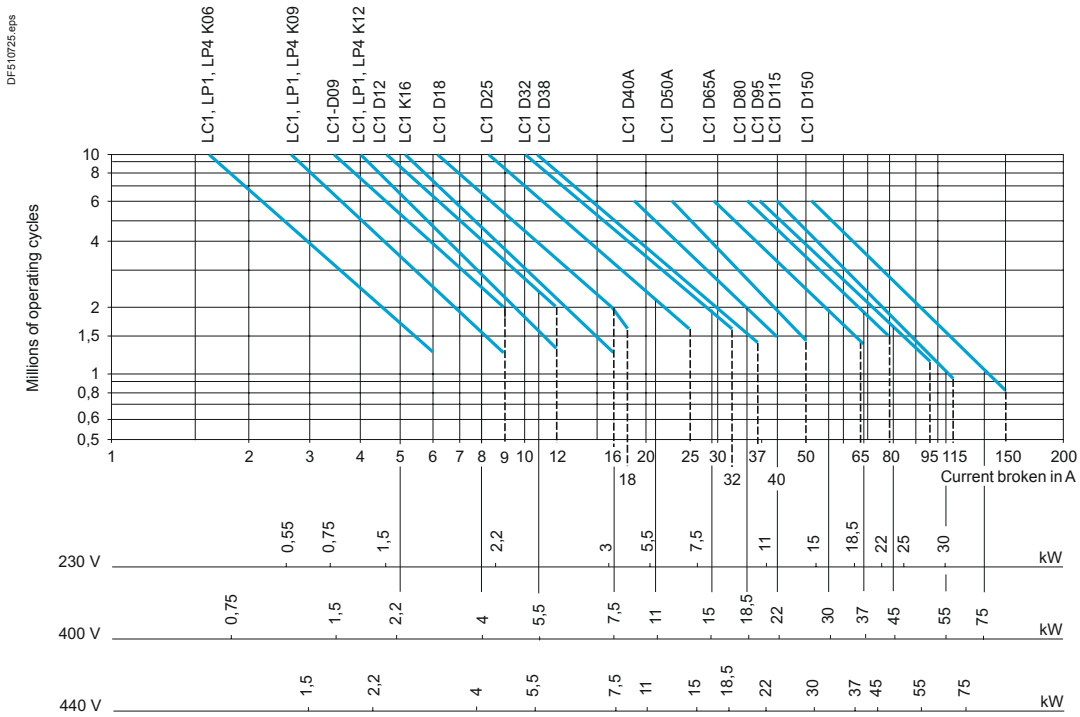

Operational power in kW-50 Hz.
Example:
Asynchronous motor with P = 5.5 kW - Ue = 400 V - Ie = 11 A - Ic = Ie = 11 A
or asynchronous motor with P = 5.5 kW - Ue = 415 V - Ie = 11 A - Ic = Ie = 11 A
3 million operating cycles required.
The above selection curves show the contactor rating needed: LC1 D18.

Selection according to required electrical durability, in category AC-3 (Ue = 660/690 V) (1)

Control of 3-phase asynchronous squirrel cage motors with breaking whilst running.
The current broken (Ic) in category AC-3 is equal to the rated operational current (Ie) of the motor.

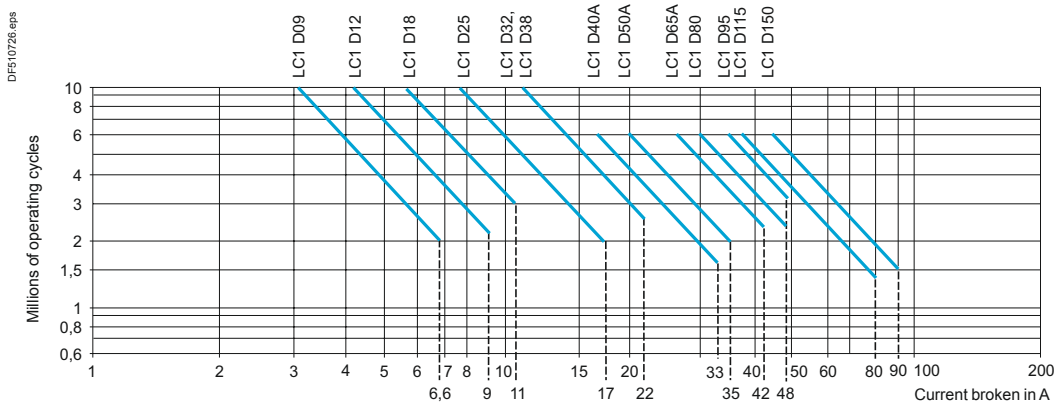

(1) For Ue = 1000 V, use the 660/690 V curves, but do not exceed the operational current at the operational power indicated for 1000 V.

Characteristics: pages B8/55 to B8/60
References: pages B8/2 to B8/7
Dimensions, Schemes: pages B8/67 to B8/72

TeSys contactors
For utilisation category AC-3

Coordination and standards

Selection according to required electrical durability, in category AC-3 (Ue ≤ 440 V)

Control of 3-phase asynchronous squirrel cage motors with breaking whilst running.
The current broken (Ic) in category AC-3 is equal to the rated operational current (Ie) of the motor.

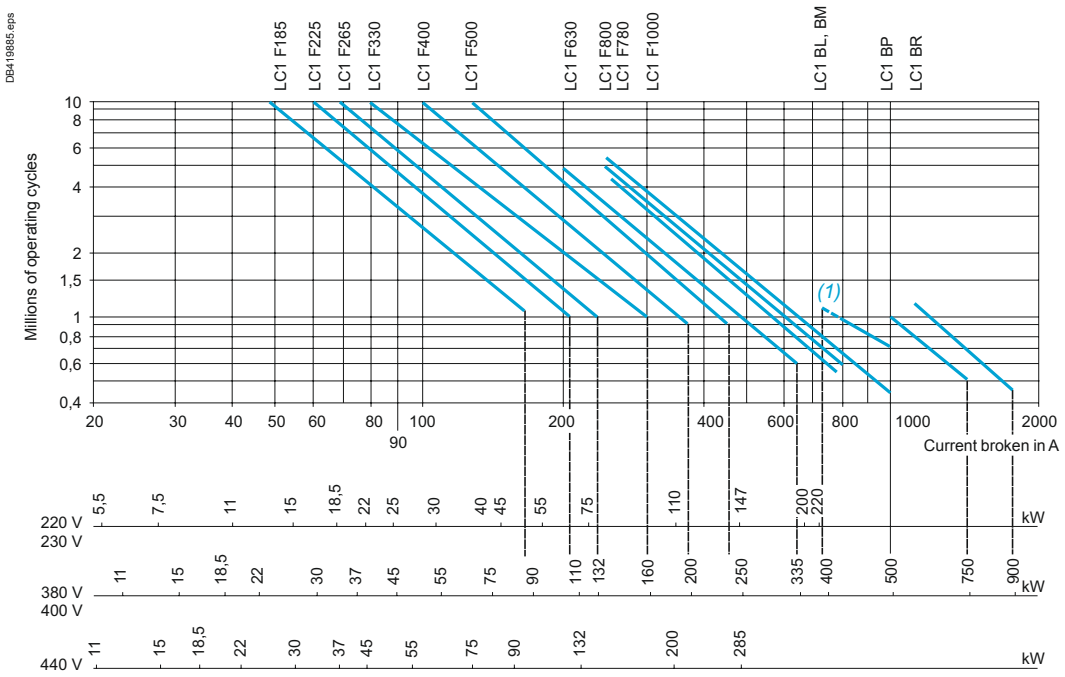

Operational power in kW-50 Hz.

Example:

Asynchronous motor with P = 132 kW - Ue = 380 V - Ie = 245 A - Ic = Ie = 245 A
or asynchronous motor with P = 132 kW - Ue = 415 V - Ie = 240 A - Ic = Ie = 240 A
1.5 million operating cycles required.
The above selection curves show the contactor rating needed: LC1 F330.

(1) The dotted lines are only applicable to LC1 BL contactors.

Selection according to required electrical durability, in category AC-3 (Ue = 660/690 V)

Control of 3-phase asynchronous squirrel cage motors with breaking whilst running.
The current broken (Ic) in category AC-3 is equal to the rated operational current (Ie) of the motor.

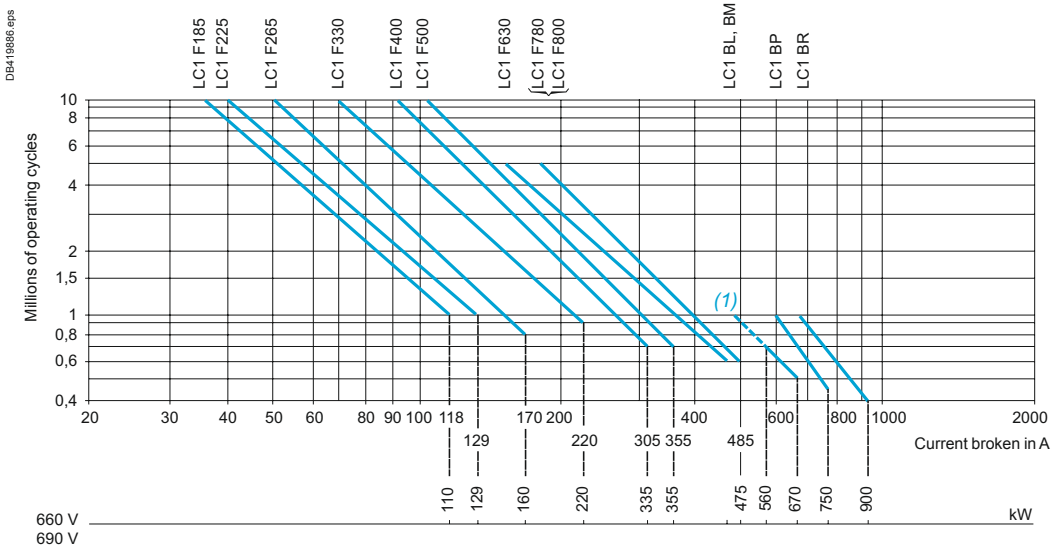

Example:

Asynchronous motor with P = 132 kW - Ue = 660 V - Ie = 140 A - Ic = Ie = 140 A
1.5 million operating cycles required.
The above selection curves show the contactor rating needed: LC1 F330.

(1) The dotted lines are only applicable to LC1 BL contactors.

Coordination and standards

TeSys contactors
For utilisation category AC-1

Coordination and standards

Maximum operational current (open-mounted device)

Contactor size			LC1/ LP1 K09	LC1/ LP1 K12	LC1 D09	LC1 DT20	LC1 D12 DT25	LC1 D18 DT32	LC1 D25 DT40	LC1 D32	LC1 D38	LC1 D40A DT60A	LC1 D50A
Maximum operating rate in operating cycles/hour			600	600	600	600	600	600	600	600	600	600	600
Connection conforming to IEC 60947-1	Cable c.s.a.	mm²	4	4	4	4	4	6	6	10	10	35	35
	Bar c.s.a.	mm	–	–	–	–	–	–	–	–	–	–	–
Operational current in AC-1 in A, according to the ambient temperature conforming to IEC 60947-1	≤ 40 °C	A	20	20	25	20	25	32	40	50	50	60	80
	≤ 60 °C	A	20	20	25	20	25	32	40	50	50	60	80
	≤ 70 °C	A (at UC)	(1)	(1)	17	(1)	17	22	28	35	35	42	56
Maximum operational power ≤ 60 °C	220/230 V	kW	8	8	9	8	9	11	14	18	18	21	29
	240 V	kW	8	8	9	8	9	12	15	19	19	23	31
	380/400 V	kW	14	14	15	14	15	20	25	31	31	37	50
	415 V	kW	14	14	17	14	17	21	27	34	34	41	54
	440 V	kW	15	15	18	15	18	23	29	36	36	43	58
	500 V	kW	17	17	20	17	20	23	33	41	41	49	65
	660/690 V	kW	22	22	27	22	27	34	43	54	54	65	80
	1000 V	kW	–	–	–	–	–	–	–	–	–	–	–

(1) Please consult your Regional Sales Office
(2) With set of right-angled connectors LA9F2100
(3) With set of right-angled connectors LA9F2600

Increase in operational current by parallel connection of poles

Apply the following coefficients to the currents or power values given above; these coefficients take into account an often unbalanced current distribution between the poles:

- 2 poles in parallel: K = 1.6
- 3 poles in parallel: K = 2.25
- 4 poles in parallel: K = 2.8

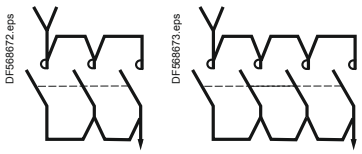

Selection according to required electrical durability, in category AC-1 (Ue ≤ 690 V)

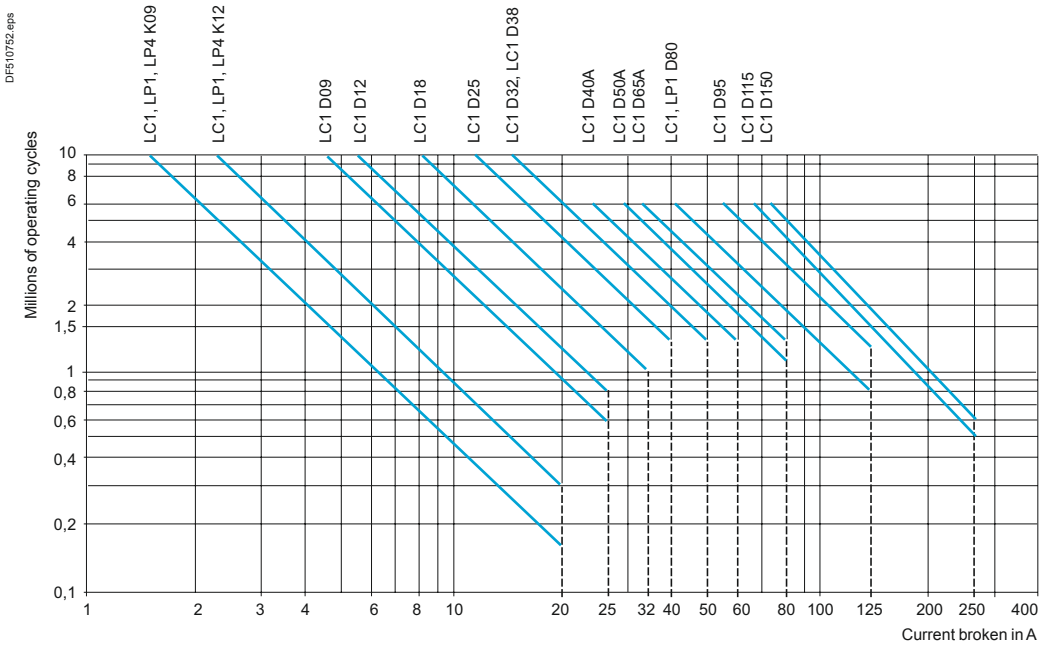

Control of resistive circuits (cos ϕ ≥ 0.95).
The current broken (Ic) in category AC-1 is equal to the current (Ie) normally drawn by the load.

Example:

- Ue = 220 V - Ie = 50 A θ ≤ 40 °C - Ic = Ie = 50 A
- 2 million operating cycles required
- the above selection curves show the contactor rating needed: either LC1 or LP1 D50.

Characteristics: pages B8/55 to B8/60
References: pages B8/2 to B8/7
Dimensions, Schemes: pages B8/67 to B8/72

TeSys contactors
For utilisation category AC-1

Coordination and standards

LC1 D65A DT80A	LC1/ LP1 D80	LC1 D95	LC1 D115	LC1 D150	LC1 F185	LC1 F225	LC1 F265	LC1 F330	LC1 F400	LC1 F500	LC1 F630	LC1 F780	LC1 F800	LC1 F1000 (1)	LC1 F1250	LC1 F1400	LC1 F1700	LC1 F2100	LC1 F2600	LC1 BL	LC1 BM	LC1 BP	LC1 BR
600	600	600	600	600	600	600	600	600	600	600	600	600	600		300	200	200	200	200	120	120	120	120
35	50	50	120	120	150	185	185	240	–	–	–	–	–		–	–	–	–	–	–	–	–	–
–	–	–	–	–	–	–	–	–	2 30 x 5	2 40 x 5	2 60 x 5	2 100 x 5	2 60 x 5		2 100 x 5	2 100 x 5	3 100 x 5	4 100 x 5	3 100 x 10	2 50 x 5	2 80 x 5	2 100 x 5	2 100 x 10
80	125	125	250	250	275	315	350	400	500	700	1000	1600	1000		1260	1400	1700	2100 (2)	2600	800	1250	2000	2750
80	125	125	200	200	275	280	300	360	430	580	850	1350	850		1060	1190	1450	1750	2600 (3)	700	1100	1750	2400
56	80	80	160	160	180	200	250	290	340	500	700	1100	700		–	–	–	–	–	600	900	1500	2000
29	45	45	80	80	90	100	120	145	170	240	350	550	350		420	474	570	700	840	300	425	700	1000
31	49	49	83	83	100	110	125	160	180	255	370	570	370		440	490	600	780	920	330	450	800	1100
50	78	78	135	135	165	175	210	250	300	430	600	950	600		730	820	1000	1200	1450	500	800	1200	1600
54	85	85	140	140	170	185	220	260	310	445	630	1000	630		760	850	1050	1300	1580	525	825	1250	1700
58	90	90	150	150	180	200	230	290	330	470	670	1050	670		810	910	1100	1350	1680	550	850	1400	2000
65	102	102	170	170	200	220	270	320	380	660	750	1200	750		920	1000	1250	1550	1910	600	900	1500	2100
80	135	135	235	235	280	300	370	400	530	740	1000	1650	1000		1260	1400	1700	2100	2520	800	1100	1900	2700
–	120	120	345	345	410	450	540	640	760	950	1500	2400	1500		1840	2100	2500	3100	3820	1100	1700	3000	4200

Selection according to required electrical durability, in category AC-1 (Ue ≤ 690 V)

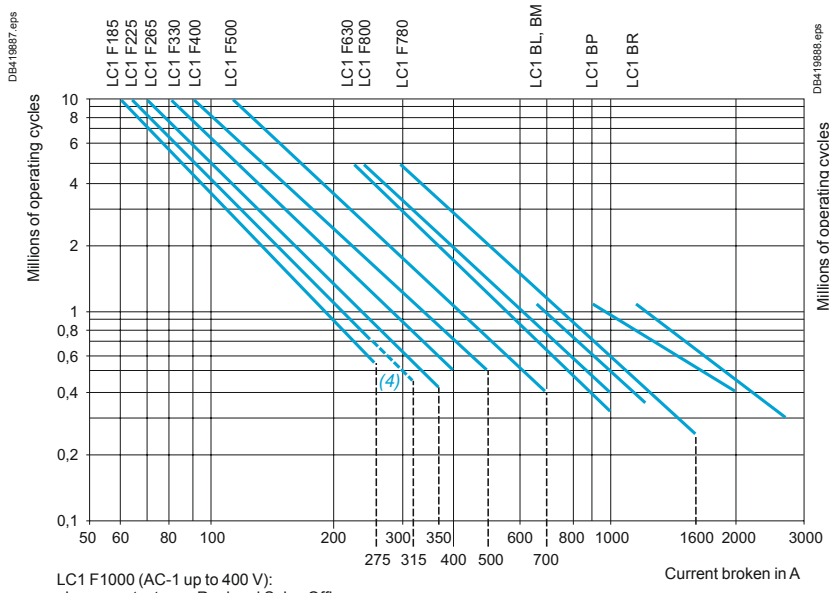

LC1 F1000 (AC-1 up to 400 V):
please contact your Regional Sales Office.

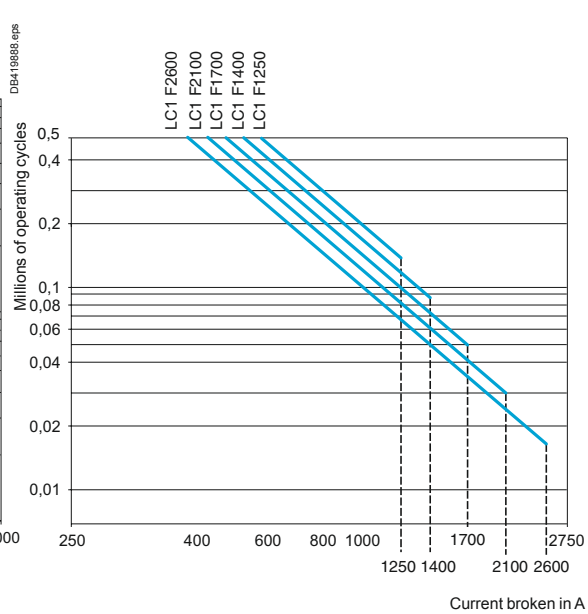

Example:

- Ue = 220 V - Ie = 500 A - θ ≤ 40 °C - Ic = Ie = 500 A
- 2 million operating cycles required
- the above selection curves show the contactor rating needed: LC1 F780.

(1) Please consult your Regional Sales Office
(2) With set of right-angled connectors LA9F2100
(3) With set of right-angled connectors LA9F2600
*(4) The dotted lines are only applicable to **LC1 F225**.*

TeSys contactors
For utilisation categories AC-2 or AC-4

Coordination and standards

Maximum breaking current

Category AC-2: slip ring motors - breaking the starting current.
Category AC-4: squirrel cage motors - breaking the starting current.

Contactor size			LC1/ LP1 K06	LC1/ LP1 K09	LC1/ LP1 K12	LC1 D09	LC1 D12	LC1 D18	LC1 D25	LC1 D32	LC1 D38	LC1 D40A
In category AC-4 (Ie max)	Ue ≤ 440 V Ie max broken = 6 x I motor	**A**	36	54	54	54	72	108	150	192	192	240
	440 V < Ue ≤ 690 V Ie max broken = 6 x I motor	**A**	26	40	40	40	50	70	90	105	105	150
Depending on the maximum operating rate (1) and the on-load factor, θ ≤ 60 °C (2)												
From 150 and 15 % to 300 and 10 %		**A**	20	30	30	30	40	45	75	80	80	110
From 150 and 20 % to 600 and 10 %		**A**	18	27	27	27	36	40	67	70	70	96
From 150 and 30 % to 1200 and 10 %		**A**	16	24	24	24	30	35	56	60	60	80
From 150 and 55 % to 2400 and 10 %		**A**	13	19	19	19	24	30	45	50	50	62
From 150 and 85 % to 3600 and 10 %		**A**	10	16	16	16	21	25	40	45	45	53

(1) Do not exceed the maximum number of operating cycles.
(2) For temperatures higher than 60 °C, use a maximum operating rate value equal to 80 % of the actual value when selecting from the tables.

Counter current braking (plugging)

The current varies from the maximum plug-braking current to the rated motor current.
The making current must be compatible with the rated making and breaking capacities of the contactor.

As breaking normally takes place at a current value at or near the locked rotor current, the contactor can be selected using the criteria for categories AC-2 and AC-4.

Permissible AC-4 power rating for 200 000 operating cycles

Operational voltage		LC●/ LP● K06	LC●/ LP● K09	LC● LP● K12	LC● D09	LC● D12	LC● D18	LC● D25	LC● D32	LC● D38	LC● D40A
220/230 V	**kW**	0.75	1.1	1.1	1.5	1.5	2.2	3	4	4	4
380/400 V	**kW**	1.5	2.2	2.2	2.2	3.7	4	5.5	7.5	7.5	9
415 V	**kW**	1.5	2.2	2.2	2.2	3	3.7	5.5	7.5	7.5	9
440 V	**kW**	1.5	2.2	2.2	2.2	3	3.7	5.5	7.5	7.5	11
500 V	**kW**	2.2	3	3	3	4	5.5	7.5	9	9	11
660/690 V	**kW**	3	4	4	4	5.5	7.5	10	11	11	15

Characteristics: pages B8/55 to B8/60
References: pages B8/2 to B8/7
Dimensions, Schemes: pages B8/67 to B8/72

TeSys contactors
For utilisation categories AC-2 or AC-4

LC1 D50A	LC1 D65A	LC1 D80	LC1 D95	LC1 D115	LC1 D150	LC1 F185	LC1 F225	LC1 F26	LC1 F330	LC1 F40	LC1 F500	LC1 F630	LC1 F780	LC1 F800	LC1 BL	LC1 BM	LC1 BP	LC1 BR
300	390	480	570	630	830	1020	1230	1470	1800	2220	2760	3360	4260	3690	4320	5000	7500	9000
170	210	250	250	540	640	708	810	1020	1410	1830	2130	2760	2910	2910	4000	4800	5400	6600
140	160	200	200	280	310	380	420	560	670	780	1100	1400	1600	1600	2250	3000	4500	5400
120	148	170	170	250	280	350	400	500	600	700	950	1250	1400	1400	2000	2400	3750	5000
100	132	145	145	215	240	300	330	400	500	600	750	950	1100	1100	1500	2000	3000	3600
80	110	120	120	150	170	240	270	320	390	450	600	720	820	820	1000	1500	2000	2500
70	90	100	100	125	145	170	190	230	290	350	500	660	710	710	750	1000	1500	1800

LC● D50A	LC● D65A	LC● D80	LC● D95	LC1 D115	LC1 D150	LC1 F185	LC1 F225	LC1 F265	LC1 F330	LC1 F400	LC1 F500	LC1 F630	LC1 F780	LC1 F800	LC1 BL	LC1 BM	LC1 BP	LC1 BR
5.5	7.5	7.5	9	9	11	18.5	22	28	33	40	45	55	63	63	90	110	150	200
11	11	15	15	18.5	22	33	40	51	59	75	80	100	110	110	160	160	220	250
11	11	15	15	18.5	22	37	45	55	63	80	90	100	110	110	160	160	250	280
11	15	15	15	18.5	22	37	45	59	63	80	100	110	132	132	160	200	250	315
15	15	22	22	30	37	45	55	63	75	90	110	132	150	150	180	200	250	355
15	18.5	25	25	30	45	63	75	90	110	129	140	160	185	185	200	250	315	450

TeSys contactors
For utilisation categories AC-2 or AC-4

Coordination and standards

Selection according to required electrical durability, in categories AC-2 or AC-4 (Ue ≤ 440 V)

Control of 3-phase asynchronous squirrel cage motors (AC-4) or slip ring motors (AC-2) with breaking whilst motor stalled.
The current broken (Ic) in AC-2 is equal to 2.5 x Ie.
The current broken (Ic) in AC-4 is equal to 6 x Ie (Ie = rated operational current of the motor).

DF537520.eps

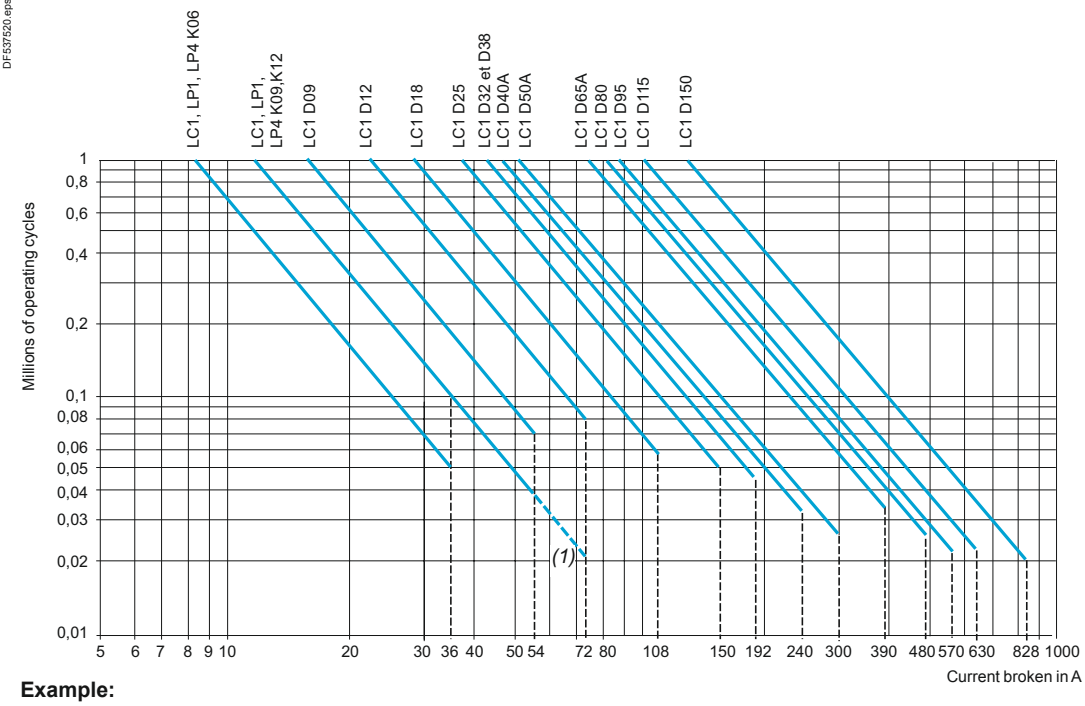

Example:

- asynchronous motor with P = 5.5 kW - Ue = 400 V - Ie = 11 A. Ic = 6 x Ie = 66 A
- or asynchronous motor with P = 5.5 kW - Ue = 415 V - Ie = 11 A. Ic = 6 x Ie = 66 A
- 200 000 operating cycles required
- the above selection curves show the contactor rating needed: LC1 D25.

(1) The dotted lines are only applicable to LC1, LP1 K12 contactors.

Selection according to required electrical durability, use in category AC-4 (440 V < Ue ≤ 690 V)

Control of 3-phase asynchronous squirrel cage motors with breaking whilst motor stalled.
The current broken (Ic) in AC-2 is equal to 2.5 x Ie.
The current broken (Ic) in AC-4 is equal to 6 x Ie (Ie = rated operational current of the motor).

DF537521.eps

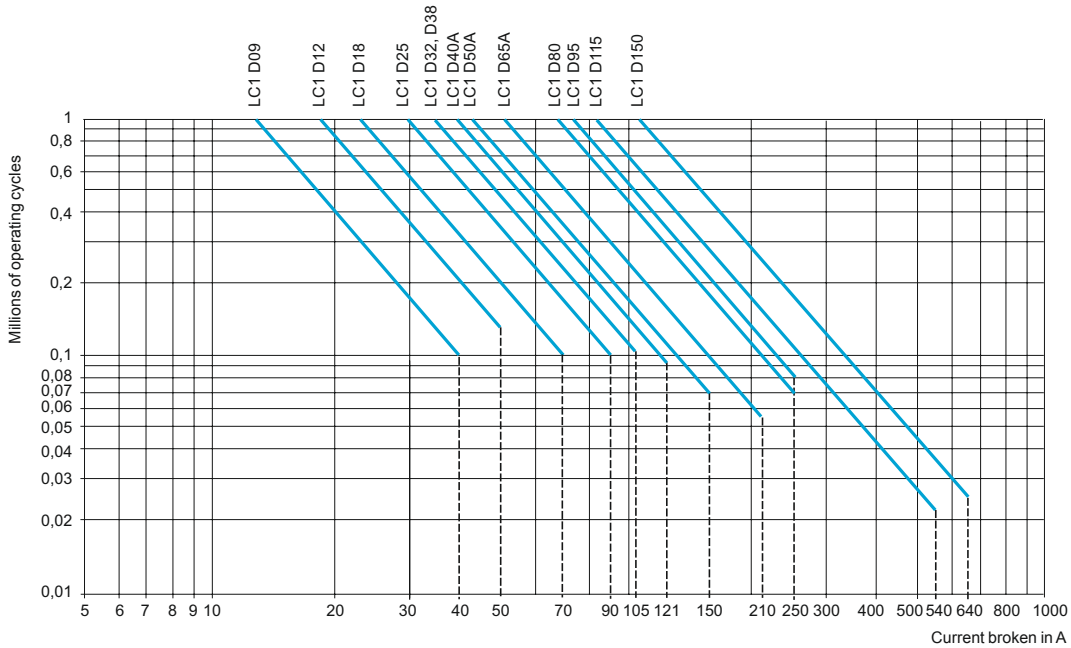

Characteristics: pages B8/55 to B8/60
References: pages B8/2 to B8/7
Dimensions, Schemes: pages B8/67 to B8/72

TeSys contactors
For utilisation categories AC-2 or AC-4

Coordination and standards

Selection according to required electrical durability, in categories AC-2 or AC-4 (Ue ≤ 440 V)

Control of 3-phase asynchronous squirrel cage motors (AC-4) or slip ring motors (AC-2) with breaking whilst motor stalled.
The current broken (Ic) in AC-4 is equal to 6 x Ie.
(Ie = rated operational current of the motor).

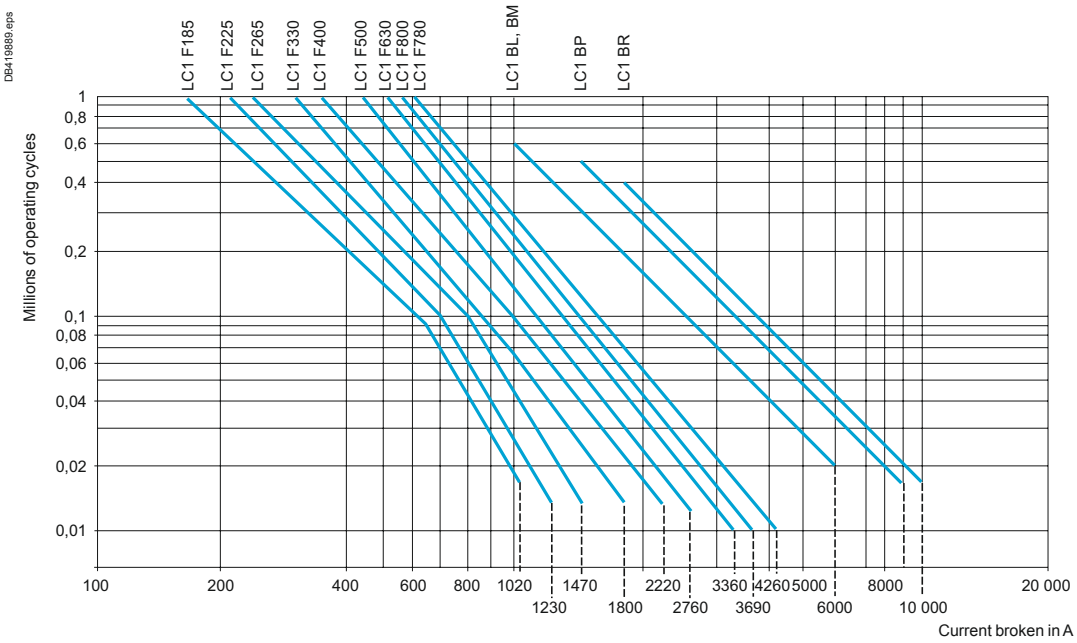

Example:

- asynchronous motor with P = 90 kW - Ue = 380 V - Ie = 170 A. Ic = 6 x Ie = 1020 A.

or asynchronous motor with P = 90 kW - Ue = 415 V - Ie = 165 A. Ic = 6 x Ie = 990 A.

- 60 000 operating cycles required.
- the above selection curves show the contactor rating needed: LC1 F265.

Selection according to required electrical durability, use in category AC-4 (440 V < Ue ≤ 690 V)

Control of 3-phase asynchronous squirrel cage motors with breaking whilst motor stalled.
The current broken (Ic) in AC-4 is equal to 6 x Ie (Ie = rated operational current of the motor).

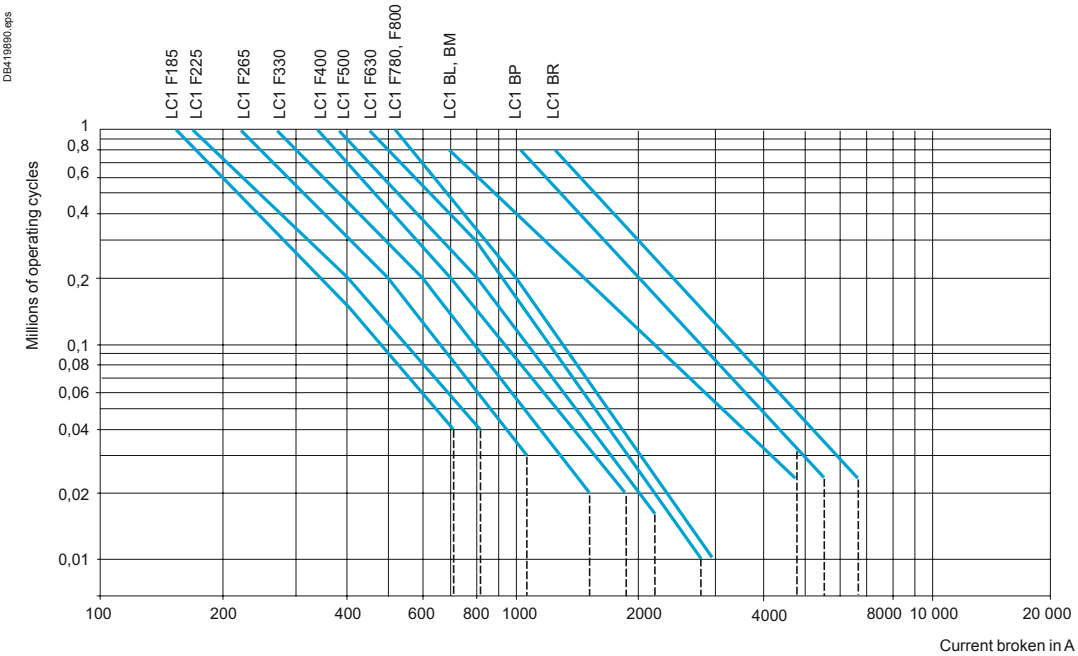

Coordination and standards

TeSys contactors
For utilisation categories DC-1 to DC-5

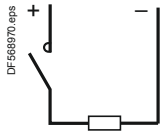

1 pole

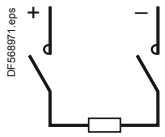

2 poles

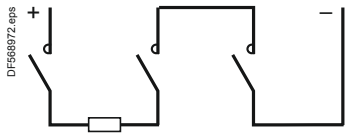

3 poles

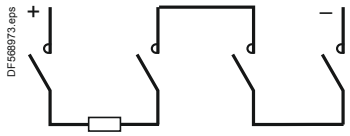

4 poles

Rated operational current (Ie) in Amperes, in utilisation category DC-1, resistive loads: time constant $\frac{L}{R}$ ≤ 1 ms, ambient temperature ≤ 60 °C

Rated operational voltage Ue	No. of poles connected in series	Contactor rating [1]								
		LC1 D09	LC1 DT20	LC1 D12 DT25	LC1 D18 DT32	LC1 D25 DT40	LC1 D32	LC1 D38	LC1 D40A	LC1 DT60A
V										
24	1	20	20	20	25	32	40	40	50	50
	2	20	20	20	25	32	40	40	50	50
	3	20	20	20	25	32	40	40	50	50
	4	–	20	20	25	32	–	–	–	50
48/75	1	20	20	20	25	32	40	40	50	50
	2	20	20	20	25	32	40	40	50	50
	3	20	20	20	25	32	40	40	50	50
	4	–	20	20	25	32	–	–	–	50
125	1	4	4	4	4	7	7	7	7	7
	2	20	20	20	25	32	40	40	50	50
	3	20	20	20	25	32	40	40	50	50
	4	–	20	20	25	32	–	–	–	50
250	1	1	1	1	1	1	1	1	1	1
	2	4	4	4	4	7	7	7	7	7
	3	20	20	20	25	32	40	40	50	50
	4	–	20	20	25	32	–	–	–	50
300	3	4	4	4	4	7	7	7	7	–
	4	–	20	20	25	32	–	–	–	50
460	1	–	–	–	–	–	–	–	–	–
	4	–	–	–	–	–	–	–	–	–
900	2	–	–	–	–	–	–	–	–	–
1200	3	–	–	–	–	–	–	–	–	–
1500	4	–	–	–	–	–	–	–	–	–

Rated operational current (Ie) in Amperes, in utilisation category DC-2 to DC-5, inductive loads: time constant $\frac{L}{R}$ ≤ 15 ms, ambient temperature ≤ 60 °C

Rated operational voltage Ue	No. of poles connected in series	Contactor rating [1]								
		LC1 D09	LC1 DT20	LC1 D12 DT25	LC1 D18 DT32	LC1 D25 DT40	LC1 D32	LC1 D38	LC1 D40A	LC1 DT60A
V										
24	1	20	20	20	25	32	40	40	50	50
	2	20	20	20	25	32	40	40	50	50
	3	20	20	20	25	32	40	40	50	50
	4	–	20	20	25	32	–	–	–	50
48/75	1	20	20	20	25	32	40	40	50	50
	2	20	20	20	25	32	40	40	50	50
	3	20	20	20	25	32	40	40	50	50
	4	–	20	20	25	32	–	–	–	50
125	1	2	2	2	2	3	3	3	4	4
	2	20	20	20	25	32	40	40	50	50
	3	20	20	20	25	32	40	40	50	50
	4	–	20	20	25	32	–	–	–	50
250	1	0.5	0.5	0.5	0.5	0.5	0.5	0.5	1	1
	2	2	2	2	2	3	3	3	4	4
	3	8	8	8	8	32	40	40	50	50
	4	–	20	20	25	32	–	–	–	50
300	3	2	2	2	2	3	3	3	3	3
	4	–	8	8	8	32	–	–	–	50
460	1	–	–	–	–	–	–	–	–	–
	4	–	–	–	–	–	–	–	–	–
900	2	–	–	–	–	–	–	–	–	–
1200	3	–	–	–	–	–	–	–	–	–
1500	4	–	–	–	–	–	–	–	–	–

(1) For rated operational currents of contactors LC1, LP1 K: please contact us.

Characteristics:
pages B8/55 to B8/60

References:
pages B8/2 to B8/7

Dimensions, Schemes:
pages B8/67 to B8/72

TeSys contactors
For utilisation categories DC-1 to DC-5

Coordination and standards

LC1 D50A	LC1 D65A	LC1 DT80A	LC1 D80	LC1 D95	LC1 D115	LC1 D150	LC1 F185	LC1 F225	LC1 F265	LC1 F330	LC1 F400	LC1 F500	LC1 F630	LC1 F780	LC1 F800	LC1 BL	LC1 BM	LC1 BP	LC1 BR
65	65	65	100	100	200	200	240	260	300	360	430	580	850	1300	850	700	1100	1750	2400
65	65	65	100	100	200	200	240	260	300	360	430	580	850	1300	850	700	1100	1750	2400
65	65	65	100	100	200	200	240	260	300	360	430	580	850	1300	850	700	1100	1750	2400
–	–	65	100	–	200	–	240	260	300	360	430	580	850	1300	850	700	1100	1750	2400
65	65	65	100	100	200	200	240	260	300	360	430	580	850	1300	850	700	1100	1750	2400
65	65	65	100	100	200	200	240	260	300	360	430	580	850	1300	850	700	1100	1750	2400
65	65	65	100	100	200	200	240	260	300	360	430	580	850	1300	850	700	1100	1750	2400
–	–	65	100	–	200	–	240	260	300	360	430	580	850	1300	850	700	1100	1750	2400
7	7	7	12	12	12	12	210	230	270	320	380	520	760	1180	760	700	1100	1750	2400
65	65	65	100	100	200	200	210	230	270	320	380	520	760	1180	760	700	1100	1750	2400
65	65	65	100	100	200	200	240	260	300	360	430	580	850	1300	850	700	1100	1750	2400
–	–	65	100	–	200	–	240	260	300	360	430	580	850	1300	850	700	1100	1750	2400
1	1.5	1.5	2	2	10	10	–	–	–	–	–	–	–	–	–	700	1100	1750	2400
7	7	7	12	12	200	200	190	200	250	280	350	450	700	1000	700	700	1100	1750	2400
65	65	65	100	100	200	200	240	260	300	360	430	580	850	1300	850	700	1100	1750	2400
–	–	65	100	–	200	–	240	260	300	360	430	580	850	1300	850	700	1100	1750	2400
7	7	7	12	12	200	200	190	200	250	280	350	450	700	1000	700	700	1100	1750	2400
–	–	65	100	–	200	–	240	260	300	360	430	580	850	1000	850	700	1100	1750	2400
–	–	–	–	–	–	–	–	–	–	–	–	–	–	–	–	700	1100	1750	2400
–	–	–	–	–	200	–	190	200	250	280	350	450	700	1000	700	700	1100	1750	2400
–	–	–	–	–	–	–	–	–	–	–	–	–	–	–	–	700	1100	1750	2400
–	–	–	–	–	–	–	–	–	–	–	–	–	–	–	–	700	1100	1750	2400
–	–	–	–	–	–	–	–	–	–	–	–	–	–	–	–	700	1100	1750	2400

LC1 D50A	LC1 D65A	LC1 DT80A	LC1 D80	LC1 D95	LC1 D115	LC1 D150	LC1 F185	LC1 F225	LC1 F265	LC1 F330	LC1 F400	LC1 F500	LC1 F630	LC1 F780	LC1 F800	LC1 BL	LC1 BM	LC1 BP	LC1 BR

65	65	65	100	100	200	200	240	260	300	360	430	580	850	1300	850	700	1100	1750	2400
65	65	65	100	100	200	200	240	260	300	360	430	580	850	1300	850	700	1100	1750	2400
65	65	65	100	100	200	200	240	260	300	360	430	580	850	1300	850	700	1100	1750	2400
–	–	65	100	–	200	–	240	260	300	360	430	580	850	1300	850	700	1100	1750	2400
65	65	65	100	100	200	200	240	260	300	360	430	580	850	1300	850	700	1100	1750	2400
65	65	65	100	100	200	200	240	260	300	360	430	580	850	1300	850	–	–	–	–
65	65	65	100	100	200	200	240	260	300	360	430	580	850	1300	850	700	1100	1750	2400
–	–	65	100	–	200	–	240	260	300	360	430	580	850	1300	850	700	1100	1750	2400
4	4	4	5	5	10	10	–	–	–	–	–	–	–	–	–	700	1100	1750	2400
65	65	65	100	100	200	200	160	180	250	300	350	500	700	1000	700	700	1100	1750	2400
65	65	65	100	100	200	200	240	240	280	310	350	550	850	1000	850	700	1100	1750	2400
–	–	65	100	–	200	–	240	240	280	310	350	550	850	1000	850	700	1100	1750	2400
1	1.5	1.5	1	1	3	3	–	–	–	–	–	–	–	–	–	700	1100	1750	2400
4	4	4	5	5	200	200	140	160	220	280	310	480	680	900	680	700	1100	1750	2400
65	65	65	100	100	200	200	160	180	250	300	350	500	700	1000	700	700	1100	1750	2400
–	–	65	100	–	200	–	240	260	300	360	430	580	850	1300	850	700	1100	1750	2400
3	3	3	5	5	200	200	140	160	220	280	310	480	680	900	680	700	1100	1750	2400
–	–	65	100	–	200	–	240	260	300	360	430	580	850	1300	850	700	1100	1750	2400
–	–	–	–	–	–	–	–	–	–	–	–	–	–	–	–	700	1100	1750	2400
–	–	–	–	–	200	–	140	160	220	280	310	480	680	800	680	700	1100	1750	2400
–	–	–	–	–	–	–	–	–	–	–	–	–	–	–	–	700	1100	1750	2400
–	–	–	–	–	–	–	–	–	–	–	–	–	–	–	–	700	1100	1750	2400
–	–	–	–	–	–	–	–	–	–	–	–	–	–	–	–	700	1100	1750	2400

Characteristics: pages B8/55 to B8/60
References: pages B8/2 to B8/7
Dimensions, Schemes: pages B8/67 to B8/72

TeSys contactors
For utilisation categories DC-1 to DC-5

Selection according to required electrical durability, use in categories DC-1 to DC-5

The criteria for contactor selection are:
- the rated operational current Ie
- the rated operational voltage Ue
- the utilisation category and the time constant L/R
- the required electrical durability.

Maximum operating rate (operating cycles)

The following limits must not be exceeded: 120 operating cycles/hour at rated operational current Ie.

Electrical durability

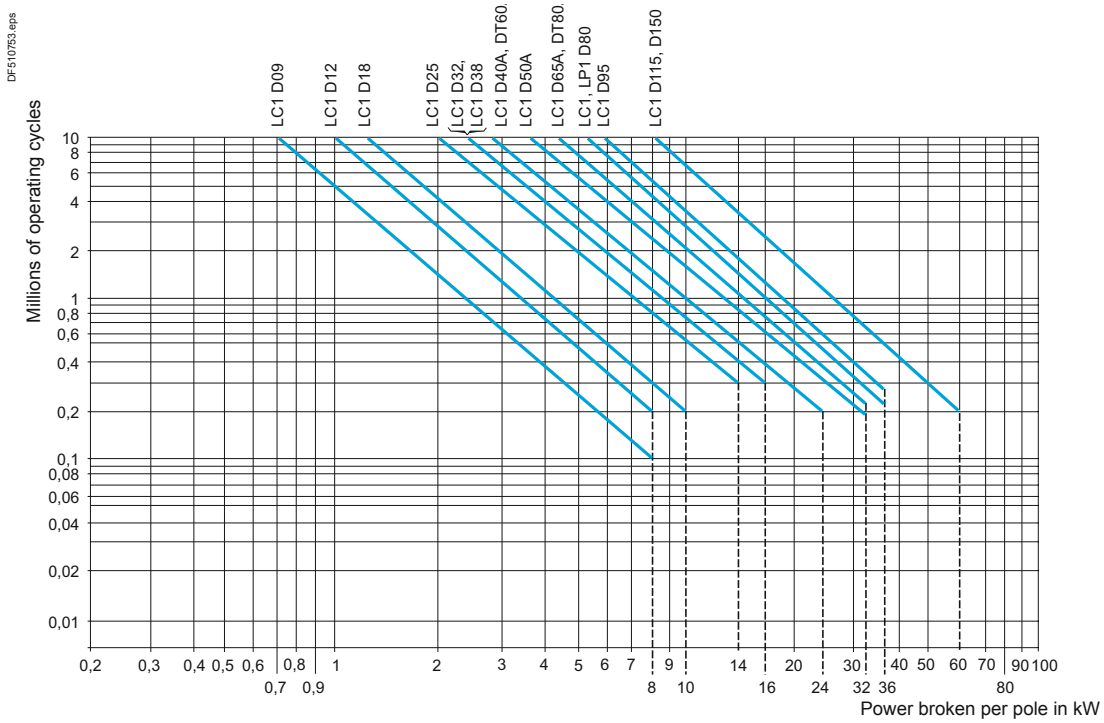

Example
Series wound motor - P = 1.5 kW - Ue = 200 V - Ie = 7.5 A.
Utilisation: reversing, inching.
- Utilisation category = DC-5.
- Select contactor LC1 D09 with 3 poles in series.
- The power broken is: Pc total = 2.5 x 200 x 7.5 = 3.75 kW.
- The power broken per pole is: 1.25 kW.
- The electrical durability read from the curve is ≥ 3 millions of operating cycles.

Use of poles in parallel

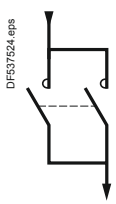

Electrical durability can be increased by using poles connected in parallel.

With N poles connected in parallel, the electrical durability becomes: electrical durability read from the curves x N x 0.7.

Note:
When the poles are connected in parallel, the maximum operational currents indicated on pages A6/34 and A6/35 must not be exceeded.

Note:
Ensure that the connections are made in such a way as to equalise the currents in each pole.

TeSys contactors
For utilisation categories DC-1 to DC-5

Selection according to required electrical durability, use in categories DC-1 to DC-5

Determining the electrical durability

The electrical durability can be read directly from the curves below, having previously calculated the power broken as follows:
P broken = U broken x I broken.
The tables below give the values of Uc and Ic for the various utilisation categories.

Power broken			
Utilisation categories	**U broken**	**I broken**	**P broken**
DC-1 Non inductive or slightly inductive loads	Ue	Ie	Ue x Ie
DC-2 Shunt wound motors, breaking whilst motor running	0.1 Ue	Ie	0.1 Ue x Ie
DC-3 Shunt wound motors, reversing, inching	Ue	2.5 Ie	Ue x 2.5 Ie
DC-4 Series wound motors, breaking whilst motor running	0.3 Ue	Ie	0.3 Ue x Ie
DC-5 Series wound motors, reversing, inching	Ue	2.5 Ie	Ue x 2.5 Ie

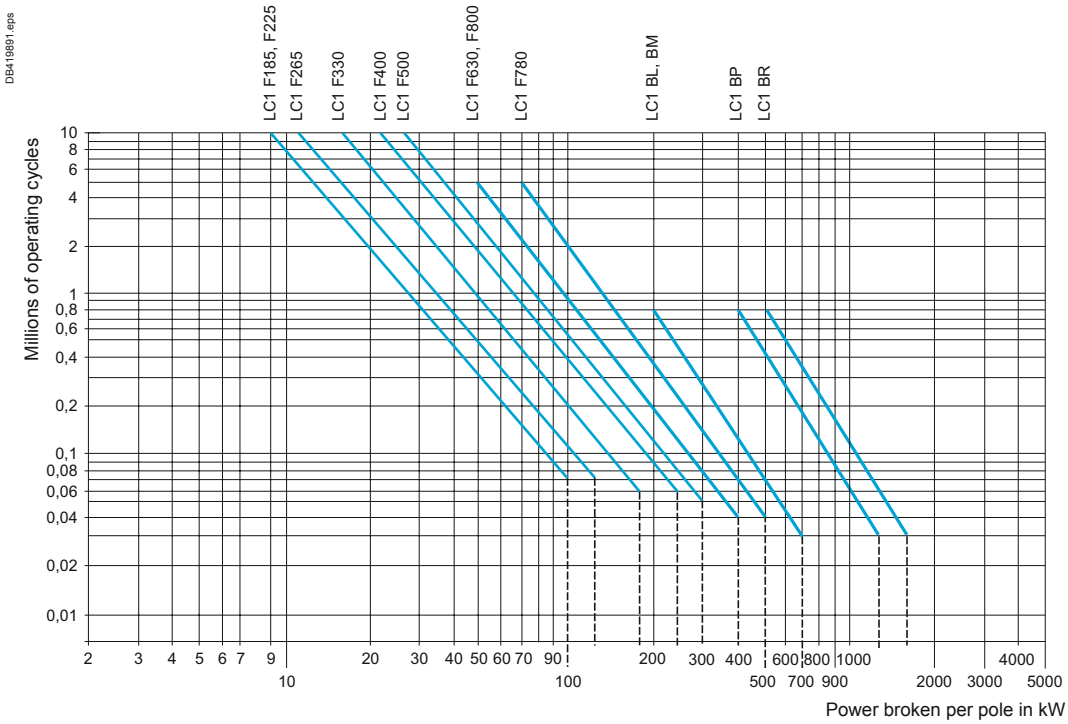

Example
Series wound motor: P = 40 kW - Ue = 200 V - Ie = 200 A.
Utilisation: reversing, inching.
Utilisation category = DC-5.
- Select contactor LC1 F265 with 2 poles in series.
- The power broken is: Pc total = 2.5 x 200 x 200 = 100 kW.
- The power broken per pole is 50 kW.
- The electrical durability read from the curve is 500000 operating cycles.

TeSys contactors
For lighting circuits



General

The operating conditions of lighting circuits have the following characteristics:
- continuous duty: the switching device can remain closed for several days or even months
- a dispersion factor of 1: all luminaires in the same group are switched on or off simultaneously
- a relatively high temperature around the device due to the enclosure, the presence of fuses, or an unventilated control panel location.

This is why the operational current for lighting is lower than the value given for AC-1 duty.

Protection

The continuous duty current drawn by a lighting circuit is constant. In fact:
- it is unlikely that the number of luminaires of an existing circuit will be modified
- this type of circuit cannot create an overload of long duration.

It is therefore only necessary to provide short-circuit protection.
This can be provided by:
- gG type fuses, or
- modular circuit breakers.

Nevertheless, it is always possible and sometimes more economical (smaller cable size) to protect the circuit by a thermal overload relay and associated aM type uses.

Distribution system

Single-phase circuit, 220/240 V

The tables on pages A6/39 to A6/43 are based on a single-phase 220/240 V circuit and can therefore be applied directly in this case.

3-phase circuit, 380/415 V (with neutral)

The total number of lamps (N) to be switched simultaneously is divided into three equal groups, each connected between one phase and neutral. The contactor can then be selected from the 220/240 V single-phase tables for a number of lamps equal to $\frac{N}{3}$ lamps.

3-phase circuit, 220/240 V

The total number of lamps (N) to be switched simultaneously is divided into three equal groups, each connected between 2 phases (L1-L2), (L2-L3), (L3-L1).
The contactor can then be selected from the 220/240 V single-phase table for a number of lamps equal to $\frac{N}{\sqrt{3}}$ lamps.

Contactor selection tables

For the different types of lamps, the tables on pages A6/39 to A6/43 give the maximum number of lamps of unit power P (in Watts), which can be switched simultaneously for each size of contactor.
They are based on:
- a 220/240 V single-phase circuit
- an ambient temperature of 55 °C (1), taking into account the operating conditions (see General paragraph)
- an electrical life of more than 10 years (200 days' operation per year).

They take into account:
- the total current drawn (including ballast)
- transient phenomena which occur at switch-on
- the starting currents and their duration
- the circulation of any harmonics which may be present.

Lamps with compensating capacitor C (µF) connected in parallel

Parallel connected compensating capacitors **C** cause a current peak at the moment of switch-on. To ensure that the value of this current peak remains compatible with the making characteristics of the contactors, the unit value of the capacitance must not exceed the following:

Switching contactor rating	**LC1 K09**	**LP1 K09**	**LC1 D09**	**LC1 D12**	**LC1 D18**	**LC1 D25**	**LC1 D32**	**LC1 D38**	**LC1 D40A**	**LC1 D50A**	**LC1 D65A**	**LC1 D80**
Maximum unit value C (µF) of parallel connected compensating capacitor	7	3	18	18	25	60	96	96	120	120	240	240
Switching contactor rating	**LC1 D95**	**LC1 D115**	**LC1 D150**	**LC1 F185**	**LC1 F225**	**LC1 F265**	**LC1 F330**	**LC1 F400**	**LC1 F500**	**LC1 F630**	**LC1 F800**	
Maximum unit value C (µF) of parallel connected compensating capacitor	240	300	360	800	1200	1700	2500	4000	6000	9000	10800	

This value is independent of the number of lamps switched by the contactor.

(1) For an ambient temperature of 40 °C, multiply the number by 1.2.

Characteristics: pages B8/55 to B8/60
References: pages B8/2 to B8/7
Dimensions, Schemes: pages B8/67 to B8/72

TeSys contactors
For lighting circuits



Usual values

The tables show the following values:
- IB: value of current drawn by each lamp at its rated voltage,
- C: unit capacitance for each lamp,

corresponding to the values normally quoted by lamp manufacturers.

These values are given for an ambient temperature of 55 °C (for 40 °C, multiply the number by 1.2).

Incandescent and halogen lamps

P (W)	60	75	100	150	200	300	500	750	1000	
IB (A)	0.27	0.34	0.45	0.68	0.91	1.40	2.30	3.40	4.60	LC1
Max. no. of lamps according to P (W)	35	28	21	14	10	6	4	2	2	K09
	59	47	35	23	17	11	7	4	3	D09, D12
	77	61	46	30	23	15	9	6	4	D18
	92	73	55	36	27	18	11	7	5	D25
	129	103	77	51	38	25	15	10	7	D32, D38
	163	129	97	64	48	31	19	13	9	D40A
	207	164	124	82	62	40	24	16	12	D50A, D65A
	296	235	177	117	88	57	34	23	17	D80, D95
	430	340	256	170	126	82	50	34	24	D115
	466	370	280	184	138	90	54	36	26	D150
	710	564	426	282	210	136	82	56	40	F185
	770	610	462	304	228	148	90	60	44	F225
	888	704	532	352	262	170	104	70	52	F265
	1006	800	604	400	298	194	118	80	58	F330
	1274	1010	764	504	378	244	148	100	74	F400
	1718	1364	1030	682	508	330	200	136	100	F500
	2328	1850	1396	924	690	448	272	184	136	F630
	2776	2204	1666	1102	824	534	326	220	162	F800

Mixed lighting lamps

P (W)	100	160	250	500	1000	
IB (A)	0.45	0.72	1.10	2.30	4.50	LC1
Max. no. of lamps according to P (W)	21	13	8	4	2	K09
	35	22	14	7	3	D09, D12
	46	29	18	9	4	D18
	55	36	23	11	5	D25
	77	48	30	15	7	D32, D38
	97	61	38	19	9	D40A
	124	77	49	24	12	D50A, D65A
	177	111	70	34	17	D80, D95
	256	160	104	50	26	D115
	280	174	114	54	28	D150
	426	266	174	82	42	F185
	462	288	188	90	46	F225
	532	332	218	104	52	F265
	604	378	246	118	60	F330
	764	478	312	150	76	F400
	1030	644	422	202	102	F500
	1398	874	572	272	140	F630
	1666	1040	680	326	166	F800

TeSys contactors
For lighting circuits



Usual values

The tables show the following values:
- IB: value of current drawn by each lamp at its rated voltage
- C: unit capacitance for each lamp

corresponding to the values normally quoted by lamp manufacturers.

These values are given for an ambient temperature of 55 °C (for 40 °C, multiply the number by 1.2).

Fluorescent lamps with starter. Single fitting

	Non corrected				With parallel correction						
P (W)	**20**	**40**	**65**	**80**	**110**	**20**	**40**	**65**	**80**	**110**	
IB (A)	**0.39**	**0.45**	**0.70**	**0.80**	**1.2**	**0.17**	**0.26**	**0.42**	**0.52**	**0.72**	
C (µF)	**–**	**–**	**–**	**–**	**–**	**5**	**5**	**7**	**7**	**16**	**LC1**
Max. no. of lamps according to P (W)	24	21	13	12	8	56	36	22	18	–	**K09**
	41	35	22	20	13	94	61	38	30	22	**D09, D12**
	53	46	30	26	17	123	80	50	40	29	**D18**
	66	57	37	32	21	152	100	61	50	36	**D25**
	89	77	50	43	29	205	134	83	67	48	**D32, D38**
	112	97	62	55	36	258	169	104	84	61	**D40A**
	143	124	80	70	46	329	215	133	107	77	**D50A, D65A**
	205	177	114	100	66	470	367	190	153	111	**D80, D95**
	410	354	228	200	132	940	614	380	306	222	**D115, D150**
	492	426	274	240	160	1128	738	456	368	266	**F185**
	532	462	296	260	172	1224	800	490	400	288	**F225**
	614	532	342	300	200	1412	922	570	462	332	**F265**
	696	604	388	340	226	1600	1046	648	522	378	**F330**
	882	764	490	430	286	2024	1322	818	662	478	**F400**
	1190	1030	662	580	386	2728	1724	1104	892	644	**F500**
	1612	1398	698	786	524	3700	2418	1498	1210	874	**F630, F800**

Fluorescent lamps with starter. Twin fitting

	Non corrected					With series correction					
P (W)	**2x20**	**2x40**	**2x65**	**2x80**	**2x110**	**2x20**	**2x40**	**2x65**	**2x80**	**2x110**	
IB (A)	**2x0.22**	**2x0.41**	**2x0.67**	**2x0.82**	**2x1.1**	**2x0.13**	**2x0.24**	**2x0.39**	**2x0.48**	**2x0.65**	**LC1**
Max. no. of lamps according to P (W)	2x21	2x11	2x7	2x5	2x4	2x36	2x20	2x12	2x10	2x7	**K09**
	2x36	2x18	2x10	2x8	2x6	2x60	2x32	2x20	2x16	2x12	**D09, D12**
	2x46	2x24	2x14	2x12	2x8	2x80	2x42	2x26	2x20	2x16	**D18**
	2x58	2x30	2x18	2x14	2x10	2x100	2x54	2x32	2x26	2x20	**D25**
	2x78	2x42	2x26	2x20	2x14	2x134	2x72	2x44	2x36	2x26	**D32, D38**
	2x100	2x52	2x32	2x26	2x18	2x168	2x90	2x56	2x44	2x32	**D40A**
	2x126	2x68	2x40	2x34	2x24	2x214	2x116	2x70	2x58	2x42	**D50A, D65A**
	2x180	2x96	2x58	2x48	2x36	2x306	2x166	2x102	2x82	2x60	**D80, D95**
	2x360	2x194	2x118	2x96	2x72	2x614	2x332	2x204	2x166	2x122	**D115, D150**
	2x436	2x234	2x142	2x116	2x86	2x738	2x400	2x246	2x200	2x148	**F185**
	2x472	2x254	2x154	2x126	2x94	2x800	2x432	2x266	2x216	2x160	**F225**
	2x544	2x292	2x178	2x146	2x108	2x922	2x500	2x308	2x250	2x184	**F265**
	2x618	2x332	2x202	2x166	2x124	2x1046	2x566	2x348	2x282	2x208	**F330**
	2x782	2x420	2x256	2x210	2x156	2x1322	2x716	2x440	2x358	2x264	**F400**
	2x1054	2x566	2x346	2x282	2x210	2x1784	2x966	2x594	2x482	2x356	**F500**
	2x1430	2x766	2x468	2x384	2x286	2x2418	2x1310	2x806	2x654	2x484	**F630, F800**

Characteristics:
pages B8/55 to B8/60

References:
pages B8/2 to B8/7

Dimensions, Schemes:
pages B8/67 to B8/72

TeSys contactors
For lighting circuits



Usual values

The tables show the following values:
- IB: value of current drawn by each lamp at its rated voltage
- C: unit capacitance for each lamp

corresponding to the values normally quoted by lamp manufacturers.

These values are given for an ambient temperature of 55 °C (for 40 °C, multiply the number by 1.2).

Fluorescent lamps without starter. Single fitting

	Non corrected					With parallel correction					
P (W)	**20**	**40**	**65**	**80**	**110**	**20**	**40**	**65**	**80**	**110**	
IB (A)	**0.43**	**0.55**	**0.80**	**0.95**	**1.4**	**0.19**	**0.29**	**0.46**	**0.57**	**0.79**	
C (µF)	**–**	**–**	**–**	**–**	**–**	**5**	**5**	**7**	**7**	**16**	**LC1**
Max. no. of lamps according to P (W)	22	17	12	10	6	50	33	20	16	–	**K09**
	37	29	20	16	11	84	55	34	28	20	**D09, D12**
	48	38	26	22	15	110	72	45	36	26	**D18**
	60	47	32	27	18	136	89	56	45	32	**D25**
	97	63	43	36	25	184	101	76	61	44	**D32, D38**
	102	80	55	46	31	231	151	95	77	55	**D40A**
	130	101	70	58	40	294	193	121	98	70	**D50A, D65A**
	186	145	100	84	57	421	275	173	140	101	**D80, D95**
	372	290	200	168	114	842	550	346	280	202	**D115, D150**
	446	348	240	202	136	1010	662	416	336	242	**F185**
	484	378	260	218	148	1094	716	452	364	262	**F225**
	558	436	300	252	170	1262	828	522	420	304	**F265**
	632	494	340	286	194	1432	938	590	476	344	**F330**
	800	624	430	362	246	1810	1186	748	604	434	**F400**
	1078	844	580	488	330	2442	1600	1008	814	586	**F500**
	1462	1144	786	662	448	3310	2168	1366	1104	796	**F630, F800**

Fluorescent lamps without starter. Twin fitting

	Non corrected					With series correction					
P (W)	**2x20**	**2x40**	**2x65**	**2x80**	**2x110**	**2x20**	**2x40**	**2x65**	**2x80**	**2x110**	
IB (A)	**2x0.25**	**2x0.47**	**2x0.76**	**2x0.93**	**2x1.3**	**2x0.14**	**2x0.26**	**2x0.43**	**2x0.53**	**2x0.72**	**LC1**
Max. no. of lamps according to P (W)	2x19	2x10	2x6	2x5	2x3	2x34	2x18	2x11	2x9	2x6	**K09**
	2x32	2x16	2x10	2x8	2x6	2x56	2x30	2x18	2x14	2x10	**D09, D12**
	2x42	2x22	2x12	2x10	2x8	2x74	2x40	2x24	2x18	2x14	**D18**
	2x52	2x26	2x16	2x12	2x10	2x92	2x50	2x30	2x24	2x18	**D25**
	2x70	2x36	2x22	2x18	2x12	2x124	2x66	2x40	2x32	2x24	**D32, D38**
	2x88	2x46	2x28	2x22	2x16	2x156	2x84	2x50	2x40	2x30	**D40A**
	2x112	2x58	2x36	2x30	2x20	2x200	2x106	2x64	2x52	2x38	**D50A, D65A**
	2x160	2x84	2x52	2x42	2x30	2x234	2x152	2x92	2x74	2x54	**D80, D95**
	2x320	2x170	2x104	2x86	2x60	2x570	2x306	2x186	2x150	2x110	**D115, D150**
	2x384	2x204	2x126	2x102	2x74	2x686	2x368	2x222	2x180	2x132	**F185**
	2x416	2x220	2x136	2x112	2x80	2x742	2x400	2x242	2x196	2x144	**F225**
	2x480	2x254	2x158	2x128	2x92	2x856	2x462	2x278	2x226	2x166	**F265**
	2x544	2x288	2x178	2x146	2x104	2x970	2x522	2x316	2x256	2x188	**F330**
	2x688	2x366	2x226	2x184	2x132	2x1228	2x662	2x400	2x324	2x238	**F400**
	2x928	2x494	2x304	2x248	2x178	2x1656	2x892	2x540	2x438	2x322	**F500**
	2x1258	2x668	2x414	2x338	2x242	2x2246	2x1210	2x730	2x592	2x436	**F630, F800**

TeSys contactors
For lighting circuits



Usual values

The tables show the following values:
- IB: value of current drawn by each lamp at its rated voltage
- C: unit capacitance for each lamp

corresponding to the values normally quoted by lamp manufacturers.

These values are given for an ambient temperature of 55 °C (for 40 °C, multiply the number by 1.2).

Low pressure sodium vapour lamps

	Non corrected							With parallel correction							
P (W)	**35**	**55**	**90**	**135**	**150**	**180**	**200**	**35**	**55**	**90**	**135**	**150**	**180**	**200**	
IB (A)	**1.2**	**1.6**	**2.4**	**3.1**	**3.2**	**3.3**	**3.4**	**0.3**	**0.4**	**0.6**	**0.9**	**1**	**1.2**	**1.3**	
C (µF)	**–**	**–**	**–**	**–**	**–**	**–**	**–**	**17**	**17**	**25**	**36**	**36**	**36**	**36**	**LC1**
Max. no. of lamps according to P (W)	6	5	3	2	2	2	2	–	–	–	–	–	–	–	**K09**
	10	7	5	3	3	3	3	40	30	–	–	–	–	–	**D09, D12**
	12	9	6	4	4	4	4	50	37	25	–	–	–	–	**D18**
	15	11	7	6	5	5	5	63	47	31	21	19	15	14	**D25**
	21	16	10	8	8	7	7	86	65	43	28	26	21	20	**D32, D38**
	27	20	13	10	10	10	9	110	82	55	36	33	27	25	**D40A**
	35	26	17	13	13	12	12	140	105	70	46	42	35	32	**D50A, D65A**
	50	37	25	19	18	18	17	200	150	100	66	60	50	46	**D80, D95**
	100	75	50	38	36	36	34	400	300	200	132	120	100	92	**D115, D150**
	140	104	70	54	52	50	48	560	420	280	186	168	140	128	**F185**
	152	114	76	58	56	54	54	606	454	302	202	182	152	140	**F225**
	174	130	88	68	66	64	62	700	524	350	232	210	174	162	**F265**
	198	148	98	76	74	72	70	792	594	396	264	238	198	182	**F330**
	250	188	124	96	94	90	88	1002	752	502	334	300	250	252	**F400**
	338	254	168	130	126	122	118	1352	1014	676	450	406	338	312	**F500**
	496	372	248	192	186	180	174	1982	1488	992	660	594	496	458	**F630, F800**

High pressure sodium vapour lamps

	Non corrected					With parallel correction					
P (W)	**150**	**250**	**400**	**700**	**1000**	**150**	**250**	**400**	**700**	**1000**	
IB (A)	**1.9**	**3.2**	**5**	**8.8**	**12.4**	**0.84**	**1.4**	**2.2**	**3.9**	**5.5**	
C (µF)	**–**	**–**	**–**	**–**	**–**	**20**	**32**	**48**	**96**	**120**	**LC1**
Max. no. of lamps according to P (W)	4	2	1	–	–	–	–	–	–	–	**K09**
	6	3	2	1	–	–	–	–	–	–	**D09, D12**
	7	4	3	1	1	17	–	–	–	–	**D18**
	10	5	3	2	1	22	13	8	–	–	**D25**
	13	8	5	2	2	30	18	11	6	–	**D32, D38**
	17	10	6	3	2	39	23	15	8	6	**D40A**
	22	13	8	4	3	50	30	19	10	7	**D50A, D65A**
	31	18	12	6	4	71	42	27	15	10	**D80, D95**
	62	36	24	12	8	142	84	54	30	20	**D115, D150**
	88	52	34	18	14	200	120	76	42	30	**F185**
	96	56	36	20	16	216	130	82	46	32	**F225**
	110	66	42	24	18	250	150	94	54	38	**F265**
	124	74	48	26	20	282	170	108	60	42	**F330**
	158	94	60	34	24	358	214	136	76	54	**F400**
	214	126	80	46	32	482	290	184	104	74	**F500**
	312	186	118	68	48	708	424	270	152	108	**F630, F800**

Characteristics:
pages B8/55 to B8/60

References:
pages B8/2 to B8/7

Dimensions, Schemes:
pages B8/67 to B8/72

TeSys contactors
For lighting circuits



Usual values

The tables show the following values:
- IB: value of current drawn by each lamp at its rated voltage
- C: unit capacitance for each lamp

corresponding to the values normally quoted by lamp manufacturers.

These values are given for an ambient temperature of 55 °C (for 40 °C, multiply the number by 1.2).

High pressure mercury vapour lamps

	Non corrected							With parallel correction							
P (W)	**50**	**80**	**125**	**250**	**400**	**700**	**1000**	**50**	**80**	**125**	**250**	**400**	**700**	**1000**	
IB (A)	**0.54**	**0.81**	**1.20**	**2.30**	**4.10**	**6.80**	**9.90**	**0.3**	**0.45**	**0.67**	**1.3**	**2.3**	**3.8**	**5.5**	
C (µF)	**–**	**–**	**–**	**–**	**–**	**–**	**–**	**10**	**10**	**10**	**18**	**25**	**40**	**60**	**LC1**
Max. no. of lamps according to P (W)	14	9	6	3	1	–	–	–	–	–	–	–	–	–	**K09**
	22	14	9	5	2	1	1	40	26	17	9	–	–	–	**D09, D12**
	27	18	12	6	3	2	1	50	33	22	11	6	–	–	**D18**
	35	23	15	8	4	2	1	63	42	28	14	8	5	3	**D25**
	48	32	21	11	6	3	2	86	57	38	20	11	6	4	**D32, D38**
	61	40	27	14	8	4	3	110	73	49	25	14	8	6	**D40A**
	77	51	34	17	10	6	4	140	93	62	32	18	11	7	**D50A, D65A**
	111	74	49	26	14	8	6	200	133	89	46	26	15	10	**D80, D95**
	222	148	100	52	28	16	12	400	266	178	92	52	30	20	**D115, D150**
	310	206	140	72	40	24	17	560	372	250	128	72	44	30	**F185**
	336	224	152	78	44	26	18	606	404	272	140	78	48	32	**F225**
	388	258	174	90	50	30	20	700	466	312	162	90	54	38	**F265**
	440	294	198	102	58	34	24	792	528	354	182	102	62	42	**F330**
	556	372	250	130	72	44	30	1002	668	448	232	130	78	54	**F400**
	752	500	338	176	98	60	40	1352	902	606	312	176	106	74	**F500**
	1102	734	496	258	144	88	60	1982	1322	888	458	258	156	108	**F630, F800**

Metal iodine vapour lamps

	Non corrected				With parallel correction				
P (W)	**250**	**400**	**1000**	**2000**	**250**	**400**	**1000**	**2000**	
IB (A)	**2.5**	**3.6**	**9.5**	**20**	**1.4**	**2**	**5.3**	**11.2**	
C (µF)	**–**	**–**	**–**	**–**	**32**	**32**	**64**	**140**	**LC1**
Max. no. of lamps according to P (W)	3	2	–	–	–	–	–	–	**K09**
	4	3	1	–	–	–	–	–	**D09, D12**
	6	4	1	–	–	–	–	–	**D18**
	7	5	2	–	13	9	–	–	**D25**
	10	7	2	1	18	13	4	–	**D32, D38**
	13	9	3	1	23	16	6	–	**D40A**
	16	11	4	2	30	21	7	–	**D50A, D65A**
	24	16	6	3	42	30	11	5	**D80, D95**
	48	32	12	6	84	60	22	10	**D115, D150**
	66	46	18	8	120	84	32	14	**F185**
	72	50	20	10	130	90	34	16	**F225**
	84	58	22	12	150	104	40	18	**F265**
	94	66	24	14	170	118	44	20	**F330**
	120	84	32	16	214	150	56	26	**F400**
	162	112	42	20	290	202	76	36	**F500**
	238	164	62	30	424	298	112	52	**F630, F800**

TeSys contactors
For heating circuits

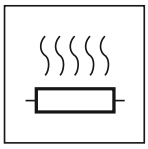

General
A heating circuit is a power switching circuit supplying one or more resistive heating elements switched by a contactor. The same general rules apply as for motor circuits, except that heating circuits are not normally subjected to overload currents. It is therefore only necessary to provide short-circuit protection.

Characteristics of heating elements
The examples below are based on resistive heating elements used for industrial furnaces or for the heating of buildings (infra-red or resistive radiant type, convector heaters, closed loop heating circuits, etc.). The variation in resistance values between hot and cold states causes a current peak at switch-on which never exceeds 2 to 3 times the rated operational current (In). This initial peak does not recur during normal operation where subsequent switching is thermostatically controlled. The rated power and current of a heater are given for the normal operating temperature.

Protection
The steady state current drawn by a heating circuit is constant when the voltage is stable. In fact:
- it is unlikely that the number of loads in an existing circuit will be modified
- this type of circuit cannot create overloads. It is therefore only necessary to provide short-circuit protection.

This can be provided by:
- gG type fuses, or
- modular circuit breakers.

Nevertheless, it is always possible and sometimes more economical (smaller cable size) to protect the circuit by a thermal overload relay and associated aM type fuses.

Switching, control, protection
A heating element or group of heating elements of a given power may be either single-phase or 3-phase and may be supplied from a 220/127 V or a 400/230 V distribution system. Excluding a single-phase 127 V system (which is no longer commonly used), the following 3 types of circuit arrangement are possible:
- single-phase, 2-pole switching
- single-phase, 4-pole switching
- 3-phase switching

Component selection according to the power switched
The combinations suggested below are based on an ambient temperature of 55 °C and for powers at the nominal voltage, but they also ensure switching in the event of prolonged overloads up to 1.05 Ue.

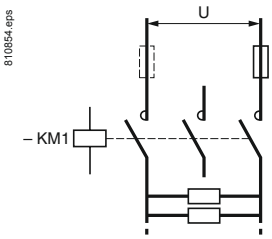

Circuit controlled by 2 poles of the contactor.

Single-phase, 2-pole switching				
Maximum power (kW)				Contactor rating
220/240 V	380/415 V	660/690 V	1000 V	
3.5	6.5	11	–	**LC1, LP1K09**
4.5	8	14	–	**LC1D12**
6	10.5	18.5	–	**LC1D18**
7	13	22.5	–	**LC1D25**
10	18	30.5	–	**LC1D32, LC1D38**
13	22.5	39.5	48	**LC1D40A**
16.5	28.5	43.5	68	**LC1D65A**
24	42	73	82.5	**LC1, LP1D80**
44	76	118	157	**LC1D115, LC1D150**
48	83	130	170	**LC1F185**
52	90	145	185	**LC1F225**
60	104	160	210	**LC1F265**
75	130	200	250	**LC1F330**
86	145	230	300	**LC1F4002**
116	200	310	400	**LC1F5002**
170	290	450	695	**LC1F6302, LC1F800**
270	460	715	945	**LC1F780**
140	242	370	490	**LC1BL32**
220	380	580	770	**LC1BM32**
350	605	925	1225	**LC1BP32**
480	830	1270	1680	**LC1BR32**

Characteristics:
pages B8/55 to B8/60

References:
pages B8/2 to B8/7

Dimensions, Schemes:
pages B8/67 to B8/72

TeSys contactors
For heating circuits

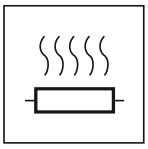

Coordination and standards

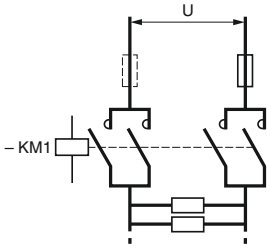

Circuit controlled by a 4-pole contactor with the poles parallel connected in pairs using appropriate connecting links.
This solution enables the control of power values approximately equivalent to those controlled by the same contactor on 3-phase.

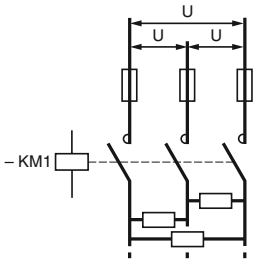

Circuit controlled by 3 poles of the contactor.

Component selection according to the power switched

Single-phase, 4-pole switching

Maximum power (kW)				Contactor rating
220/240 V	380/415 V	660/690 V	1000 V	
4.5	8	13.5	–	**LC1, LP1K09004**
7	13	22.5	–	**LC1DT25**
12	21	36.5	–	**LC1DT40**
26	45.5	79.5	109	**LC1DT80A**
38	66	117.5	132	**LC1, LP1D80004**
70	121	190	251	**LC1D115004**
76	132	202	270	**LC1F1854**
80	142	230	295	**LC1F2254**
96	166	253	335	**LC1F2654**
120	205	320	400	**LC1F3304**
137	236	363	480	**LC1F4004**
185	320	490	650	**LC1F5004**
272	470	718	950	**LC1F6304**
425	735	1140	1520	**LC1F7804**
224	387	590	785	**LC1BL34**
352	608	930	1230	**LC1BM34**
560	968	1478	1960	**LC1BP34**
768	1328	2025	2685	**LC1BR34**

3-phase switching

Maximum power (kW)				Contactor rating
220/240 V	380/415 V	660/690 V	1000 V	
4.5	8	13.5	–	**LC1, LP1K09**
7	13	22.5	–	**LC1D12**
10	18	30.5	–	**LC1D18**
13	22.5	39.5	–	**LC1D25**
18	31	52.5	–	**LC1D32, LC1D38**
22.5	38	68	78	**LC1D40A**
28.5	49	86	112.5	**LC1D65A**
40.5	70.5	126	135.5	**LC1, LP1D80**
76	131	206	275	**LC1D115, LC1D150**
82	143	220	295	**LC1F185**
90	155	250	320	**LC1F225**
103	179	275	370	**LC1F265**
130	225	345	432	**LC1F330**
149	256	395	525	**LC1F400**
200	346	530	710	**LC1F500**
294	509	780	1030	**LC1F630, LC1F800**
463	800	1235	1650	**LC1F780**
242	419	640	850	**LC1BL33**
380	658	1005	1350	**LC1BM33**
606	1047	1600	2150	**LC1BP33**
830	1437	2200	2950	**LC1BR33**

Application example

For a 220 V, 50 Hz, single-phase circuit supplying a total heating load of 12.5 kW. Select a 3-pole contactor **LC1D65A**.

(1) See complete contactor references on pages B8/2 to B8/7 or consult your Regional Sales Office.

TeSys contactors

For switching the primaries of 3-phase LV/LV transformers

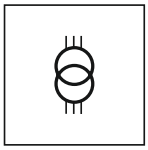

Operating conditions

Maximum ambient temperature: 55 °C.

When a transformer is switched on, there is generally an initial current surge which reaches its peak value almost instantaneously and then decreases in a largely exponential manner to quickly reach its steady state value.

The value of this current depends on:
- the characteristics of the magnetic circuit and of the windings (cross sectional area of the core, rated inductance, number of turns, layout and size of the windings, ...)
- the performance of the magnetic laminations used
- the magnetic state of the circuit and the instantaneous value of the a.c. mains voltage at the moment of switch-on.

The inrush current at the moment of switch-on can reach 20 to 40 times the rated current for the various kVA power ratings in the tables below. This value is independent of the “no-load” or “on-load” state of the transformer.

Contactor selection

The peak magnetising current of the transformer must be lower than the values given in the tables below.
Maximum operating rate: 120 operating cycles/hour.

Contactor rating			LC1/ LP1 K06	LC1/ LP1 K09	LC1 D09	LC1 D12	LC1 D18	LC1 D25	LC1 D32	LC1 D38	LC1 D40A	LC1 D50A	LC1 D65A	LC1 D80	LC1 D95	LC1 D115	LC1 D150
Maximum permissible current peak at switch-on		**A**	160	225	350	350	420	630	770	770	1100	1250	1400	1550	1650	1800	2000
Maximum operational power [1]	220 V 240 V	**kVA**	2	2.5	4	4	5	7	8.5	8.5	14	16	18	19.5	19.5	25	25
	380 V 400 V	**kVA**	3.5	5	7	7	8	12.5	15	15	24	27	31	34	34	50	50
	415 V 440 V	**kVA**	4	5.5	8	8	9	14	17	17	28	32	36	39	39	55	55
	500 V	**kVA**	5	7	9	9	11	16.5	20	20	32	36	40	45	45	65	65
	660 V 690 V	**kVA**	6	8.5	12	12	14	21.5	26.5	26.5	42	48	53	59	59	80	80
	1000 V	**kVA**	–	–	–	–	–	–	–	–	–	–	–	85	95	100	100

Contactor rating			LC1 F185	LC1 F225	LC1 F265	LC1 F330	LP1 F400	LC1 F500	LC1 F630	LC1 F780	LC1 F800	LC1 BL	LC1 BM	LC1 BP	LC1 BR
Maximum permissible current peak at switch-on		**A**	2900	3300	3800	5000	6300	7700	9000	12 000	11 000	18 000	18 000	24 000	30 000
Maximum operational power [1]	220 V 240 V	**kVA**	40	45	50	65	75	100	120	175	145	230	230	300	380
	380 V 400 V	**kVA**	75	80	90	120	130	170	200	280	245	400	400	530	660
	415 V 440 V	**kVA**	80	90	100	130	140	190	220	310	270	450	450	560	700
	500 V	**kVA**	95	100	110	140	170	225	260	350	315	480	480	600	750
	660 V 690 V	**kVA**	120	130	140	170	200	270	350	400	425	600	600	800	950
	1000 V	**kVA**	150	170	200	225	250	375	470	650	550	700	700	1000	1200

(1) Maximum operational power corresponding to a current peak at switch-on of 30 In.

Characteristics:
pages B8/55 to B8/60

References:
pages B8/2 to B8/7

Dimensions, Schemes:
pages B8/67 to B8/72

TeSys contactors

For switching 3-phase capacitor banks used for power factor correction



Standard contactors

Capacitors, together with the circuits to which they are connected, form oscillatory circuits which can, at the moment of switch-on, give rise to high transient currents (> 180 In) at high frequencies (1 to 15 kHz).
As a general rule, the peak current on energisation is lower when:
- the mains inductances are high
- the line transformer ratings are low
- the transformer short-circuit voltage is high
- the ratio between the sum of the ratings of the capacitors already switched into the circuit and that of the capacitor to be switched in is small (for multiple step capacitor banks).

In accordance with standards IEC 60070, NF C 54-100, VDE 0560, the switching contactor must be able to withstand a continuous current of 1.43 times the rated current of the capacitor bank step being switched.
The rated operational powers given in the tables below take this overload into account.
Short-circuit protection is normally provided by gI type HPC fuses rated at 1.7 to 2 In.

Operating conditions

Capacitors are directly switched. **The values of peak current at switch-on must not exceed the values indicated opposite.**
An inductor may be inserted in each of the three phases supplying the capacitors to reduce the peak current, if necessary.
Inductance values are determined according to the selected operating temperature.

Power factor correction by a single-step capacitor bank

The use of a choke inductor is unnecessary: the inductance of the mains supply is adequate to limit the peak to a value compatible with the contactor characteristics.

Power factor correction by a multiple-step capacitor bank

Select a special contactor as defined on page B8/13.
If a standard contactor is used, it is essential to insert a choke inductor in each of the three phases of each step.

Standard contactors

Maximum operating rate: 120 operating cycles/hour.
Electrical durability at maxiumum load: 100 000 operating cycles.
With choke inductors connected, where necessary.

Operational power at 50/60 Hz						Max. peak current	Contactor rating
θ ≤ 40 °C (1)			θ ≤ 55 °C (1)				
220/240 V	400/440 V	600/690 V	220/240 V	400/440 V	600/690 V		
kvAR	kvAR	kvAR	kvAR	kvAR	kvAR	A	
6	11	15	6	11	15	560	**LC1D09, D12**
9	15	20	9	15	20	850	**LC1D18**
11	20	25	11	20	25	1600	**LC1D25**
14	25	30	14	25	30	1900	**LC1D32, D38**
17	30	37	17	30	37	2160	**LC1D40**
22	40	50	22	40	50	2160	**LC1D50**
22	40	50	22	40	50	3040	**LC1D65**
35	60	75	35	60	75	3040	**LC1D80, D95**
50	90	125	38	75	80	3100	**LC1D115**
60	110	135	40	85	90	3300	**LC1D150**
70	125	160	50	100	100	3500	**LC1F185**
80	140	190	60	110	110	4000	**LC1F225**
90	160	225	75	125	125	5000	**LC1F265**
100	190	275	85	140	165	6500	**LC1F330**
125	220	300	100	160	200	8000	**LC1F400**
180	300	400	125	220	300	10 000	**LC1F500**
250	400	600	190	350	500	12 000	**LC1F630**
250	400	600	190	350	500	14 200	**LC1F800**
200	350	500	180	350	500	25 000	**LC1BL**
300	550	650	250	500	600	25 000	**LC1BM**
500	850	950	400	750	750	25 000	**LC1BP**
600	1100	1300	500	1000	1000	25 000	**LC1BR**

(1) Upper limit of temperature category conforming to IEC 60070.

Characteristics:
pages B8/55 to B8/60

References:
pages B8/2 to B8/7

Dimensions, Schemes:
pages B8/67 to B8/72

TeSys contactors
For auto-transformer starting

Applications

Auto-transformer starting is suitable for starting all types of squirrel cage motors: with 3, 6 or even 9 terminals according to North American technology.
Starting is performed at reduced voltage and produces maximum torque at minimum line current.
It allows the starting torque ($C = f(U)^2$) to be adapted to the resistive torque of the driven machine by means of the 2 or 3 intermediate voltage take-off connections on the auto-transformer (0.65 and 0.8 Un or 0.5, 0.65 and 0.8 Un). In general, only one take-off connection is used.
This type of starting is used for high power and/or high inertia machines.
The motor is never disconnected from its power supply during starting (closed transition) and transient phenomena are eliminated.

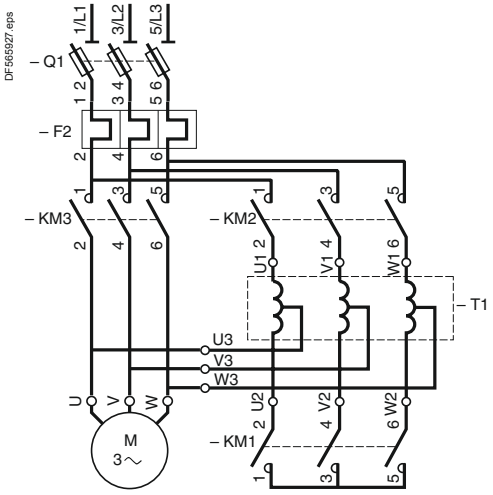

Recommended wiring scheme

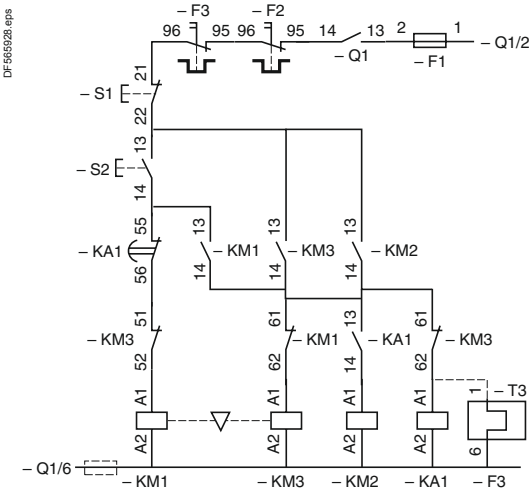

Operation

Starting is performed in 3 stages:
■ star connection of the auto-transformer is made by KM1, then contactor KM2 closes and the motor starts under reduced voltage
■ the neutral point is opened by KM1; part of the auto-transformer winding is switched into each phase for a short moment, constituting a stator starting inductance
■ KM3 switches the motor to full mains voltage and causes the auto-transformer to be shunted out of circuit by KM2.

The auto-transformer used generally has an air gap (adjusted or not) in order to obtain, during the second phase of starting, a series inductance whose value is compatible with correct starting.

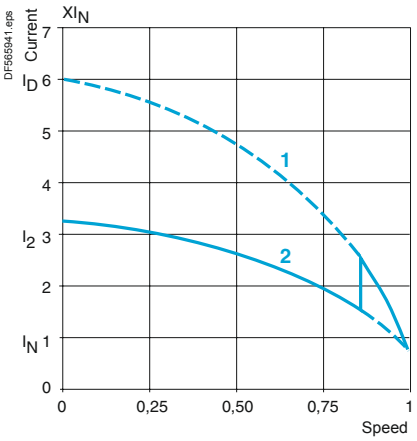

1 Direct switching current
2 Current with auto-transformer

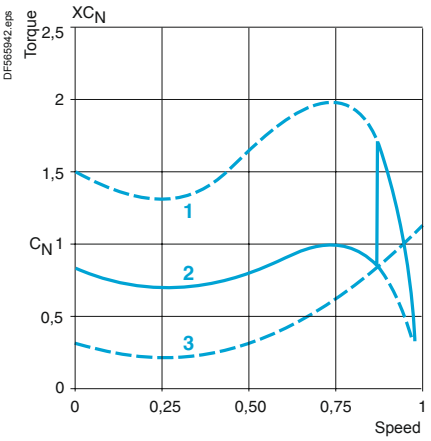

1 Direct motor torque
2 Torque with auto-transformer
3 Resistive torque of the machine

TeSys contactors
For auto-transformer starting

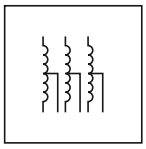

Auto-transformer starters from 59 to 900 kW up to 440 V (type 1 coordination)

The components recommended in the table below have been determined according to the following characteristics:
- auto-transformer: on 0.65 Un connection with non adjusted air gap
- 3 starts per hour, of which 2 consecutive
- motor starting current: Id/In = 6
- Iq = 70 kA
- transient current on closing of KM3 ⩽ 7 $\sqrt{2}$ In
- maximum starting time: 30 seconds
- ambient temperature θ ⩽ 40 °C.

Switch-disconnector-fuses: operators and accessories, please consult your Regional Sales Office.
Contactors: 3-pole.
LC1 D: see pages B8/2 and B8/7,
LC1 F: please consult your Regional Sales Office,
LC1 B: please consult your Regional Sales Office.

Auxiliary contact blocks:
- for contactors LC1 D: one LAD N11 (1 N/O + 1 N/C) on KM1
- for contactors LC1 F: one LAD N22 (2 N/O + 2 N/C) on KM1, KM2 and KM3.

Thermal overload relays:
- LR: see pages B11/4 to B11/9
- LR9 D: see pages B11/5 to B11/9
- LR9 F: please consult your Regional Sales Office.

Standard power ratings of 3-phase motors 50/60 Hz in category AC-3					Switch-disconnector-fuse Reference	aM fuses		Contactors			Overload relays	
						Size	Rating	KM3 LC1	KM2 LC1	KM1 LC1	Reference (1)	Setting range
220/ 230 V	380/ 400 V	415 V	440 V	In max								
kW	kW	kW	kW	A			A					A
30	55	59	59	105	GS● K	22 x 58	125	D115	D115	D3210	LR9 D5369	90…150
											LRD 4367	95…120
40	75	80	80	138	GS● L	T0	160	D150	D115	D5011	LR9 D5369	90…150
											LRD 4369	110…140
51	90	90	100	170	GS● N	T1	200	F185	D115	D5011	LR9 F5371	132…220
63	110	110	110	205	GS● N	T1	250	F225	D150	D8011	LR9 F5371	132…220
75	132	132	150	245	GS● N	T1	250	F265	F185	D115	LR9 F5375	200…330
90	160	160	185	300	GS● QQ	T2	315	F330	F265	D115	LR9 F5375	200…330
110	200	200	220	370	GS● QQ	T2	400	F400	F330	D115	LR9 F5379	300…500
140	250	257	280	460	GS2 S	T3	500	F500	F400	D115	LR9 F5379	300…500
180	315	355	375	584	GS2 S	T3	630	F630	F400	D185	LR9 F5381	380…630
200	355	375	400	635	GS2 V	T4	800	F800	F500	F185	TC800/1 + LRD 05	505…800
220	400	425	450	710	GS2 V	T4	800	F800	F500	F265	TC800/1 + LRD 05	505…800
250	450	475	500	800	GS2 V	T4	800	F800	F500	F265	TC1000/1 + LRD 05	630…1000
280	500	530	560	900	GS2 V	T4	1000	BM33●22	F630	F330	TC1000/1 LRD 05	630…1000
315	560	600	630	1000	GS2 V	T4	1000	BM33●22	F630	F400	TC1250/1 LRD 05	790…1250
335	630	670	710	1100	GS2 V	T4	1250	BP33●22	F630	F400	TC1250/1 LRD 05	790…1250
400	710	750	800	1260	On base	T4	2 x 800 (2)	BP33●22	F780	F400	TC1500/1 LRD 05	945…1500
450	800	800	800	1450	On base	T4	2 x 800 (2)	BP33●22	F780	F400	TC1750/1 LRD 05	100…1750
500	900	900	900	1600	On base	T4	2 x 800 (2)	BR33●22	F780	F500	TC2000/1 LRD 05	260…2000

(1) For power ratings greater than or equal to 400 kW at 415 V, use one LRD-05 on the current transformer.
(2) Check with the motor manufacturer whether the fuses should be fitted in parallel.

TeSys contactors
For rotor circuits of slip-ring motors

Applications

These contactors are used to eliminate starting resistance in the rotor circuit of slip-ring motors.

The most common application is for starters without inching and without rotor speed adjustment: pumps, fans, conveyors, compressors, ...

In the case of control by means of a manually operated master controller, the use of contactors with magnetic blow-out is recommended. Please consult your Regional Sales Office.

For hoisting applications, contactor selection must take into account the type of motor duty, the operating rate, the rotor voltage and current, the type of connection, the ambient temperature, etc.
Please consult your Regional Sales Office.

Operation

The rotor circuit contactors are interlocked with the stator contactor and therefore do not open until after the stator contactor has opened, when the rotor voltage has disappeared, or virtually disappeared.

They make the current corresponding to the normal starting peak (1.5 to 2.5 times the rated rotor current) and open the circuit under no-load. Making and breaking are easy.

Different types of rotor connection

Star connection

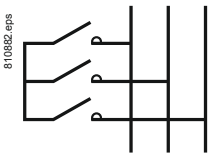

Delta connection

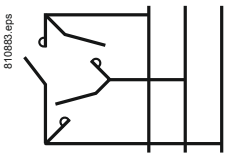

'V' connection

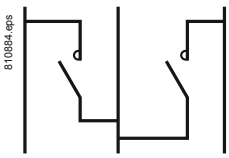

'W' connection

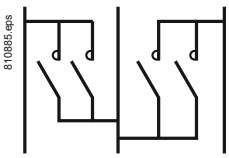

TeSys contactors
For rotor circuits of slip-ring motors

Contactor selection according to the type of connection
Rotor current and voltage coefficients

Coefficients to be applied to the operational current values shown in the table below.

Type of connection	Rotor I coefficient	3-phase rotor Ue [1]			
		Maximum		With counter-current	
	Operational I	LC1 F	LC1 B	LC1 F	LC1 B
Star	1	2000 V	2000 V	1000 V	1000 V
Delta	1.4	1700 V	1700 V	850 V	850 V
In V	1	1700 V	1700 V	850 V	850 V
In W	1.6	1700 V	1700 V	850 V	850 V

Selection according to the operational current

The selection examples below take into account:
- a ratio of 2 between the maximum operational rotor voltage (Uer) and the rated stator operational voltage (Ues). This ratio is given in standard IEC 60947-4,
- a guarantee of occasional duty (making and breaking capacities) specified in the above standards.

Time current flowing	Contactor rating										
	LC1 D150	LC1 F185	LC1 F265	LC1 F400	LC1 F500	LC1 F630	LC1 F780	LC1 BL	LC1 BM	LC1 BP	LC1 BR
Intermediate contactor: with number of operating cycles ≤ 30/h											
10 s	450 A	550 A	800 A	1100 A	1500 A	2000 A	2500 A	2000 A	2400 A	3750 A	5000 A
30 s	280 A	400 A	550 A	730 A	1000 A	1500 A	2000 A	1200 A	1800 A	2600 A	3600 A
60 s	220 A	300 A	400 A	550 A	750 A	1200 A	1500 A	1000 A	1500 A	2200 A	3000 A
Intermediate contactor: with number of operating cycles ≤ 60/h											
5 s	450 A	550 A	800 A	1100 A	1500 A	2000 A	2500 A	2000 A	2400 A	3750 A	5000 A
10 s	330 A	450 A	620 A	860 A	1250 A	1800 A	2300 A	1600 A	2200 A	3400 A	4500 A
30 s	220 A	300 A	400 A	550 A	750 A	1200 A	1500 A	1000 A	1500 A	2200 A	3000 A
Intermediate contactor: with number of operating cycles ≤ 150/h for LC1 F and 120/h for LC1 B											
5 s	300 A	420 A	580 A	820 A	1150 A	1650 A	2200 A	1500 A	2100 A	3200 A	4200 A
10 s	250 A	350 A	430 A	600 A	850 A	1300 A	1600 A	1100 A	1600 A	2300 A	3200 A
Rotor short-circuit contactor and intermediate contactor: with number of operating cycles > 150/h for LC1 F and 120/h for LC1 B											
–	200 A	270 A	350 A	500 A	700 A	1000 A	1600 A	800 A	1250 A	2000 A	2750 A
Electrical durability											
For automatic starting, the electrical durability is in the region of 1 million operating cycles.											

(1) For use up to 3000 V, please consult your Regional Sales Office.

TeSys contactors
Long distance remote control

Voltage drop caused by the inrush current

When the operating coil of a contactor is energised, the inrush current produces a voltage drop in the control circuit cable caused by the resistance of the conductors, which can adversely affect closing of the contactor.
An excessive voltage drop in the control supply cables (both a.c. and d.c.) can lead to non closure of the contactor poles or even destruction of the coil due to overheating.
This phenomenon is aggravated by:
- a long line
- a low control circuit voltage
- a cable with a small c.s.a.
- a high inrush power drawn by the coil.

The maximum length of cable, depending on the control voltage, the inrush power and the conductor c.s.a., is indicated in the graphs below.

Remedial action

To reduce the voltage drop at switch-on:
- increase the conductor c.s.a.
- use a higher control circuit voltage
- use an intermediate control relay.

These graphs are for a maximum line voltage drop of 5 %. They give a direct indication of the copper conductor c.s.a. to be used for the control cable, depending on its length, the inrush power drawn by the contactor coil and the control circuit voltage (see example page A6/53).

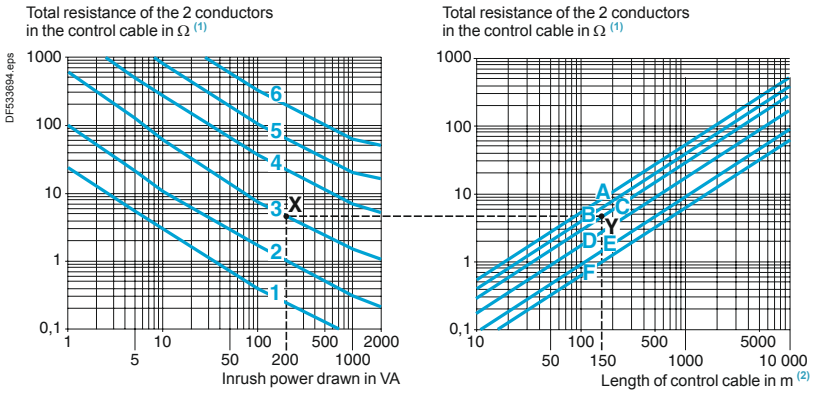

1 ∼ 24 V	3 ∼ 115 V	5 ∼ 400 V

C.s.a. of copper cables		
A 0.75 mm²	C 1.5 mm²	E 4 mm²

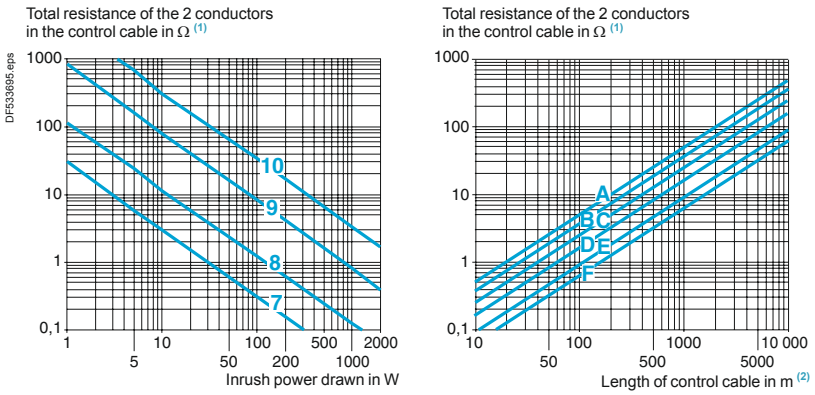

2 ∼ 48 V	4 ∼ 230 V	6 ∼ 690 V

B 1 mm²	D 2.5 mm²	F 6 mm²

7 ⎓ 24 V	9 ⎓ 125 V
8 ⎓ 48 V	10 ⎓ 250 V

C.s.a. of copper cables		
A 0.75 mm²	C 1.5 mm²	E 4 mm²
B 1 mm²	D 2.5 mm²	F 6 mm²

(1) For 3-wire control, the current only flows in 2 of the conductors.
(2) This is the length of the cable comprising 2 or 3 conductors. (Distance between the contactor and the control device).

TeSys contactors
Long distance remote control

Voltage drop caused by the inrush current

What cable c.s.a. is required for the control circuit of an LC1 D40A, 115 V contactor, operated from a distance of 150 metres?

■ Contactor LC1 D40A, voltage 115 V, 50 Hz: inrush power: 200 VA.

On the left-hand graph on the page opposite, point X is at the intersection of the vertical line corresponding to 200 VA and the ∿ 115 V voltage curve.

On the right-hand graph on the page opposite, point Y is at the intersection of the vertical line corresponding to 150 m and the horizontal line passing through point X.

Use the conductor c.s.a. indicated by the curve which passes through point Y, i.e.: 1.5 mm^2.

If point Y lies between two c.s.a. curves, choose the larger of the c.s.a. values.

Calculating the maximum cable length

The maximum permissible length for acceptable line voltage drop is calculated by the formula:

$$L = \frac{U^2}{SA} .s.K$$

where:

L : distance between the contactor and the control device in m (length of the cable)
U : supply voltage in V
SA : apparent inrush power drawn by the coil in VA
s : conductor c.s.a. in mm^2
K : factor given in the table below.

a.c. supply	**SA in VA**	**20**	**40**	**100**	**150**	**200**
	K	1.38	1.5	1.8	2	2.15

d.c. supply	Irrespective of the apparent inrush power SA, expressed in W
	K = 1.38

TeSys contactors
Long distance remote control

Residual current in the coil due to cable capacitance

When the control contact of a contactor is opened, the control cable capacitance is effectively in series with the coil of the electromagnet. This capacitance can cause a residual current to be maintained in the coil, with the risk that the contactor will remain closed.

This only applies to contactors operating on an a.c. supply.

This phenomenon is aggravated by:
- a long line length between the coil control contact and the contactor, or between the coil control contact and the power supply,
- a high control circuit voltage,
- a low coil consumption, sealed,
- a low value of contactor drop-out voltage.

The maximum control cable length, according to the contactor coil supply voltage, is indicated in the graph on the page opposite.

Remedial action

Various solutions can be adopted to avoid the risk of the contactor remaining closed due to cable capacitance:
- use a d.c. control voltage, or
- add a rectifier, connected as shown in the scheme below, but retaining an a.c. operating coil: in this way, rectified a.c. current flows in the control cable.

When calculating the maximum cable length, take the resistance of the conductors into account.

.

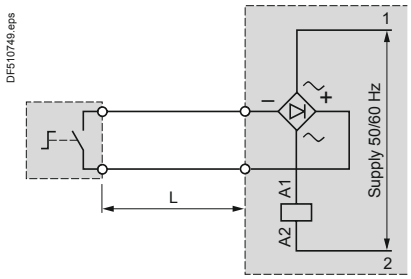

- Connect a resistor in parallel with the contactor coil (1).

Value of the resistance:

$$R\,\Omega = \frac{1}{10^{-3}\,C\,(\mu F)}$$ (C capacitance of the control cable)

Power to be dissipated:

$$PW = \frac{U^2}{R}$$

(1) To avoid increasing the voltage drop due to inrush current, this resistor must be brought into operation after the contactor has closed by using an N/O contact.

TeSys contactors
Long distance remote control

Residual current in the coil due to cable capacitance

These graphs are for a capacitance, between 2 conductors, of 0.2 µF/km. They make it possible to determine whether there is a risk of the contactor remaining closed due to the power drawn by the coil when sealed, as well as the control circuit voltage, according to the length of the control cable.

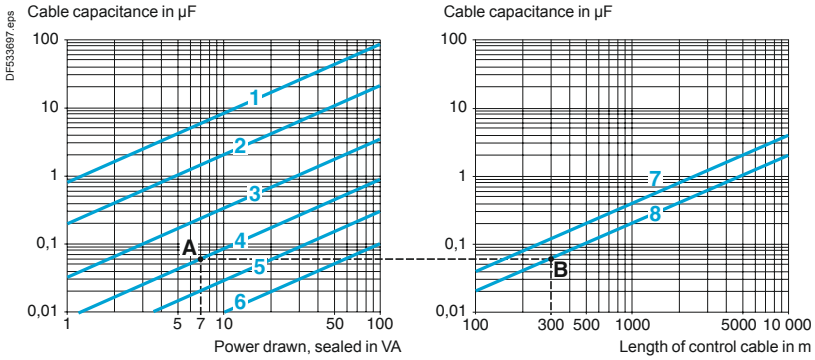

1	∼ 24 V	3	∼ 115 V	5	∼ 400 V	7	3-wire control
2	∼ 48 V	4	∼ 230 V	6	∼ 690 V	8	2-wire control

In the zones below the straight lines for 3-wire and 2-wire control respectively, there is a risk of the contactor remaining closed.

Examples

What is the maximum length for the control cable of an LC1 D12 contactor, operating on 230 V, with 2-wire control?

■ Contactor LC1 D12, voltage 230 V, 50 Hz: power sealed 7 VA.

On the left-hand graph, point A is at the intersection of the vertical line for 7 VA with the ∼ 230 V voltage curve.

On the right-hand graph, point B is at the intersection of the horizontal line with the 2-wire control curve.

The maximum cable length is therefore 300 m.

In the same example, with a 600 m cable, the point lies in the risk zone. A resistor must therefore be connected in parallel with the contactor coil.

$$R = \frac{1}{10^{-3} \cdot C} = \frac{1}{10^{-3} \cdot 0.12} = 8.3\ \Omega$$

Value of this resistance:

$$P = \frac{U^2}{R} = \frac{(220)^2}{8300} = 6\ W$$

Power to be dissipated:

Alternative solution: use a d.c. control supply.

Calculating the cable length

The maximum permitted length of control cable to avoid the effects of capacitance is calculated using the formula:

$$L = 455 \cdot \frac{S}{U^2.Co}$$

L : distance between the contactor and the control device in km (length of the cable),
S : apparent power, sealed, in VA,
U : control voltage in V,
Co : line capacitance of the cable in µF/km.

Technical information

Current of asynchronous squirrel cage motors at nominal load

3-phase 4-pole motors

Current values for power in kW

Rated operational power [1]	Indicative rated operational current values at:			
	230 V	400 V	500 V	690 V
kW	A			
0.06	0.35	0.2	0.16	0.12
0.09	0.52	0.3	0.24	0.17
0.12	0.7	0.44	0.32	0.23
0.18	1	0.6	0.48	0.35
0.25	1.5	0.85	0.68	0.49
0.37	1.9	1.1	0.88	0.64
0.55	2.6	1.5	1.2	0.87
0.75	3.3	1.9	1.5	1.1
1.1	4.7	2.7	2.2	1.6
1.5	6.3	3.6	2.9	2.1
2.2	8.5	4.9	3.9	2.8
3	11.3	6.5	5.2	3.8
4	15	8.5	6.8	4.9
5.5	20	11.5	9.2	6.7
7.5	27	15.5	12.4	8.9
11	38	22	17.6	12.8
15	51	29	23	17
18.5	61	35	28	21
22	72	41	33	24
30	96	55	44	32
37	115	66	53	39
45	140	80	64	47
55	169	97	78	57
75	230	132	106	77
90	278	160	128	93
110	340	195	156	113
132	400	230	184	134
160	487	280	224	162
200	609	350	280	203
250	748	430	344	250
315	940	540	432	313
355	1061	610	488	354
400	1200	690	552	400
500	1478	850	680	493
560	1652	950	760	551
630	1844	1060	848	615
710	2070	1190	952	690
800	2340	1346	1076	780
900	2640	1518	1214	880
1000	2910	1673	1339	970

Current values for power in hp

Rated operational power [2]	Indicative rated operational current values at:						
	110 - 120 V	200 V	208 V	220 - 240 V	380 - 415 V	440 - 480 V	550 - 600 V
hp	A						
1/2	4.4	2.5	2.4	2.2	1.3	1.1	0.9
3/4	6.4	3.7	3.5	3.2	1.8	1.6	1.3
1	8.4	4.8	4.6	4.2	2.3	2.1	1.7
1 1/2	12	6.9	6.6	6	3.3	3	2.4
2	13.6	7.8	7.5	6.8	4.3	3.4	2.7
3	19.2	11	10.6	9.6	6.1	4.8	3.9
5	30.4	17.5	16.7	15.2	9.7	7.6	6.1
7 1/2	44	25.3	24.2	22	14	11	9
10	56	32.2	30.8	28	18	14	11
15	84	48.3	46.2	42	27	21	17
20	108	62.1	59.4	54	34	27	22
25	136	78.2	74.8	68	44	34	27
30	160	92	88	80	51	40	32
40	208	120	114	104	66	52	41
50	260	150	143	130	83	65	52
60	-	177	169	154	103	77	62
75	-	221	211	192	128	96	77
100	-	285	273	248	165	124	99
125	-	359	343	312	208	156	125
150	-	414	396	360	240	180	144
200	-	552	528	480	320	240	192
250	-	-	-	604	403	302	242
300	-	-	-	722	482	361	289
350	-	-	-	828	560	414	336
400	-	-	-	954	636	477	382
450	-	-	-	1030	–	515	412
500	-	-	-	1180	786	590	472

(1) Values conforming to standard IEC 60072-1 (at 50 Hz).
(2) Values conforming to standard UL 508 (at 60 Hz).

***Note:** These values are given as a guide. They may vary depending on the type of motor, its polarity and the manufacturer.*

Technical information
Product standards and certifications

Standardisation
Conformity to standards

Schneider Electric products satisfy, in the majority of cases, national (for example: BS in Great Britain, NF in France, DIN in Germany), European (for example: CENELEC) or international (IEC) standards. These product standards precisely define the performance of the designated products (such as IEC 60947 for low voltage equipment).
When used correctly, as designated by the manufacturer and in accordance with regulations and correct practices, these products will allow users to build equipment, machine systems or installations that conform to their appropriate standards (for example: IEC 60204-1, relating to electrical equipment used on industrial machines).
Schneider Electric is able to provide proof of conformity of its production to the standards it has chosen to comply with, through its quality assurance system.
On request, and depending on the situation, Schneider Electric can provide the following:
- a declaration of conformity,
- a certificate of conformity (ASEFA/LOVAG),
- a homologation certificate or approval, in the countries where this procedure is required or for particular specifications, such as those existing in the merchant navy.

Code	Certification authority		Country
	Name	Abbreviation	
ANSI	American National Standards Institute	ANSI	USA
BS	British Standards Institution	BSI	Great Britain
CEI	Comitato Elettrotecnico Italiano	CEI	Italy
DIN/VDE	Verband Deutscher Electrotechniker	VDE	Germany
EN	Comité Européen de Normalisation Electrotechnique	CENELEC	Europe
GOST	Gosudarstvenne Komitet Standartov	GOST	Russia
IEC	International Electrotechnical Commission	IEC	Worldwide
JIS	Japanese Industrial Standards Committee	JISC	Japan
NBN	Institut Belge de Normalisation	IBN	Belgium
NEN	Nederlands Normalisatie Institut	NNI	Netherlands
NF	Union Technique de l'Electricité	UTE	France
SAA	Standards Association of Australia	SAA	Australia
UNE	Asociacion Española de Normalizacion y Certificacion	AENOR	Spain

European EN standards

These are technical specifications established in conjunction with, and with approval of, the relative bodies within the various CENELEC member countries (European Union, European Free Trade Association and many central and eastern European countries having «member» or «affiliated» status). Prepared in accordance with the principle of consensus, the European standards are the result of a weighted majority vote. Such adopted standards are then integrated into the national collection of standards, and contradictory national standards are withdrawn.
European standards incorporated within the French collection of standards carry the prefix NF EN. At the 'Union Technique de l'Electricité' *(Technical Union of Electricity)* (UTE), the French version of a corresponding European standard carries a dual number: European reference (NF EN …) and classification index (C …).
Therefore, the standard NF EN 60947-4-1 relating to motor contactors and starters, effectively constitutes the French version of the European standard EN 60947-4-1 and carries the UTE classification C 63-110.
This standard is identical to the British standard BS EN 60947-4-1 or the German standard DIN EN 60947-4-1.
Whenever reasonably practical, European standards reflect the international standards (IEC).
With regard to automation system components and distribution equipment, in addition to complying with the requirements of French NF standards, Schneider Electric brand components conform to the standards of all other major industrial countries.

Regulations
European Directives

Opening up of European markets assumes harmonisation of the regulations pertaining to each of the member countries of the European Union.
The purpose of the European Directive is to eliminate obstacles hindering the free circulation of goods within the European Union, and it must be applied in all member countries. Member countries are obliged to transcribe each Directive into their national legislation and to simultaneously withdraw any contradictory regulations. The Directives, in particular those of a technical nature which concern us, only establish the objectives to be achieved, referred to as "essential requirements".
The manufacturer must take all the necessary measures to ensure that his products conform to the requirements of each Directive applicable to his production.
As a general rule, the manufacturer certifies conformity to the essential requirements of the Directive(s) for his product by affixing the CE mark.
The CE mark is affixed to Schneider Electric brand products concerned, in order to comply with French and European regulations.

Significance of the CE mark
- The CE mark affixed to a product signifies that the manufacturer certifies that the product conforms to the relevant European Directive(s) which concern it; this condition must be met to allow free distribution and circulation within the countries of the European Union of any product subject to one or more of the E.U. Directives.
- The CE mark is intended solely for national market control authorities.
- The CE mark must not be confused with a conformity marking.

Technical information
Product standards and certifications

European Directives

For electrical equipment, only conformity to standards signifies that the product is suitable for its designated function, and only the guarantee of an established manufacturer can provide a high level of quality assurance.
For Schneider Electric brand products, one or several Directives are likely to be applicable, depending on the product, and in particular:

- the Low Voltage Directive 2006/95/EC: the CE mark relating to this Directive has been compulsory since 16th January 2007.
- the Electromagnetic Compatibility Directive 89/336/EEC, amended by Directives 92/31/EEC and 93/68/EEC: the CE mark on products covered by this Directive has been compulsory since 1st January 1996.

ASEFA-LOVAG certification

The function of ASEFA (Association des Stations d'Essais Française d'Appareils électriques - *Association of French Testing Stations for Low Voltage Industrial Electrical Equipment)* is to carry out tests of conformity to standards and to issue certificates of conformity and test reports.
ASEFA laboratories are authorised by the French authorisation committee (COFRAC).
ASEFA is now a member of the European agreement group LOVAG (Low Voltage Agreement Group). This means that any certificates issued by LOVAG/ASEFA are recognised by all the authorities which are members of the group and carry the same validity as those issued by any of the member authorities.

Quality labels

When components can be used in domestic and similar applications, it is sometimes recommended that a "Quality label" be obtained, which is a form of certification of conformity.

Code	Quality label	Country
CEBEC	Comité Electrotechnique Belge	Belgium
KEMA-KEUR	Keuring van Electrotechnische Materialen	Netherlands
NF	Union Technique de l'Electricité	France
ÖVE	Österreichischer Verband für Electrotechnik	Austria
SEMKO	Svenska Electriska Materiel Kontrollanatalten	Sweden

Product certifications

In some countries, the certification of certain electrical components is a legal requirement. In this case, a certificate of conformity to the standard is issued by the official test authority.
Each certified device must bear the relevant certification symbols when these are mandatory:

Code	Certification authority	Country
CSA	Canadian Standards Association	Canada
UL	Underwriters Laboratories	USA
CCC	China Compulsory Certification	China

Note on certifications issued by the Underwriters Laboratories (UL). There are two levels of approval:

"Recognized" ( )
The component is fully approved for inclusion in equipment built in a workshop, where the operating limits are known by the equipment manufacturer and where its use within such limits is acceptable by the Underwriters Laboratories.
The component is not approved as a "Product for general use" because its manufacturing characteristics are incomplete or its application possibilities are limited.
A "Recognized" component does not necessarily carry the certification symbol.

"Listed" (UL)
The component conforms to all the requirements of the classification applicable to it and may therefore be used both as a "Product for general use" and as a component in assembled equipment. A "Listed" component must carry the certification symbol.

Marine classification societies

Prior approval (= certification) by certain marine classification societies is generally required for electrical equipment which is intended for use on board merchant vessels.

Code	Classification authority	Country
BV	Bureau Veritas	France
DNV	Det Norske Veritas	Norway
GL	Germanischer Lloyd	Germany
LR	Lloyd's Register	Great Britain
NKK	Nippon Kaiji Kyokaï	Japan
RINA	Registro Italiano Navale	Italy
RRS	Register of Shipping	Russia

Note: *for further details on a specific product, please refer to the "Characteristics" pages in this catalogue or consult your Regional Sales Office.*

Technical information

Protective treatment of equipment according to climatic environment

Depending on the climatic and environmental conditions in which the equipment is placed, Schneider Electric can offer specially adapted products to meet your requirements.

In order to make the correct choice of protective finish, two points should be remembered:
- the prevailing climate of the country is never the only criterion,
- only the atmosphere in the immediate vicinity of the equipment need be considered.

All climates treatment “TC”

This is the standard treatment for Schneider-electric brand equipment and is suitable for the vast majority of applications. It is the equivalent of treatments described as “Klimafest”, “Climateproof”.
In particular, it meets the requirements specified in the following publications:
- Publication UTE C 63-100 (method I), successive cycles of humid heat at:
+40 °C and 95 % relative humidity.
- DIN 50016 - Variations of ambient conditions within a climatic chamber:
+23 °C and 83 % relative humidity,
+40 °C and 92 % relative humidity.

It also meets the requirements of the following marine classification societies:
BV-LR-GL-DNV-RINA.

Characteristics

- Steel components are usually treated with zinc. When they have a mechanical function, they may also be painted.
- Insulating materials are selected for their high electrical, dielectric and mechanical characteristics.
- Metal enclosures have a stoved paint finish, applied over a primary phosphate protective coat, or are galvanised (e.g. some prefabricated busbar trunking components).

Limits for use of “TC” (All climates) treatment

- “TC” treatment is suitable for the following temperatures and humidity:

Temperature (°C)	Relative humidity (%)
20	95
40	80
50	50

“TC” treatment is therefore suitable for all latitudes and in particular tropical and equatorial regions where the equipment is mounted in normally ventilated industrial premises. Being sheltered from external climatic conditions, temperature variations are small, the risk of condensation is minimised and the risk of dripping water is virtually non-existent.

Extension of use of “TC” (All climates) treatment

In cases where the humidity around the equipment exceeds the conditions described above, or in equatorial regions if the equipment is mounted outdoors, or if it is placed in a very humid location (laundries, sugar refineries, steam rooms, etc.), “TC” treatment can still be used if the following precautions are taken:
- The enclosure in which the equipment is mounted must be protected with a “TH” finish (see next page) and must be well ventilated to avoid condensation and dripping water (e.g. enclosure base plate mounted on spacers).
- Components mounted inside the enclosure must have a “TC” finish.
- If the equipment is to be switched off for long periods, a heater must be provided (0.2 to 0.5 kW per square decimetre of enclosure), that switches on automatically when the equipment is turned off. This heater keeps the inside of the enclosure at a temperature slightly higher than the outside surrounding temperature, thereby avoiding any risk of condensation and dripping water (the heat produced by the equipment itself during normal running is sufficient to provide this temperature difference).
- Special considerations for “Operator dialog” and “Detection” products:
for certain pilot devices, the use of “TC” treatment can be extended to outdoor use provided their enclosure is made of light alloys, zinc alloys or plastic material. In this case, it is also essential to ensure that the degree of protection against penetration of liquids and solid objects is suitable for the applications involved.

Technical information
Protective treatment of equipment according to climatic environment

"TH" treatment for hot and humid environments

This treatment is suitable for hot and humid atmospheres where installations are regularly subject to condensation, dripping water and the risk of fungi.

In addition, plastic insulating components are resistant to attacks from insects such as termites and cockroaches. These properties have often led to this treatment being described as "Tropical Finish", but this does not mean that all equipment installed in tropical and equatorial regions must systematically have undergone "TH" treatment. On the other hand, certain operating conditions in temperate climates may well require the use of "TH" treated equipment (see limitations for use of "TC" treatment).

Special characteristics of "TH" treatment

■ All insulating components are made of materials which are either resistant to fungi or treated with a fungicide, and which have increased resistance to creepage (Standards IEC 60112, NF C 26-220, DIN 5348).
■ Metal enclosures receive a top-coat of stoved, fungicidal paint, applied over a rust inhibiting undercoat. Components with "TH" treatment may be subject to a surcharge (1). Please consult your Regional Sales Office.

Protective treatment selection guide

Surrounding environment	Duty cycle	Internal heating of enclosure when not in use	Type of climate	Protective treatment	
				of equipment	of enclosure
Indoors					
No dripping water or condensation	Unimportant	Not necessary	Unimportant	"TC"	"TC"
Presence of dripping water or condensation	Frequent switching off for periods of more than 1 day	No	Temperate	"TC"	"TH"
			Equatorial	"TH"	"TH"
		Yes	Unimportant	"TC"	"TH"
	Continuous	Not necessary	Unimportant	"TC"	"TH"
Outdoors (sheltered)					
No dripping water or dew	Unimportant	Not necessary	Temperate	"TC"	"TC"
			Equatorial	"TH"	"TH"
Exposed outdoors or near the sea					
Frequent and regular presence of dripping water or dew	Frequent switching off for periods of more than 1 day	No	Temperate	"TC"	"TH"
			Equatorial	"TH"	"TH"
		Yes	Unimportant	"TC"	"TH"
	Continuous	Not necessary	Unimportant	"TC"	"TH"

These treatments cover, in particular, the applications defined by methods I and II of guide UTE C 63-100.

Special precautions for electronic equipment

Electronic products always meet the requirements of "TC" treatment. A number of them are "TH" treated as standard.

Some electronic products (for example: programmable controllers, flush mountable controllers CCX and flush mountable operator terminals XBT) require the use of an enclosure providing a degree of protection to at least IP 54, as defined by standards IEC 60664 and NF C 20 040, for use in industrial applications or in environmental conditions requiring "TH" treatment.

These electronic products, including flush mountable products, must have a degree of protection to at least IP 20 (provided either by their own enclosure or by their installation method) for restricted access locations where the degree of pollution does not exceed 2 (a test booth not containing machinery or other dust producing activities, for example).

Special treatments

For particularly harsh industrial environments, Schneider Electric is able to offer special protective treatments. Please consult your Regional Sales Office.

(1) A large number of the Schneider electric brand products are "TH" treated as standard and are, therefore, not subject to a surcharge.

Technical information

Degrees of protection provided by enclosures

IP code

Degrees of protection against the penetration of solid bodies, water and personnel access to live parts

The European standard EN 60529 dated October 1991, IEC publication 529 (2nd edition - November 1989), defines a coding system (IP code) for indicating the degree of protection provided by electrical equipment enclosures against accidental direct contact with live parts and against the ingress of solid foreign objects or water. This standard does not apply to protection against the risk of explosion or conditions such as humidity, corrosive gasses, fungi or vermin.
Certain equipment is designed to be mounted on an enclosure which will contribute towards achieving the required degree of protection (example : control devices mounted on an enclosure).
Different parts of an equipment can have different degrees of protection (example : enclosure with an opening in the base).
Standard NF C 15-100 (May 1991 edition), section 512, table 51 A, provides a cross-reference between the various degrees of protection and the environmental conditions classification, relating to the selection of equipment according to external factors.
Practical guide UTE C 15-103 shows, in the form of tables, the characteristics required for electrical equipment (including minimum degrees of protection), according to the locations in which they are installed.

IP ●●● code

The IP code comprises **2 characteristic numerals** (e.g. **IP 55**) and may include **an additional letter** when the actual protection of personnel against direct contact with live parts is better than that indicated by the first numeral (e.g. IP 20C).
Any characteristic numeral which is unspecified is replaced by an X (e.g. IP XXB).

1st characteristic numeral

corresponds to protection of the equipment against penetration of solid objects and protection of personnel against direct contact with live parts.

	Protection of the equipment		Protection of personnel
0	Non-protected		Non-protected
1		Protected against the penetration of solid objects having a diameter greater than or equal to 50 mm	Protected against direct contact with the back of the hand (accidental contacts).
2	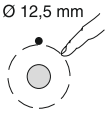	Protected against the penetration of solid objects having a diameter greater than or equal to 12.5 mm.	Protected against direct finger contact.
3	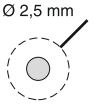	Protected against the penetration of solid objects having a diameter greater than or equal to 2.5 mm.	Protected against direct contact with a Ø2.5 mm tool.
4	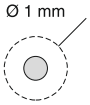	Protected against the penetration of solid objects having a diameter greater than or equal to 1 mm.	Protected against direct contact with a Ø1 mm wire.
5	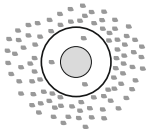	Dust protected (no harmful deposits).	Protected against direct contact with a Ø1 mm wire.
6	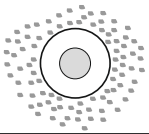	Dust tight.	Protected against direct contact with a Ø1 mm wire.

2nd characteristic numeral

corresponds to protection of the equipment against penetration of water with harmful effects.

0	Non-protected	
1		Protected against vertical dripping water, (condensation).
2	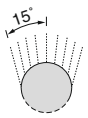	Protected against dripping water at an angle of up to 15°.
3	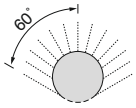	Protected against rain at an angle of up to 60°.
4	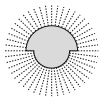	Protected against splashing water in all directions.
5	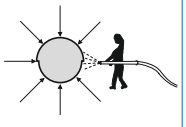	Protected against water jets in all directions.
6	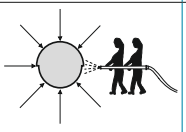	Protected against powerful jets of water and waves.
7	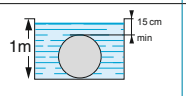	Protected against the effects of temporary immersion.
8	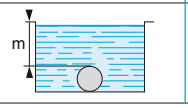	Protected against the effects of prolonged immersion under specified conditions.

Additional letter

corresponds to protection of personnel against direct contact with live parts.

A	With the back of the hand.
B	With the finger.
C	With a Ø2.5 mm tool.
D	With a Ø1 mm wire.

Technical information

Degrees of protection provided by enclosures

IK code

Degrees of protection against mechanical impact

The European standard EN 50102 dated March 1995 defines a coding system (IK code) for indicating the degree of protection provided by electrical equipment enclosures against external mechanical impact.
Standard NF C 15-100 (May 1991 edition), section 512, table 51 A, provides a cross-reference between the various degrees of protection and the environmental conditions classification, relating to the selection of equipment according to external factors.
Practical guide UTE C 15-103 shows, in the form of tables, the characteristics required for electrical equipment (including minimum degrees of protection), according to the locations in which they are installed.

IK ●● code

The IK code comprises **2 characteristic numerals** (e.g. **IK 05**).

2 characteristic numerals

corresponding to a value of impact energy.

		h (cm)	Energy (J)
00	Non-protected		
01	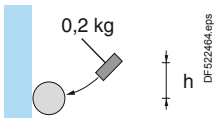	7.5	0.15
02		10	0.2
03		17.5	0.35
04		25	0.5
05		35	0.7
06	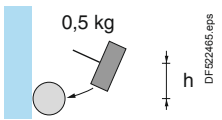	20	1
07		40	2
08	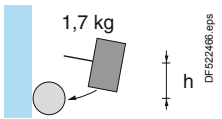	30	5
09	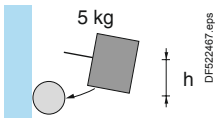	20	10
10		40	20

Part B Components
For customer made solutions

Type of product	Range	Product views	Page
Power busbar systems: Linergy BZ, HK	Up to **630 A**		B1/1
Motor starter wiring systems		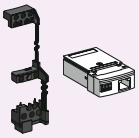	B2/1
Switch-disconnectors: TeSys Vario	Up to **175 A**		B3/1
Fuse carriers: TeSys DF, LS, GK	Up to **125 A**		B4/1
Switch-disconnectors fuses: TeSys GS	Up to **1250 A**		B5/1
Circuit breakers: TeSys GV, GB	Up to **250 kW**		B6/1
Control relays: TeSys SK, K, D			B7/1
Contactors: TeSys SK, K, D, SKGC, GC, GY, GF	Up to **200 A**		B8/1
High power contactors: TeSys F, V, FG, CR1F	Up to **2100 A**		B9/1
Bar mounted contactors: TeSys B	Up to **16300 A**	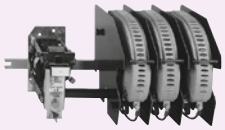	B10/1
Overload relays: TeSys LRx (for TeSys K, D, F) TeSys RM1X, LR97, LT47	Up to **630 A**	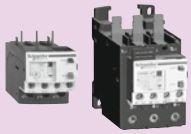	B11/1
Motor management systems: TeSys U, T	Up to **800 A**		B12/1

Power busbar systems
Linergy BZ and HK

Chapter B1

Busbar systems for electrical distribution and motors starters

Type of product	Range		Pages
Presentation Linergy BZ			B1/2
Multistandard power busbar Linergy BZ	From **160** to **630** A	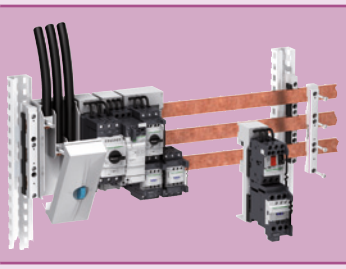	B1/4
Presentation Linergy HK			B1/10
Multistandard hot-plug distribution system Linergy HK	Up to **160** A	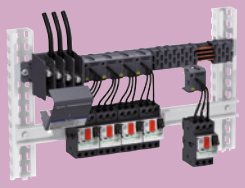	B1/12

Technical Data for Designers B1/17

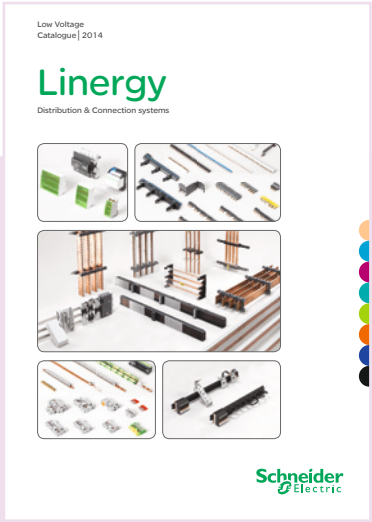

All Schneider Electric **distribution and connection systems** are brought together into a single brand name: **Linergy**

- Distribution blocks
- Device feeders
- Power busbars
- Hot plug busbar system
- Terminal blocks and bars.

Catalogue reference: **LVYED13001EN**

Linergy BZ, Multistandard power busbar system

Application: electrical distribution, up to 630 A

In enclosures, when space saving and fast connection are a strong requirement

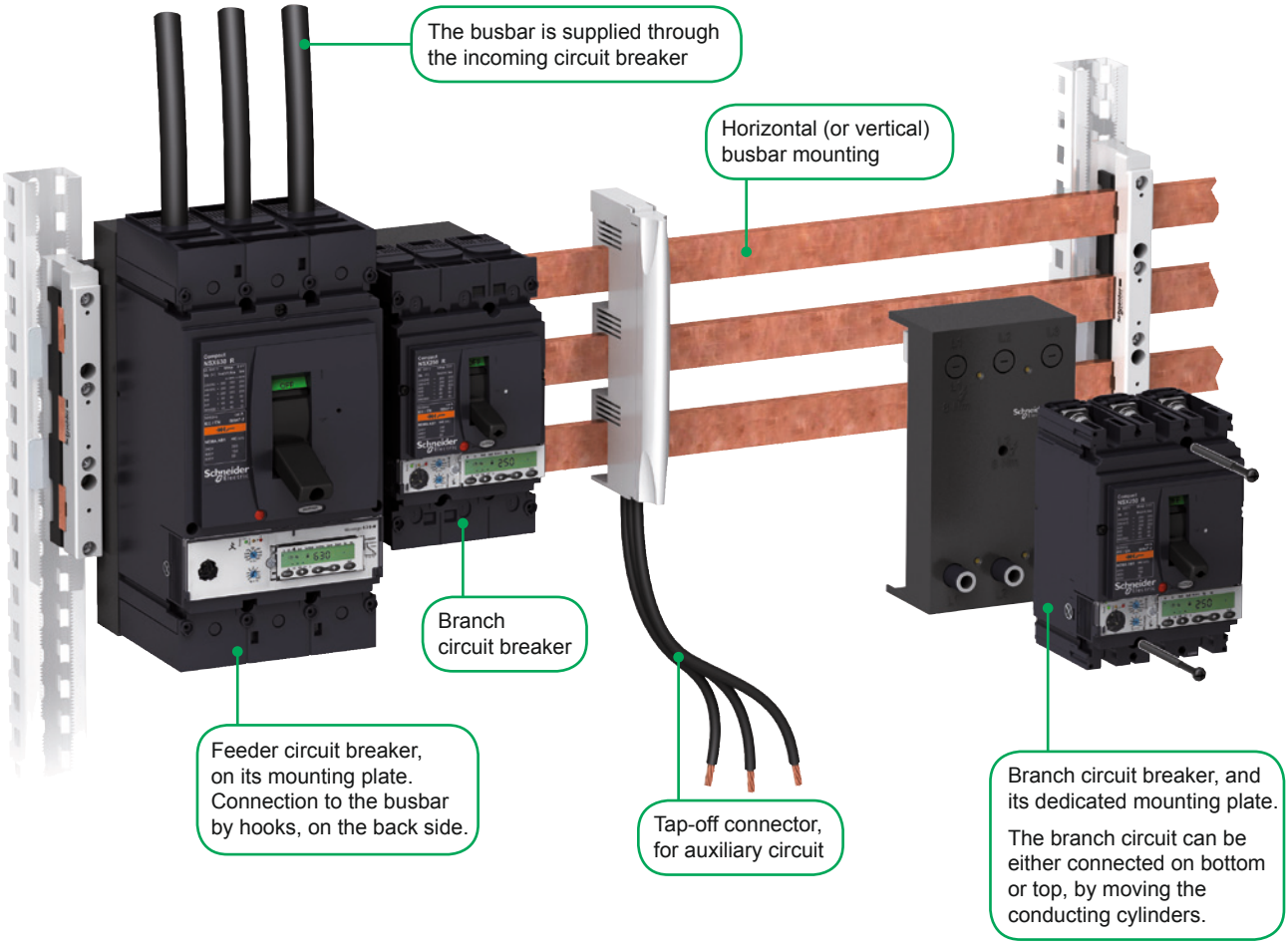

Ideal for industrial process application

Advantages

- Considerable space saving: components are directly mounted on the busbar
- Quick connection, deconnection: a metal hook combines mechanical fastening and electrical connection
- Multi standard: conform to IEC and UL standards

Detailed view: back face of a mounting plate

- Mounting plates, for Compact NSX, Powerpact and GV7 circuit breakers
- Compatible with bars:
  - Height 12, 15, 20, 25 or 30 mm,
  - Width 5 or 10 mm

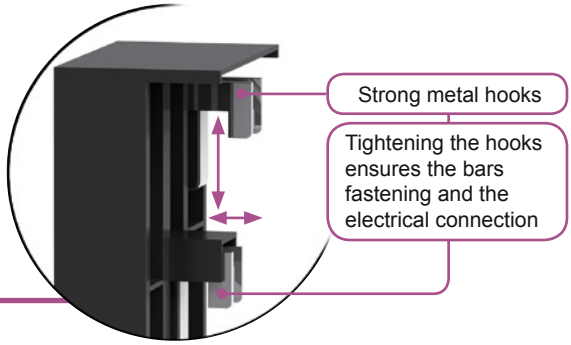

Linergy BZ, Multistandard power busbar system

Application: power distribution to motor starters

In control switchboards, when space saving, quick mounting and replacement are required

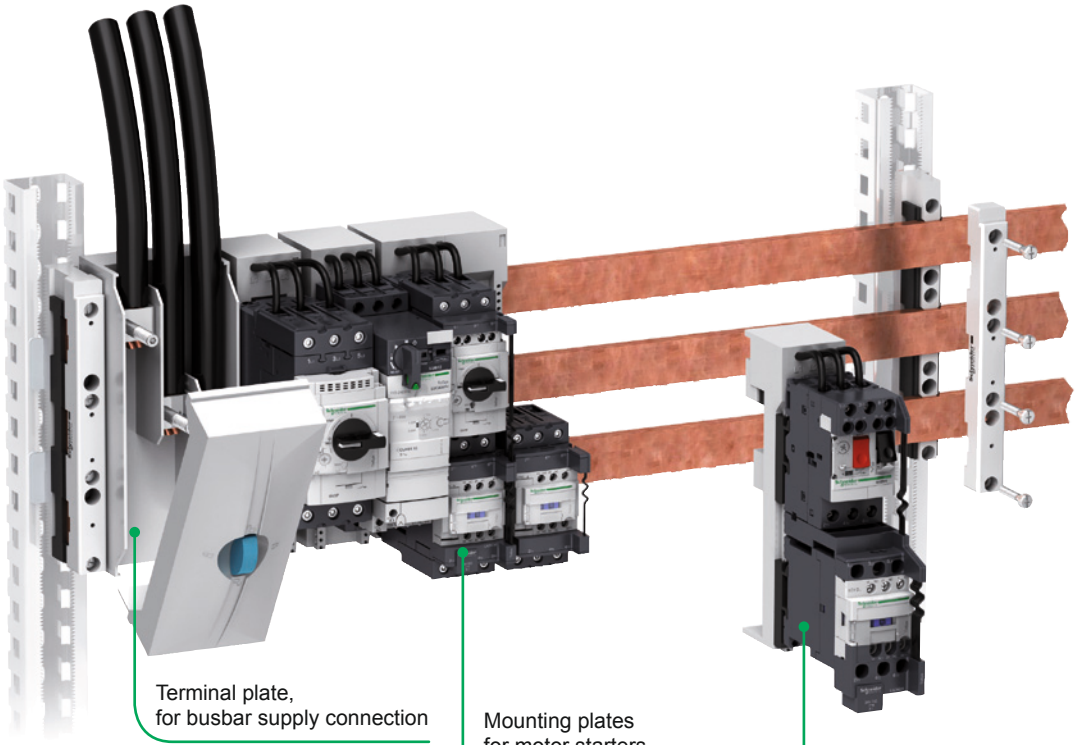

Advantages

- Considerable space saving: components are directly mounted on the busbar
- Large choice of mounting plates (for GV2, GV3 motor circuit breakers and assemblies, GV7, TeSys U)
- Quick connection, deconnection (power off): clip-on mounting plates
- Vibration resistant busbar connections: no periodical re-tightening required

Detailed view: back face of a motor starter mounting plate

- A reliable electrical contact is ensured by copper blades
- The blue part locks the mounting plate on the busbar, compatibility is provided with the standard profiles:
  - Height 12, 15, 20, 25 or 30 mm,
  - Width 5 or 10 mm

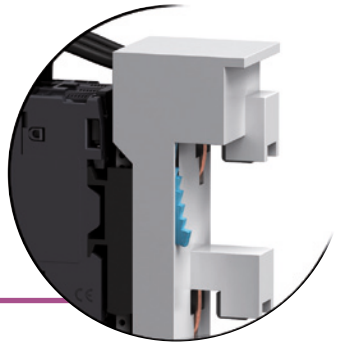

DB400244.eps

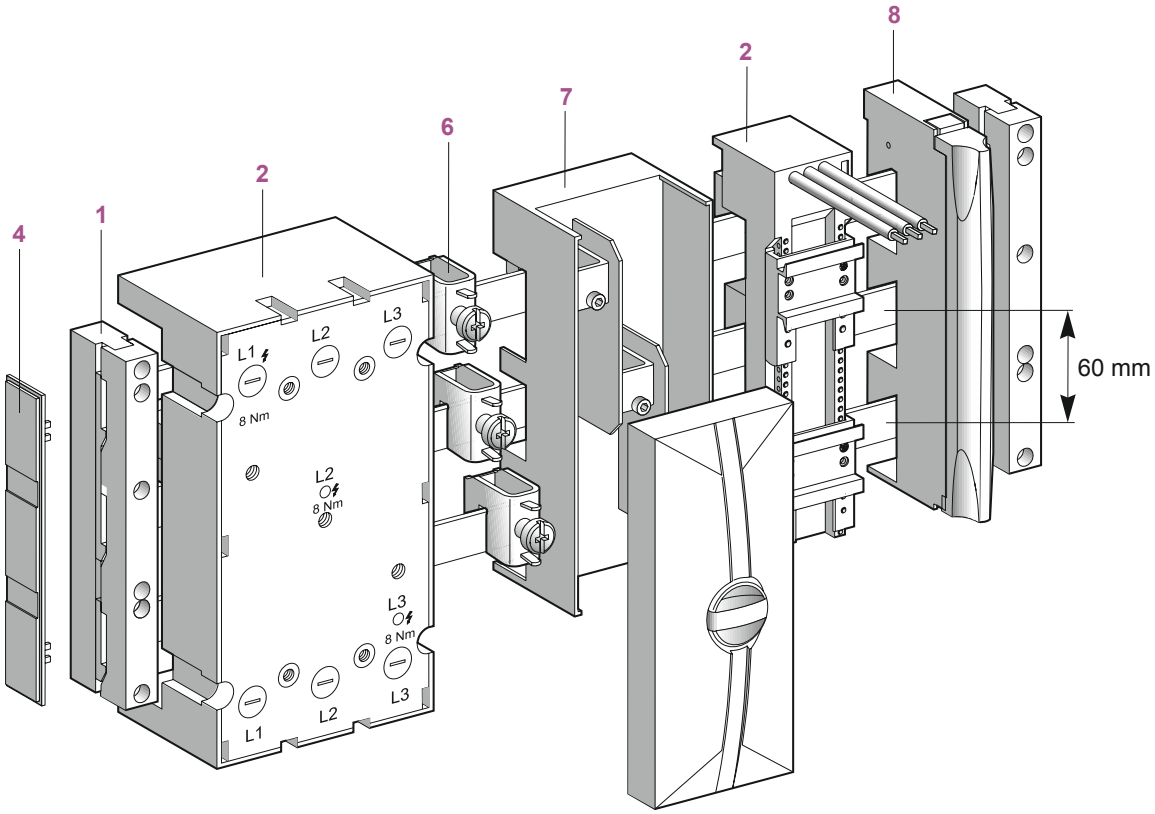

DB400245.eps

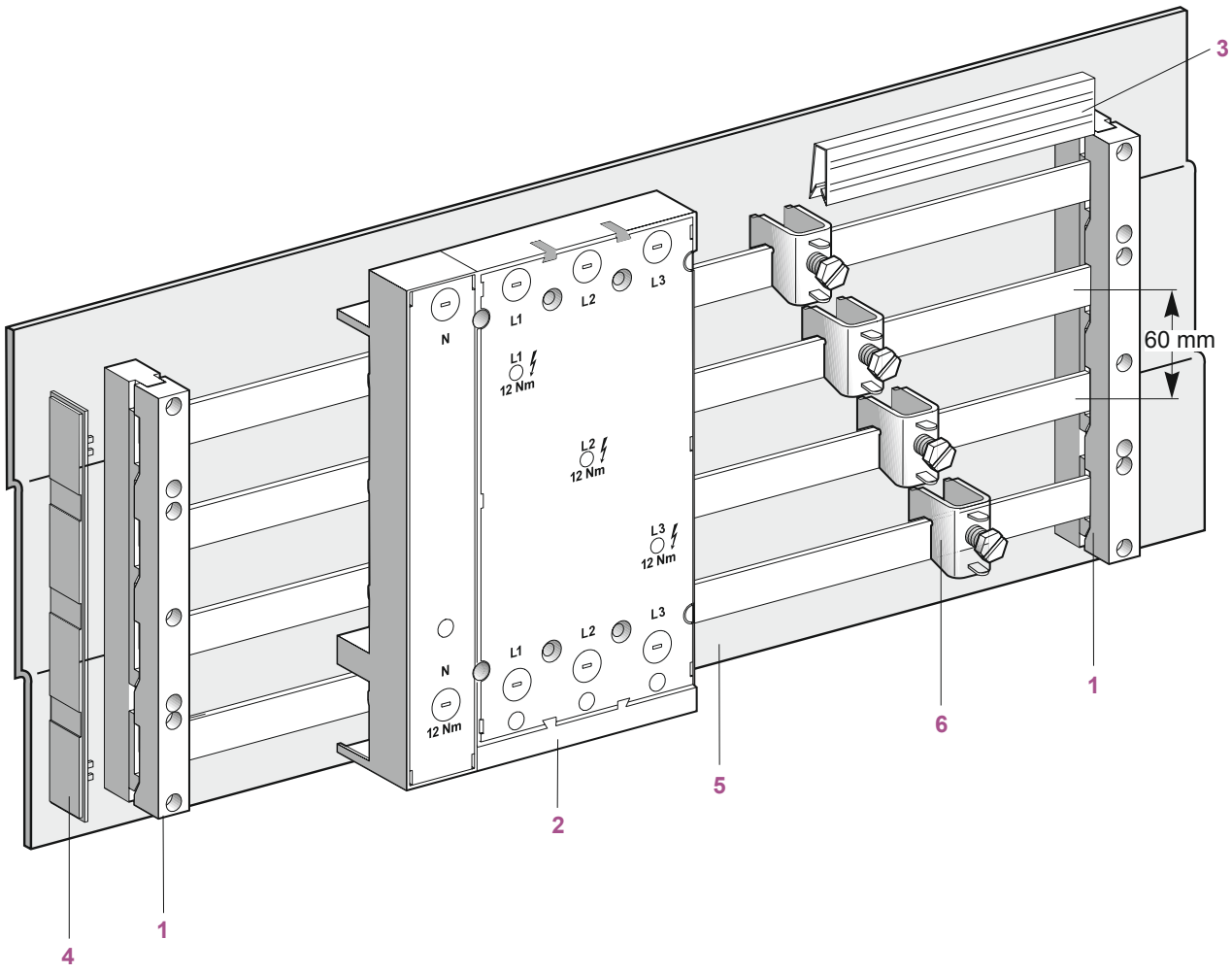

TeSys starters and bare devices
Plates for mounting on 60 mm busbar

Linergy BZ

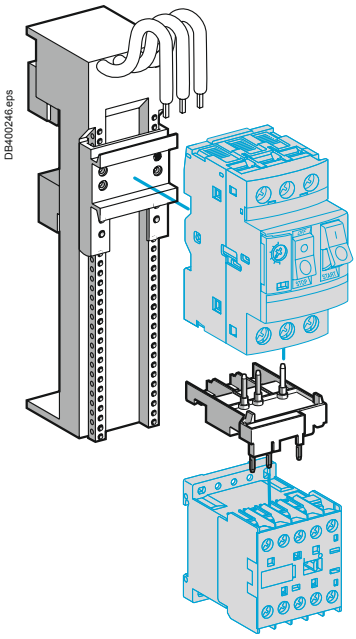

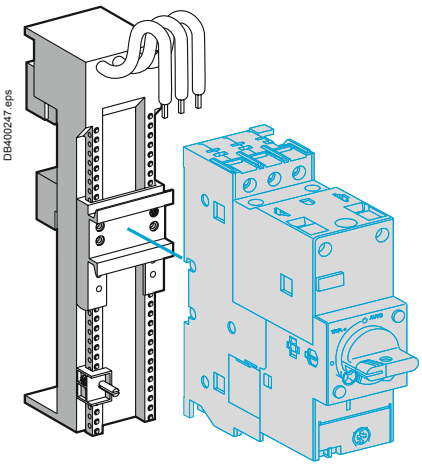

Installation examples.

Description

The TeSys mounting plate system for busbars simplifies the installation of motor feeder components used in your electrical installations.
Power distribution is performed by a busbar.

The mounting plates are fitted directly on this busbar, by snap-on mounting, thus implementing mechanical and electrical connection.

This system offers numerous benefits:
- space saving in cabinets
- fast, safe and reliable electrical and mechanical connection
- easy connection
- protection for users against electric shocks by direct contacts (IP20) by using busbars end covers
- equipment flexibility and modularity
- increased equipment availability: easier maintenance
- power supply without drilling (connectors) from 1.5 to 120 mm^2.

Busbars system
The busbar interaxis is 60 mm. Depending on the cross section of the bars, the busbar can withstand a maximum current of 630 A.

Note: *The bars forming the busbar are not part of the TeSys LA9Z offer. They are not supplied by us. Their selection depends on the maximum current needed for your installation (see next page).*

Support for 3P and 4P busbar (1)
These are available in 2 versions: three-pole and four-pole.
For applications having to comply with the UL standard, use the LA9ZX01508 support (3P only).

The mounting plates (2)
These allow mounting of the power feeder components consisting of:
- a GV2 motor circuit breaker, mounted alone or in conjunction with a TeSys K or TeSys D contactor
- a GV3 motor circuit breaker, mounted alone or in conjunction with a TeSys D contactor
- a TeSys U starter-controller
- a TeSys GV7 motor circuit breaker
- an LD63 integral contactor-circuit breaker
- a NSX100-250 or NSX400-630 A circuit breaker
- H/J/L PowerPact circuit breaker frame.

Accessories
Accessories complete the offer:
- covers (3) for 5 and 10 mm bars
- end covers (4)
- a base plate (5)
- 1P connectors (6)
- 3P connectors on mounting plate (7)
- a spring terminal 3P connection module (8).

TeSys starters and bare devices
Busbar support

Linergy BZ

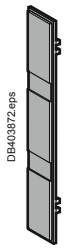

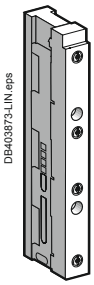

LA9ZX01573 *LA9ZX01495*

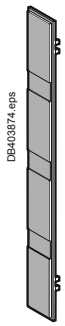

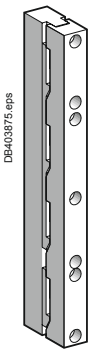

LA9ZX01131 *LA9ZX01485*

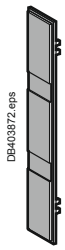

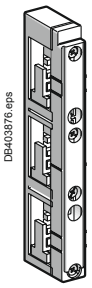

LA9ZX01573 *LA9ZX01508*

IEC busbar supports and accessories

		Min. order qty	Unit reference
3-pole	For 12, 15, 20, 25, 30 x 5/10 mm busbars	10	**LA9ZX01495**
	End covers for 3-pole busbar support	10	**LA9ZX01573**
4-pole	For 12, 15, 20, 25, 30 x 5/10 mm busbars	10	**LA9ZX01485**
	End covers for 4-pole busbar support (5 left, 5 right)	10	**LA9ZX01131**

UL busbar supports and accessories

		Min. order qty	Unit reference
3-pole	For 12, 20, 30 x 5/10 mm busbars	10	**LA9ZX01508**
	Base plate 240 x 700	2	**LA9ZX01515**
	End covers for busbar support	10	**LA9ZX01573**

Other accessories

		Min. order qty	Unit reference
Covers, length 1 m			
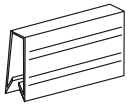	For 12-30 x 5 mm busbars	10	**LA9ZX01244**
	For 12-30 x 10 mm busbars	10	**LA9ZX01245**

TeSys starters and bare devices
Choice of mounting plates

Linergy BZ

PB112427_R.eps



LA9ZA32627

PB103841_R.eps



LV429372

PB103841_R.eps



LA9ZA32600

PB112432_R.eps



LV432624

For TeSys integral contactor-circuit breakers

Operating current AC-3 440 V	Protection by contactor-circuit breaker	Mounting plate l x h x d	Min. order qty	Unit reference
Mounting plate, 1-way				
63 A	LD1, LD4 LD●	108 x 260 x 63	1	**LA9ZA32627**

For TeSys GV7 motor circuit breakers

Operating current AC-3 440 V	Protection by contactor-circuit breaker	Mounting plate l x h x d	Min. order qty	Unit reference
Mounting plate, 1-way				
80 A	GV7	104 x 190 x 63	1	**LV429372**

For Compact NSX circuit breakers

Ratings		Mounting plate l x h x d	Min. order qty	Unit reference
100-250 A	Mounting plate for 3P circuit breakers	104 x 190 x 63	1	**LV429372**
	Mounting plate for 4P circuit breakers	139 x 251 x 63	1	**LV429373**
400-630 A	Mounting plate for 3P circuit breakers	139 x 270 x 63	1	**LV432623**
	Mounting plate for 4P circuit breakers	184 x 284 x 63	1	**LV432624**

For PowerPact 3P circuit breakers

Ratings		Mounting plate l x h x d	Min. order qty	Unit reference
60-100-150 A	Mounting plate for H frame circuit breakers	104 x 190 x 63	1	**LA9ZA32600**
250 A	Mounting plate for J frame circuit breakers	104 x 190 x 63	1	**LV429372**
250-400-600 A	Mounting plate for L frame circuit breakers	139 x 270 x 63	1	**LV432623**

Characteristics of busbar mounting plates

Type of mounting plate		LA9ZA32621 LA9ZA32622	LA9ZA32427 LA9ZA32428 LA9ZA32434 LA9ZA32623 LA9ZA32442 LA9ZA32443	LA9ZA32624 LA9ZA32625 LA9ZA32626 LA9ZA32627	LV429372 LV429373	LV432623 LV432624	LA9ZA32600
Degree of protection as per IEC 60529	IP	20					
Rated insulation voltage	V	690					
Permissible current	A	25	32	63	80-100-250	400-630	60-100-150
Peak rated current	kA	50	50 (1)	50	50	50	50
SCCR (UL) with Compact NSX circuit breaker protection	mm²	The reinforced breaking capacity due to cascading in circuit breaker combination is maintained					
Conductor cross section (color: black)	mm²	4	6	10	NA		
	AWG	12	10	8	NA		
Type of conductor insulating material	PVC	105°			NA		

(1) 35 kA with LUB12 for LA9ZA32427 and LA9ZA32428.

TeSys starters and bare devices
Choice of mounting plates

Linergy BZ



LA9ZA32443, LA9ZA32621



LA9ZA32434, LA9ZA32442

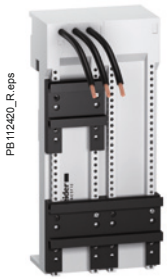

LA9ZA32622

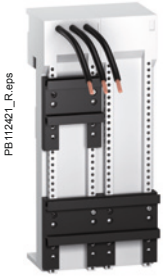

LA9ZA32623



LA9ZA32427



LA9ZA32428



LA9ZA32624



LA9ZA32625



LA9ZA32626

For TeSys GV2 motor circuit breakers

Operating current AC-3 440 V	Protection by motor circuit breaker	For contactor	Mounting plate l x h x d	Min. order qty	Unit reference
Mounting plate, 1-way					
25 A	GV2 ME GV2 P GV2 LE	LC1 D LC1 K LP4 K06-K12	45 x 200 x 63	4	**LA9ZA32621**
32 A	GV2 LE		63 x 200 x 63	4	**LA9ZA32443**
Mounting plate, 2-way (3)					
25 A	GV2 ME GV2 P GV2 LE	LC1 D LC1 K LP4 K06-K12	90 x 200 x 63	2	**LA9ZA32622**
32 A	GV2 ME GV2 P GV2 LE	LC1 D	45 x 200 x 63	4	**LA9ZA32434**
			54 x 200 x 63	4	**LA9ZA32442**
			90 x 200 x 63	2	**LA9ZA32623**

TeSys U starter-controllers

Operating current AC-3 440 V	Protection by power base	Mounting plate l x h x d	Min. order qty	Unit reference
Mounting plate, 1-way				
32 A	LUB12, LUB32	45 x 200 x 63	4	**LA9ZA32427**
Mounting plate, 2-way				
32 A	LUB12, LUB32	45 x 260 x 63	4	**LA9ZA32428**

For TeSys GV3 motor circuit breakers

Operating current AC-3 440 V	Protection by power base	For contactor	Mounting plate l x h x d	Min. order qty	Unit reference
Mounting plate, 1-way (1)					
63 A	GV3 P	–	54 x 200 x 63	4	**LA9ZA32624**
	GV3 P	LC1 D40A…65 A	54 x 260 x 63	4	**LA9ZA32625**
Mounting plate, 2-way (1) (2)					
63 A	GV3 P	LC2 D40A…65 A	117 x 260 x 63	4	**LA9ZA32626**

(1) Contactor-circuit breaker combination without additional part.
(2) Use the LAD 9R3 kit for the execution of changeover contactors.
(3) Use the LAD 9R1 or LAD 9R1V kit for the execution of changeover contactors.

***Note:** the mounting plate rails can be shifted vertically in 1.25 mm increments.*

TeSys starters and bare devices
Terminals, connection module

Linergy BZ



LA9ZX01285



LA9ZX01287

Terminals

	I max		Set of	Unit reference
One-pole for flat bars, 5 mm	270 A	Capacity 4-35 mm²	50	LA9ZX01285
	400 A	Capacity 16-70 mm²	25	LA9ZX01287
3P cover, width 84 mm			10	LA9ZX01413



LA9ZX01413



LA9ZX01243

Terminals on mounting plate

	I max		Min. order qty	Unit reference
3P, on mounting plate + cover, for 12 x 5 to 30 x 10 busbars, width 81 mm	440 A	Capacity 35-120 mm²	1	LA9ZX01243
3P, on mounting plate + cover, for 20 x 5 to 30 x 10 busbars, width 135 mm	560 A	Capacity 120-300 mm²	1	LA9ZX01754



LA9ZX01563

Connection module

	I max		Min. order qty	Unit reference
3P, spring terminal connection + cover, for 12 x 5 to 30 x 10 busbars, width 20 mm	80 A	Capacity 1.5-16 mm²	8	LA9ZX01563

Connection by connectors

		LA9ZX01285		LA9ZX01287		LA9ZX01243		LA9ZX01563		LA9ZX01754	
		Min.	Max.	Min.	Max.	Min.	Max.	Min.	Max.	Min.	Max.
Flexible wire	mm²	4	35	16	70	35	120	1.5	16	120	300
Multi-strand wire	mm²	4	35	16	70	35	120	1.5	16	120	300
Rigid wire	mm²	4	35	–	–	–	–	1.5	16	-	-
Tightening torque	N.m	... x 5		... x 5		... x 5-10		... x 5-10		... x 5-10	
Cover		LA9ZX01413		LA9ZX01413		Supplied without cover		Supplied without cover		Supplied without cover	

Linergy HK, Multistandard hot-plug busbar system

Application: electrical distribution, up to 160 A

Hot-plug distribution: when continuity of service is required

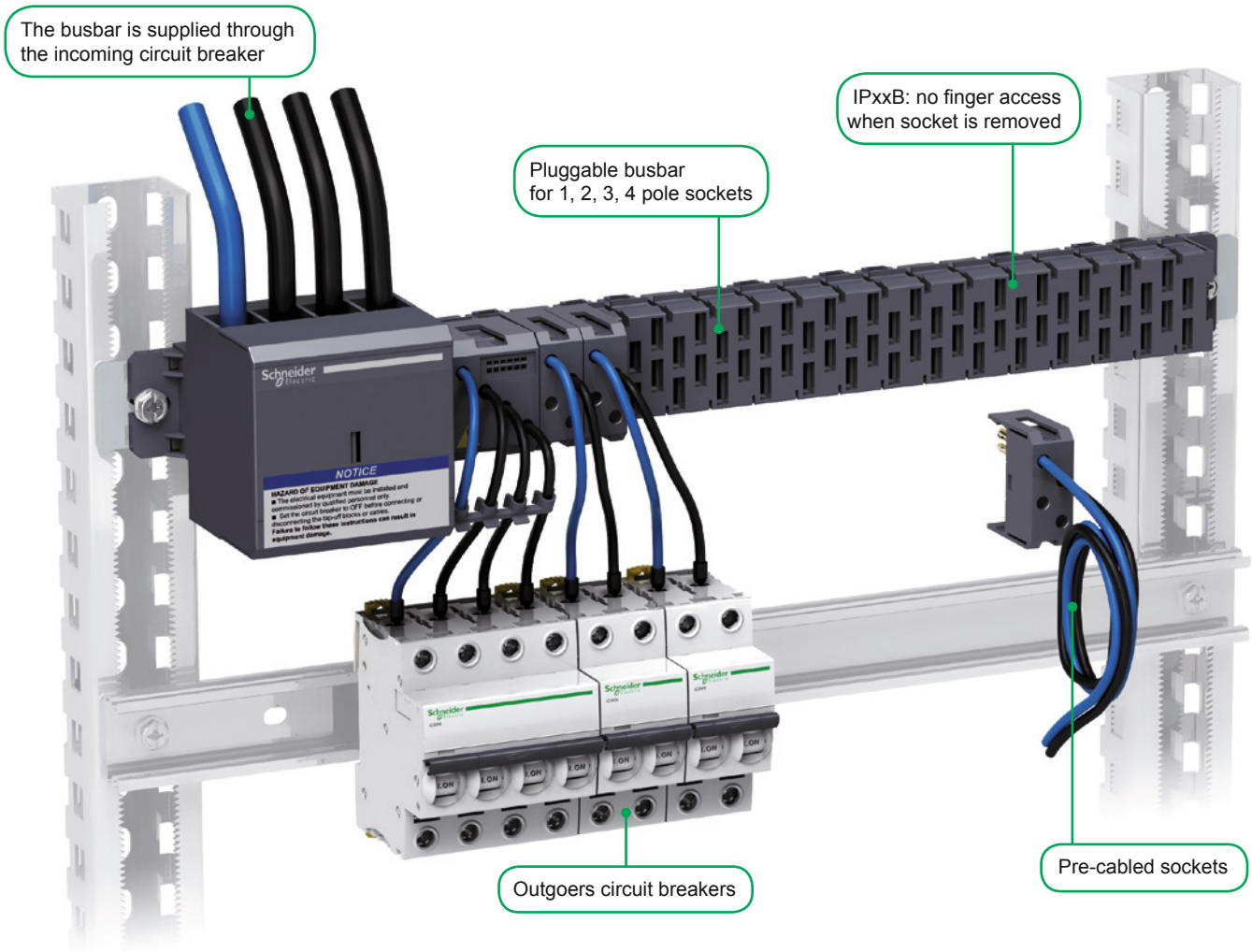

Advantages

- Considerable time saving: stand alone busbar, fixed to the chassis with 2 screws
- Preserved continuity of service during modification: live connection, disconnection (off load)
- Wide adaptability: 6 busbar lengths from 344 to 1100 mm, 12 models of sockets
- Multi standard: conform to IEC and UL standards

Detailed view: pre cabled socket

- The assembling process and the technological choices ensure a long-lasting reliability
- Each wire is welded on a spring clip providing robustness to the socket and vibration resistant contacts



Linergy HK, Multistandard hot-plug busbar system

Application: electrical distribution to motor starters

When compactness and continuity of service are required

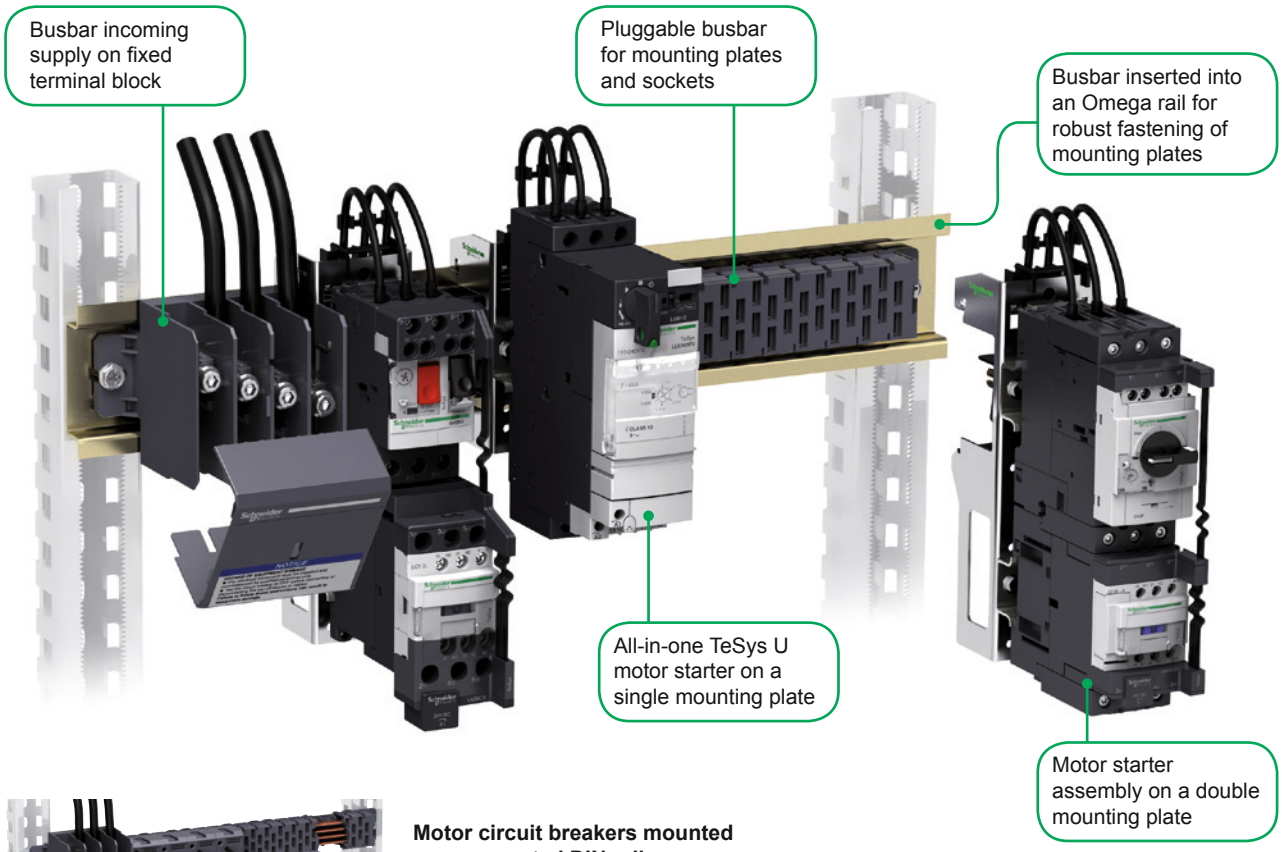

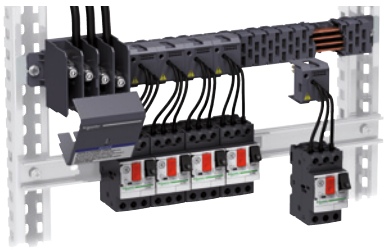

Motor circuit breakers mounted on a separated DIN rail.

Advantages

- Space saving in compact enclosures: the total volume is reduced to that of the motor starter assemblies
- Preserved continuity of service during modification and maintenance: live connection, disconnection (off load)
- Wide adaptability: 6 busbar lengths from 344 to 1100 mm, 12 models of sockets, 23 mounting plates for motor starters up to 25 or 50 A

Detailed view: mounting plate back face

- Thanks to the plug and its pre-cabled wires the motor starter is safely assembled in the workshop, for immediate or later use.
- A piece of DIN profile rail is attached on the front face of the mounting plate for fastening the components.
- The metal mounting plate ensures a rigid and robust fastening on the omega rail.

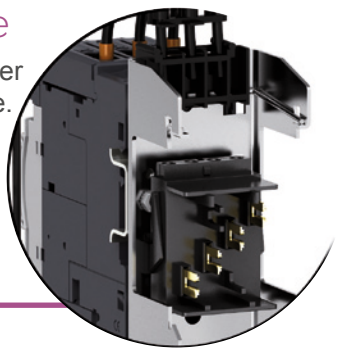

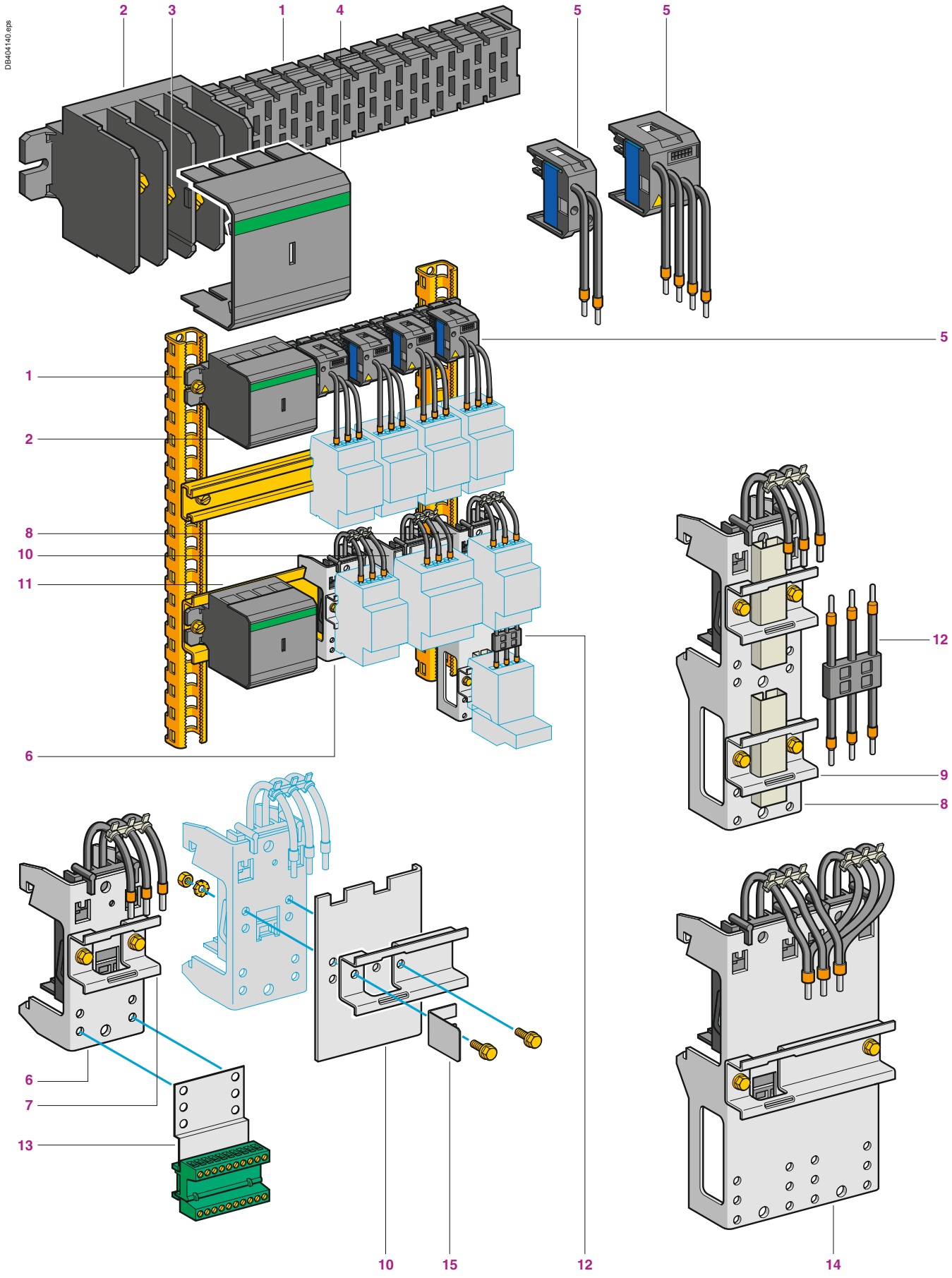
DB404140.eps
2
3
1
4
5
5
5
1
2
8
10
11
6
12
9
8
6
7
13
10
15
12
14

Power distribution in control panels
Pre-assembled busbar system

Linergy HK

The assembly of automated control and distribution panels requires the use of products that are not only safe but also simple and quick to mount and cable.

The Linergy HK pre-assembled busbar system meets all these criteria by incorporating prefabricated components which cater for 3 principal functions:

Carrying of electric current

By the pre-assembled 4-pole busbar system **1**, 160 A at 35 °C.

4-pole busbars can be used for 3-phase + Neutral or 3-phase + Common.

The busbars are available in 6 lengths: 344, 452, 560, 668, 992, 1100 mm.

An incoming supply terminal block **2** is located at the extreme left of the busbar.

"Knock-out" partitions allow connection of the power supply from above or below to connectors **3** which are protected by a removable cover **4**.
Upstream protection of the busbar is shown on page B1/20.

Current distribution

Tap-off units **5** (factory assembled) are available in 4 versions:
- 2-pole,
- 3-pole,
- 4-pole (3-phase + Neutral),
- 4-pole (3-phase + Common).

The tap-offs clip onto the busbar with instantaneous mechanical and electrical connection to the busbars.
2 ratings are available: 16 and 32 A.
The tap-off units ensure not only rapid mounting, but also a neat appearance for the power distribution system and complete safety when accessing under live circuit conditions.

Component mounting

Component mounting plates with incorporated tap-off allow mounting of and supply of power to components.
They are available in 25 A or 50 A ratings.

These mounting plates clip onto the mounting rail **11**, which also supports the busbar, and at the same time make electrical connection via the incorporated tap-off.

2 types of mounting plate are available:
- single plates **6** (height 105 mm), with bolt-on 35 mm wide ⎓ rail **7**, which may be bolted on in one of two positions, allowing height adjustment of 10 mm.
- double plates **8** and **14** (height 190 mm), with two bolt-on, 35 mm wide ⎓ rails **9** mounted on 100 mm fixing centres; each rail may be bolted on in one of 4 positions, allowing height adjustment in 10 mm steps. These plates are supplied with connectors **12** to allow wiring between control and protection devices.

Single mounting plates enable the following types of distribution:
- 2-pole (Ph + N) and (Ph + Ph)
- 3-pole,
- 4-pole (3 Ph + N or 3 Ph + common).

Double mounting plates enable the following types of distribution: 2-pole (Ph + N, Ph + Ph), 3-pole or 4-pole (3Ph+N and 3Ph + common).

Extension plates **10** can be bolted onto single and double mounting plates to enable mounting of wider components. Using a side stop **15** in conjunction with these extension plates also supports the Linergy HK busbar when used vertically.

A control terminal block **13** comprising a support plate bolted onto the single or double mounting plates and a 10-pole plug-in block, enables connection of the control circuit wires (c.s.a. 1.5 mm^2 max).

Characteristics: pages B1/20 and B1/21
References: pages B1/14 and B1/15
Dimensions: pages B1/22 and B1/23
Mounting possibilities: page B1/14

Power distribution in control panels

Pre-assembled busbar system

Linergy HK

PB112406_R.eps



AK5 JB1●●

Busbars

The busbars can be screw-mounted onto any type of support. However. if it is to be used in conjunction with component mounting plates incorporating a tap-off, it is essential that it is mounted on the AM1 DL201 rail.
When mounting tap-offs, the rated operational current of the busbar should be taken into account: 160 A at 35 °C.

Number of conductors	Number of tap-offs at 18 mm intervals	Length	Suitable for mounting in enclosure width	Reference	Weight
		mm	mm		kg
4 (1)	12	344	600	**AK5JB143**	0.700
	18	452	800	**AK5JB144**	0.900
	24	560	800	**AK5JB145**	1.100
	30	668	800	**AK5JB146**	1.300
	48	992	1200	**AK5JB149**	1.900
	54	1100	1200	**AK5JB1410**	2.100

Removable power sockets

Use	Number of points used on the busbar system		Thermal current	Cable lengths	Min. order qty	Unit reference
		Width	A	mm		
Single-phase + Neutral	1	9 mm	16	200	6 (2)	**AK5PC12**
			32	1000	6 (2)	**AK5PC32L**
2-phase	1		16	200	6 (3)	**AK5PC12PH**
			32	1000	6 (3)	**AK5PC32LPH**
3-phase	2	18 mm	16	200	6	**AK5PC13**
			32	250	6	**AK5PC33**
				1000	6	**AK5PC33L**
3-phase + Neutral	2		16	200	6	**AK5PC14**
			32	250	6	**AK5PC34**
				1000	6	**AK5PC34L**
3-phase + common	2		16 10 (common)	200	6	**AK5PC131**
			32 10 (common)	250	6	**AK5PC331**

PB112411_R.eps



AK5 PC12

AK5 PC14

PB112412_R.eps



AK5 GF1

Accessories

Description	Maximum no. of connections	C.s.a. mm²	Sold in lots of	Unit reference
Cable guide	4	2.5 or 4	20	**AK5GF1**

(1) 4-pole: 3-phase + Neutral or 3-phase + Common.
(2) Total of 6 sockets supplied: 2 sockets (N + L1), 2 sockets (N + L2). 2 sockets (N + L3).
(3) Total of 6 sockets supplied: 2 sockets (L1 + L2), 2 sockets (L1 + L3). 2 sockets (L2 + L3).
(4) Cut and drill to suit use.

Presentation: pages B1/10 and B1/11
Characteristics: pages B1/20 and B1/21
Dimensions: pages B1/22 and B1/23
Mounting possibilities: page B1/14

Power distribution in control panels

Pre-assembled busbar system

PB112407_R.eps



AK5 PA231

PB112408_R.eps



AK5 PA232

PB500804_R.eps



AM1DL201

Component mounting plates incorporating tap-off

Single plate (height 105 mm)

Use	No. of 18 mm points used on the busbar system	Phase	Thermal currentA	Number of ⊔ rails for com-ponent support	Min. order qty	Reference
Single-phase + neutral	3 (54 mm width)	Ph1+N	25	1	1	**AK5PA211N1**
		Ph2+N	25	1	1	**AK5PA211N2**
		Ph3+N	25	1	1	**AK5PA211N3**
2-phase	3	Ph1+Ph2	25	1	1	**AK5PA211PH12**
		Ph1+Ph3	25	1	1	**AK5PA211PH13**
		Ph2+Ph3	25	1	1	**AK5PA211PH23**
3-phase	3	–	25	1	1	**AK5PA231**
3-phase + common	3	–	25	1	1	**AK5PA2311**
3-phase + neutral	3	–	25	1	1	**AK5PA241**

Double plate (height 190 mm)

Prefabricated 25 A connectors are supplied for connecting the 2 protection and control devices.

Single-phase + neutral	3	Ph1+N	25	2	1	**AK5PA212N1**
		Ph2+N	25	2	1	**AK5PA212N2**
		Ph3+N	25	2	1	**AK5PA212N3**
2-phase	3	Ph1+Ph2	25	2	1	**AK5PA212PH12**
		Ph1+Ph3	25	2	1	**AK5PA212PH13**
		Ph2+Ph3	25	2	1	**AK5PA212PH23**
3-phase	3	–	25	2	1	**AK5PA232**
	6 (108 mm width)	–	25	2	1	**AK5PA232S**
			50	1	1	**AK5PA532**
3-phase + neutral	3	–	25	2	1	**AK5PA242**
3-phase + common	3	–	25 (10 common)	2	1	**AK5PA2312**
	6	–	25 (10 common)	2	1	**AK5PA2312S**
			50 (10 common)	1	1	**AK5PA5312**
3-phase + neutral	6	–	50	1	1	**AK5PA542**

Omega rail, width 75 mm

This rail is designed to accommodate the busbar system when it is used with Linergy HK mounting plates incorporating tap-offs. It supportsthe busbar system. The plates simply clip onto the rail.

Material and surface treatment	Depth	Length	Min. order qty	Reference	Weight
	mm	mm			kg
2 mm sheet steel	15	2000 (4)	6	**AM1DL201**	3.000

Power distribution in control panels

Pre-assembled busbar system

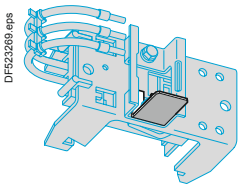

AK5 BT01

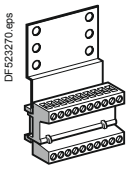

AK5 SB1

Extension plates

These plates bolt onto the equipment support plates, after having removed them from the rails, to be able to mount wider components.

Use		Number of tap-offs at 18 mm intervals	Reference
For mounting plates incorporating tap-off	Single	4	**AK5PE17**
	Double	4	**AK5PE27**

Side stop (AK5 JB mounted vertically)

Use	Set of	Reference
For extension plate (for AK5PA●●●)	50	**AK5BT01**

Control terminal blocks

Description	Thermal current A	Set of	Reference
10-pole terminal blocks, for screwing onto plate AK5 PA●●●			
	10	10	**AK5SB1**

Accessories

Description	Marking	Set of	Reference
Strips of clip-in markers 10 identical numbers, signs or capital letters per strip	0…9	25	**AB1R●** (1)
	+	25	**AB1R12**
	–	25	**AB1R13**
	A…Z	25	**AB1G●** (1)

*(1) Replace the ● in the selected reference with the number or letter required. Example: **AB1R1** or **AB1GA.***

Note:

■ *if the equipment is wider than the mounting plate, an extension plate can be used to increase the width of the support plate.*

■ *for upstream protection, see page B1/20.*

Presentation: pages B1/10 and B1/11
Characteristics: pages B1/20 and B1/21
Dimensions: pages B1/22 and B1/23
Mounting possibilities: page B1/14

Linergy BZ and HK

Technical Data for Designers

Contents

Linergy BZ:
> characteristics B1/18
> curves B1/19
Linergy HK:
> characteristics ..... B1/20 and B1/21
> dimensions ..... B1/22 and B1/23

TeSys starters and bare devices
Busbar support

Linergy BZ

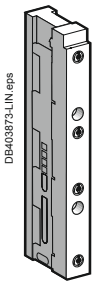

LA9ZX01495

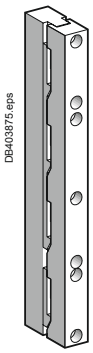

LA9ZX01485

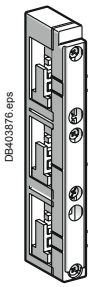

LA9ZX01508

General characteristics

		LA9ZX01495 and LA9ZX01485 (IEC 6.439-1)							
Bar dimensions compatibility	mm	12 x 5	15 x 5	20 x 5	25 x 5	30 x 5	12 x 10	20 x 10	30 x 10
Max. rated operating current	A	200	250	320	400	450	360	520	630
Min. peak permissible rated current	kA	30	30	30	30	45	35	35	53
Distance max. between 2 busbars supports	mm	570	570	570	570	570	570	570	570
Degree of protection	IP	20 (with cover LA9ZX01244 or LA9ZX01245)							
Thermal resistance	°C	125							
Rated current frequency	Hz	50/60							
Rated insulation voltage	V	690							
Rated operating voltage	V	690							
		LA9ZX01508 (UL) 508 A							
Bar dimensions compatibility	mm	12 x 5	20 x 5	30 x 5	12 x 10	20 x 10	30 x 10		
Rated operating current	A	150	362	500	300	564	630		
I_{eff} (RMS) surge current	kA	18	18	22 - 25	18	18	22 - 25		
SCCR (protected by Compact NSX circuit breaker) 250 A 480 V AC	kA	65	-	-	65	-	-		
SCCR (protected by Compact NSX circuit breaker) 250 A 600 V AC		25	-	-	25	-	-		
SCCR (protected by Compact NSX circuit breaker) 400 A 480 V AC		-	65	65	-	65	65		
SCCR (protected by Compact NSX circuit breaker) 400 A 600 V AC		-	35	35	-	35	35		
SCCR (protected by Compact NSX circuit breaker) 500 A 480 V AC		-	-	65	-	-	65		
SCCR (protected by Compact NSX circuit breaker) 600 A 600 V AC		-	-	35	-	-			
SCCR (protected by Compact NSX circuit breaker) 600 A 480 V AC		-	-	50	-	-	50		
SCCR (protected by Compact NSX circuit breaker) 600 A 600 V AC		-	-	25	-	-	25		
SCCR (protected by fuses Class J or T ...) 400 A 480 V AC		100	100	100	100	100	100		
SCCR (protected by fuses Class J or T ...) 500 A 480 V AC		-	-	100	-	-	100		
SCCR (protected by fuses Class J or T ...) 500 A 600 V AC		-	-	100	-	-	100		
Distance max. between 2 busbars supports (busbar protected)	mm	400	800	800	400	800	800		
Degree of protection	IP	20 (with cover LA9ZX01244 or LA9ZX01245)							
Thermal resistance	°C	125							
Rated current frequency	Hz	50/60							
Rated operating voltage	V	600							

TeSys starters and bare devices
Plates for mounting on busbars
Short-circuit withstand capability

Linergy BZ

Determining the spacing between busbar supports (LA9ZX01495 and LA9ZX01485), according to IEC 61439-1 (1)

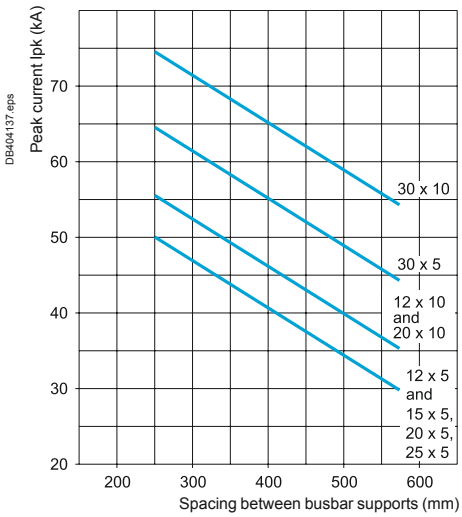

Short-circuit strength diagram according to UL845 (LA9ZX01508)

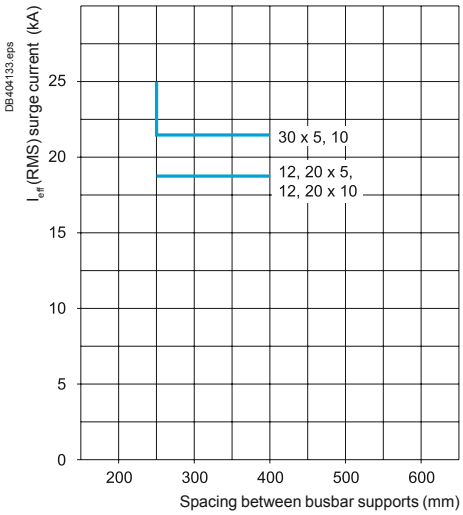

(1) Depending on the short-circuit current.

Load resistance of busbar assemblies in IEC applications

For an ambient temperature of 35 °C and a busbar temperature of 65 °C

Cross section	mm²	12 x 5	15 x 5	20 x 5	25 x 5	30 x 5	12 x 10	20 x 10	30 x 10
Permissible current	**A**	200	250	320	400	450	360	520	630

In the event of changes in climatic conditions, the following curve indicates the correction factor K_2 to be applied.

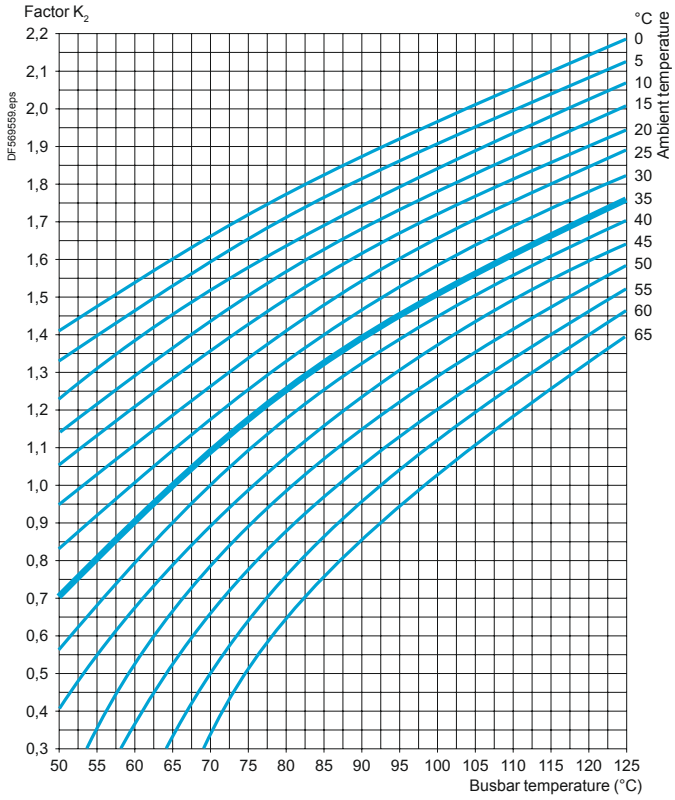

Example: In normal operating conditions, a tinned busbar of 30 x 10 can permanently withstand 630 A.

For a load of 800 A, the correction factor K_2 to be applied will be 1.3 ($\frac{800\ A}{630\ A}$). As a result, the temperature rise in the busbars will reach 82.5 °C.

Power distribution in control panels

Pre-assembled busbar system

Linergy HK

Busbar system characteristics

Conforming to standards			IEC 60439					
Product certifications			UL, CSA, DNV, LROS					
Degree of protection	Against access to live parts		IP XXB conforming to IEC 60529					
Flame resistance	Conforming to IEC 60695	**°C**	850 (incandescent wire)					
	Conforming to standard UL 94		V0					
Number of conductors	AK5 JB14●		4					
Supply current			~					
Rated operational frequency		**Hz**	50 or 60					
Rated operational current	Ambient temperature 35 °C	**A**	160					
	Coefficient K to be applied according to the ambient temperature	**°C**	35	40	45	50	55	60
		K	1	0.96	0.92	0.88	0.83	0.78
Rated insulation voltage	Conforming to IEC 60439-1	**V**	690					
	Conforming to UL and CSA	**V**	600					
Operational voltage			Off-load plugging-in and unplugging, with supply switched on					
	Conforming to IEC 60439-1	**V**	400					
	Conforming to UL, CSA	**V**	480					
			Plugging-in and unplugging, with supply switched off					
	Conforming to IEC 60439-1	**V**	690					
	Conforming to UL, CSA	**V**	600					
Maximum permissible peak current		**kA**	25					
Maximum let-through energy		**A²s**	1 x 10 ⁷					
Upstream short-circuit [1] and overload protection	Type of protection		Schneider Electric circuit-breaker			Fuses		
			NSX 160 N	NSX 160 H		aM	gF	
	Rating	**A**	160	160		160	160	
	Prospective short-circuit current	**kA**	36	70		100	100	
	Operational current	**A**	160	160		160	160	
Cabling			Maximum c.s.a.			Minimum c.s.a.		
	Flexible cable with cable end	**mm²**	70			2.5		
	Solid cable	**mm²**	70			2.5		
	Tightening torque	**Nm**	10					
Mounting position	Horizontal or vertical [2]		Fixing with screws provided					

(1) For conditions where conditional short-circuit current exceeds 25 kA.
(2) Using side stop **AK5 BT01** *on mounting plates* **AK5 PA**.

Presentation: pages B1/10 and B1/11
References: pages B1/14 and B1/15
Dimensions: pages B1/22 and B1/23
Mounting possibilities: page B1/14

Power distribution in control panels

Pre-assembled busbar system

Linergy HK

Tap-off characteristics

Type		AK5 PC12	AK5 PC12PH	AK5 PC13	AK5 PC14	AK5 PC131	AK5 PC32L	AK5 PC32LPH	AK5 PC33 PC33L	AK5 PC34 PC34L	AK5 PC331
Conforming to standards		IEC 60439									
Product certifications		UL, LROS, CSA, DNV									
Degree of protection		Against access to live parts: IP XXB conforming to IEC 529									
Polarity		Phase + Neutral	Phase + Phase	3-phase	3-phase + Neutral	3-phase + Common	Phase + Neutral	Phase + Phase	3-phase	3-phase + Neutral	3-phase + Common
Conductor c.s.a. (UL cables)	mm²	2 x 2.5	2 x 2.5	3 x 2.5	4 x 2.5	3 x 2.5 1 x 1.5	2 x 4	2 x 4	3 x 4	4 x 4	3 x 4 1 x 1.5
Conductor colours		Black Blue (Neutral)	Black	Black	Black Blue (Neutral)	Black White	Black Blue (Neutral)	Black	Black	Black Blue (Neutral)	Black White (Common)
Permissible current	A	16	16	16	16	16 10 (Common)	32	32	32	32	32 10 (Common)
Rated insulation voltage	V	690 conforming to IEC 60439-1									
Rated peak current	kA	6									
Maximum let-through energy	A²s	100 000					200 000				
Type of conductor insulation		PVC 105 °C									

Tap-off characteristics

Type		AK5 PA211N1 PA211N2 PA211N3 PA212N1 PA212N2 PA212N3	AK5 PA211PH12 PA211PH13 PA211PH23 PA212PH12 PA212PH13 PA212PH23	AK5 PA231 PA232 PA232S	AK5 PA241 PA242	AK5 PA2311 PA2312 PA2312S	AK5 PA532	AK5 PA542	AK5 PA5312
Conforming to standards		IEC 60439							
Product certifications		UL, LROS, CSA, DNV							
Degree of protection		Against access to live parts: IP XXB conforming to IEC 60529							
Polarity		Phase + Neutral	Phase + Phase	3-phase	3-phase + Neutral	3-phase + Common	3-phase	3-phase + Neutral	3-phase + Common
Conductor c.s.a. (UL cables)	mm²	2 x 4	2 x 4	3 x 4	4 x 4	3 x 4 1 x 1.5	2 x (3 x 4)	2 x (4 x 4)	2 x (3 x 4) 1 x 1.5
Permissible current	A	25	25	25	25	25 10 (Common)	50	50	50 10 (Common)
Rated insulation voltage	V	690 conforming to IEC 60439-1							
Rated peak current	kA	6							
Maximum let-through energy	A²s	200 000							
Type of conductor insulation		PVC 105 °C							

Characteristics of mounting rails AM1 DL201 and AM1 DL2017

Type		Omega (width 75 mm, depth 15 mm)
Material		2 mm sheet steel
Surface treatment		Galvanized

Presentation: pages B1/10 and B1/11
References: pages B1/14 and B1/15
Dimensions: pages B1/22 and B1/23
Mounting possibilities: page B1/14

Linergy HK

Busbars

AK5 JB●●●

820919.eps

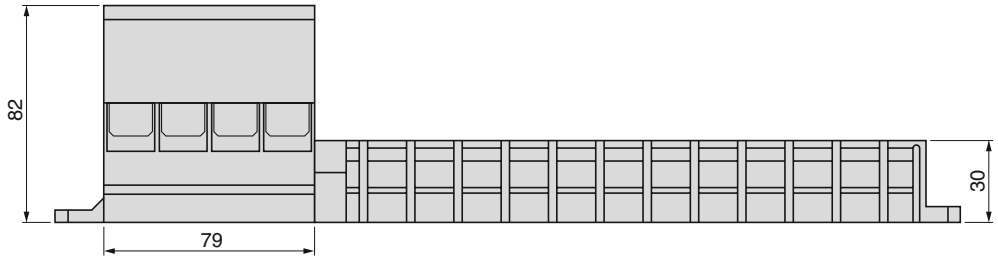

820920.eps

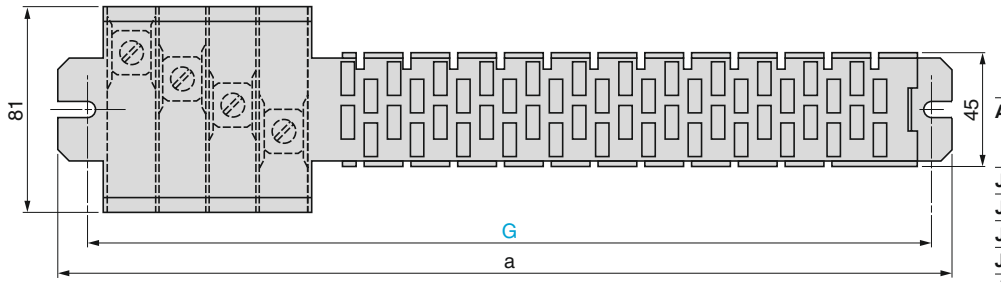

AK5	a	G	No. of 18 mm points
JB143	344	330	12
JB144	452	438	18
JB145	560	546	24
JB146	668	654	30
JB149	992	978	48
JB1410	1100	1086	54

Busbar feed units

AK5 JB●●●

820921.eps

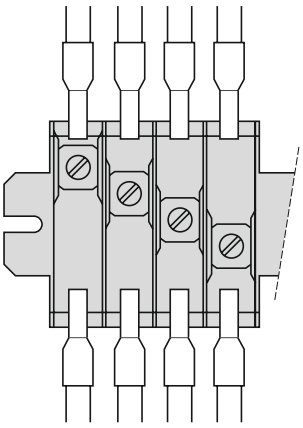

Installation of AK5 JB●●● busbar systems

Connection			C.s.a. in mm² min	C.s.a. in mm² max
Flexible cable with or without cable end			1 x 2.5 2 x 2.5	1 x 70 (1) 2 x 35
Flexible bar			–	2 x (9 x 4)
Flexible bar + flexible cable with or without cable end			9 x 4 + 1 x 2.5	9 x 4 + 1 x 35

(1) Maximum c.s.a. or connection of conductor without cable end.

Removable power sockets 16 and 32 A

AK5 PC12●. AK5 PC32L●

820922.eps

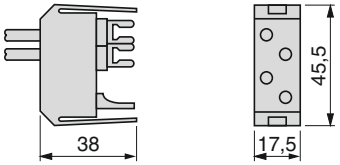

AK5 PC●3. AK5 PC33L
AK5 PC●4. AK5 PC34L
AK5 PC●31

820923.eps

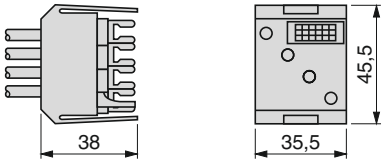

Mounting plates incorporating tap-offs, 25 A

AK5 PA2●1. AK5 PA2311. AK5 PA211●●●●

820925.eps

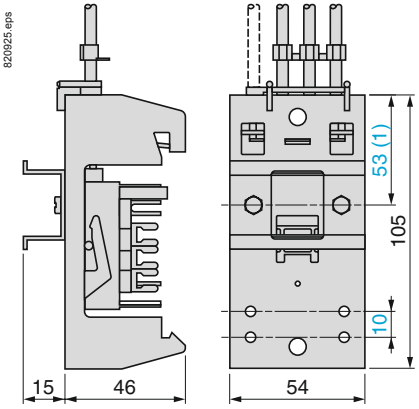

Single width extension plates

AK5 PE17

820924.eps

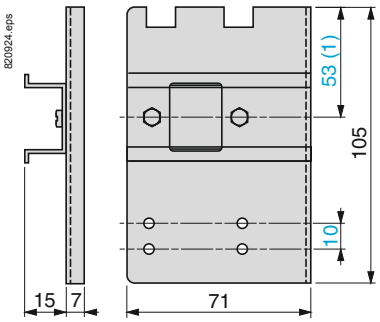

Note: *It is recommended that the power sockets or the removable plates are connected as close as possible to the busbar feed unit.*

(1) Can be fixed at 43 mm.

Presentation: pages B1/10 and B1/11
Characteristics: pages B1/20 and B1/21
References: pages B1/14 and B1/15
Mounting possibilities: page B1/14

Linergy HK

Component mounting plates incorporating tap-off
AK5 PA232. AK5 PA2312. AK5 PA242

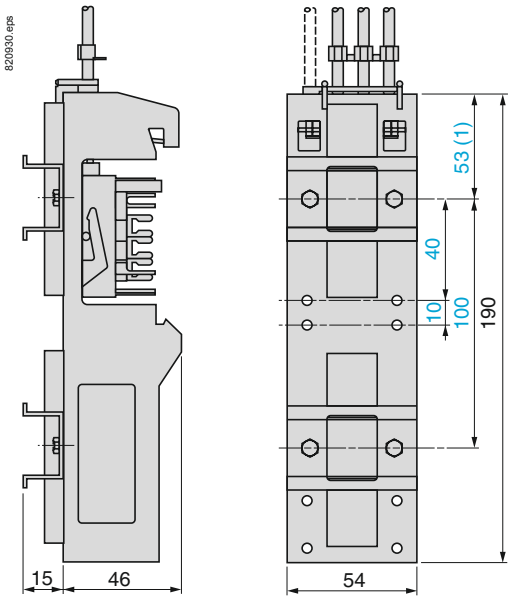

Double extension plate
AK5 PE27

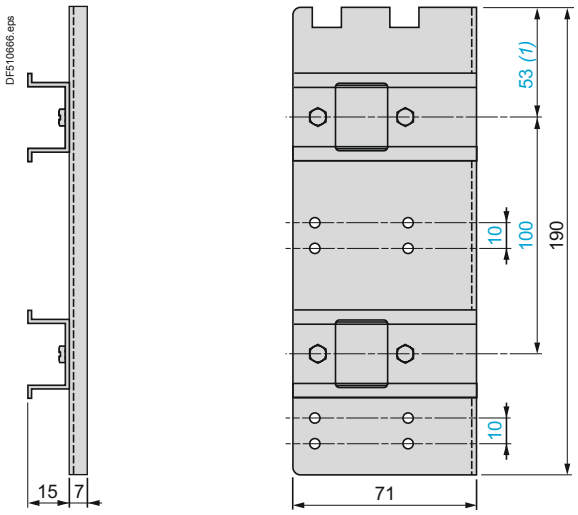

Component mounting plates incorporating tap-off
AK5 PA232S. AK5 PA2312S

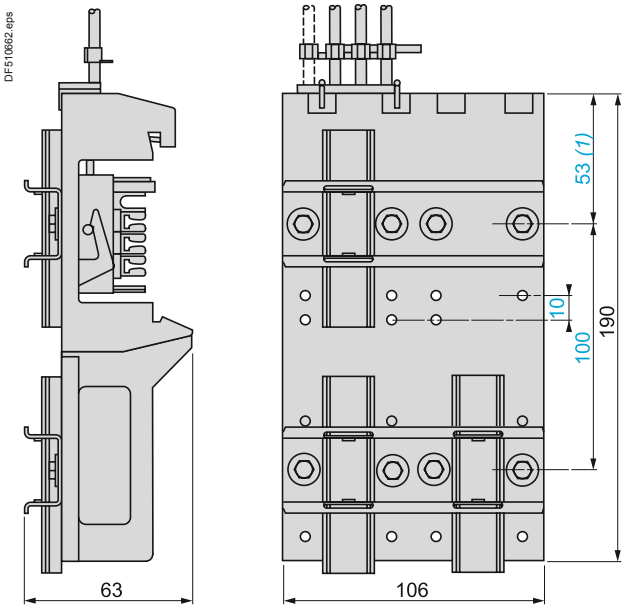

AK5 PA532. AK5 PA5312. AK5 PA542

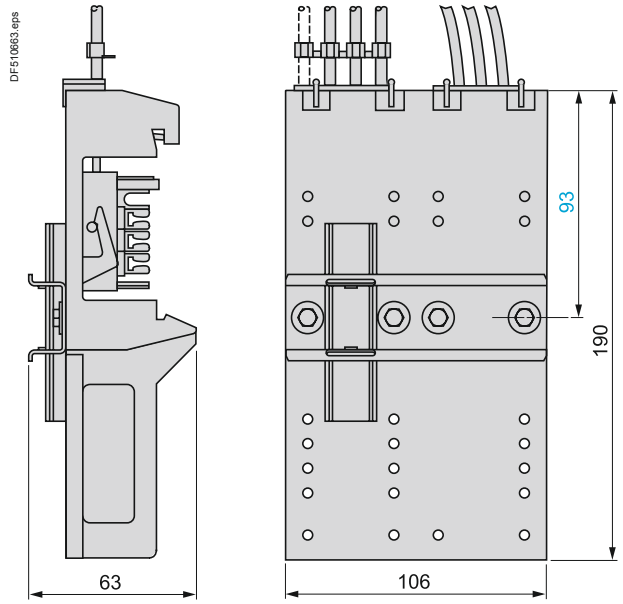

Side stop
AK5 BT01

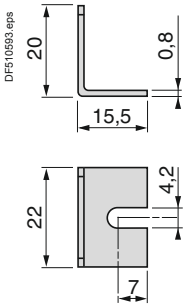

Control terminal block
AK5 SB1

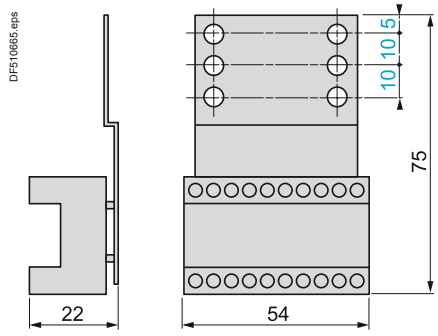

(1) Can be fixed at 43 mm.

Presentation: pages B1/10 and B1/11
Characteristics: pages B1/20 and B1/21
References: pages B1/14 and B1/15
Mounting possibilities: page B1/14

Motor starter wiring systems
TeSys

Motor starter power circuit wiring - Connection systems

Type of product		Pages
For circuit breaker + contactor, fuse carrier + contactor: with screw clamp connection TeSys GV	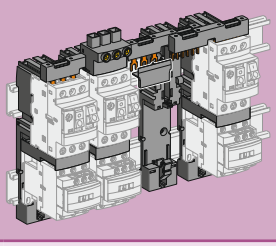	B2/2
For circuit breaker + contactor, fuse carrier + contactor: spring terminals connection TeSys LAD3	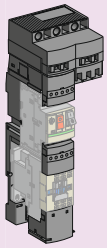	B2/4

Motor starter control circuit wiring - RJ45 connection

Selection guide Motor starters-to-PLC wiring architectures		B2/6
RJ45 connection modules for circuit breakers + contactors With screw clamp terminals TeSys SoLink	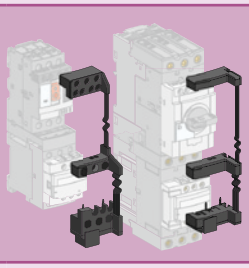	B2/8
RJ45 connection modules for circuit breakers + contactors With spring terminals TeSys LAD9	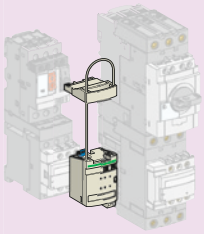	B2/10
RJ45 connection module for TeSys U motor starter Pluggable TeSys LUFC00	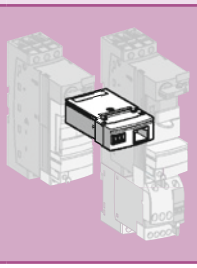	B2/12
Technical Data for Designers		B2/15

DB417847.eps

Group of fuse carriers directly mounted on DIN rail

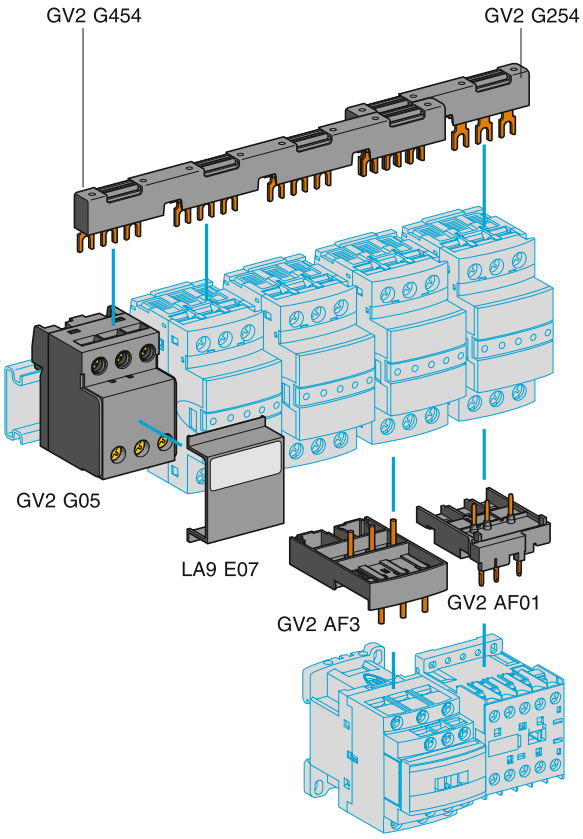

Group of fuse carriers + contactors mounted on adapter plates

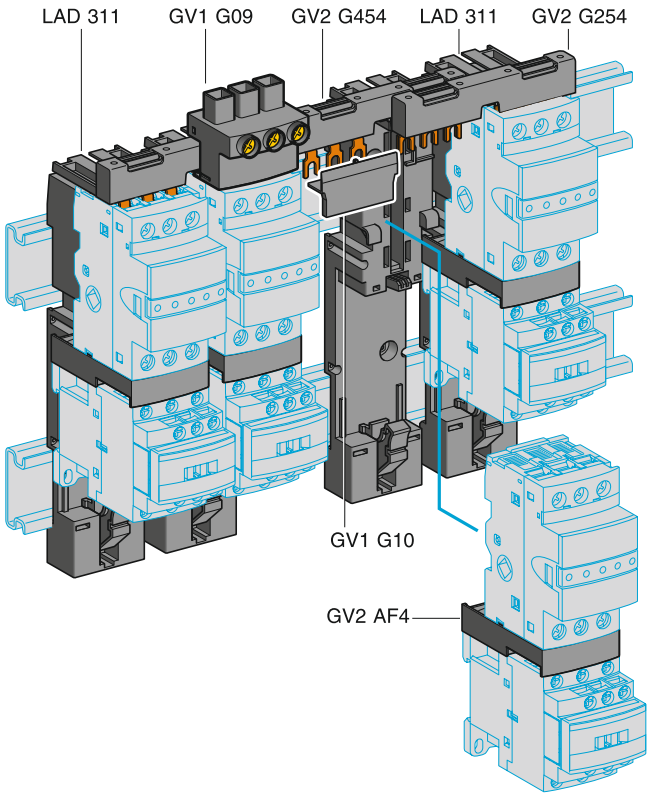

Group of circuit breakers directly mounted on DIN rail

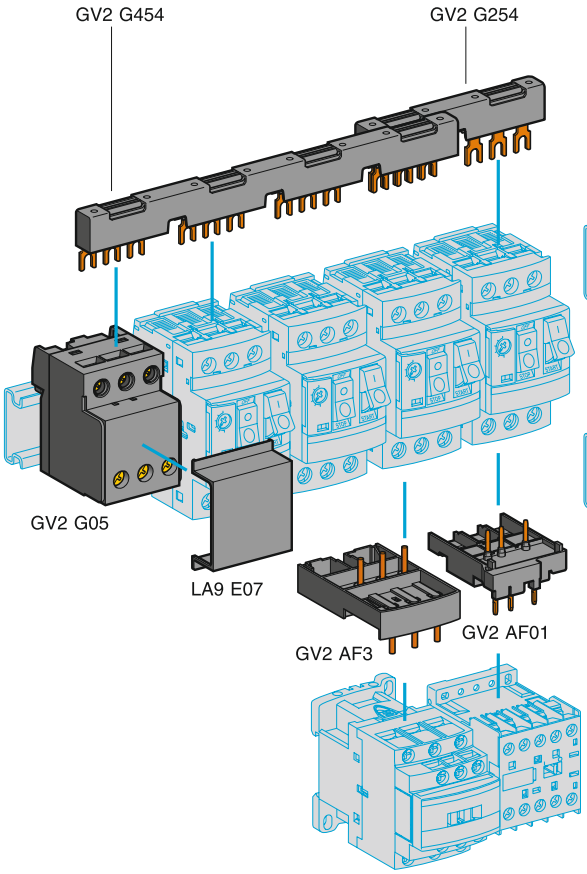

Group of circuit breakers + contactors mounted on adapter plates

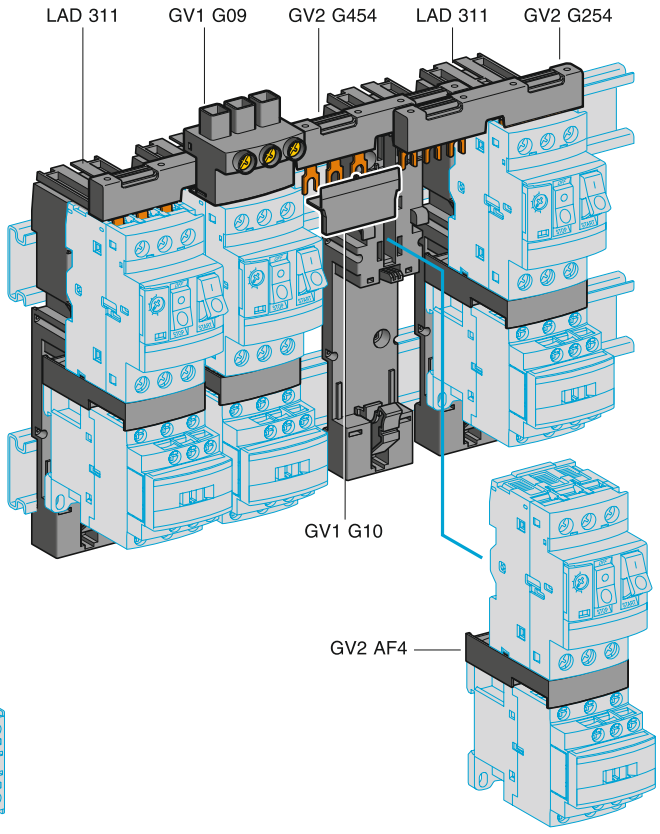

Motor starter power circuit wiring
Connection systems
With screw clamps connection

This system is convenient when time and space savings are required.
The motor starter can be composed of:
- LS1 D323 fuse carrier + LC1 D contactor
- GV2 circuit breaker + LC1 D contactor.

Upstream busbars and terminals

Description	Application	Pitch (mm)	Unit reference
Sets of 3-pole 63 A busbars	2 tap-offs	45	**GV2G245**
		54	**GV2G254**
		72	**GV2G272**
	3 tap-offs	45	**GV2G345**
		54	**GV2G354**
	4 tap-offs	45	**GV2G445**
		54	**GV2G454**
		72	**GV2G472**
	5 tap-offs	54	**GV2G554**

Description	Application	Sold in lots of	Unit reference
Terminal block for supply to one or more GV2 G busbar sets	Connection from the top	1	**GV1G09**
	Can be fitted with current limiter GV1 L3 (GV2 ME and GV2 P)	1	**GV2G05**
Cover for terminal block	For mounting in modular panels	10	**LA9E07**
Protective end cover	For unused busbar outlets	5	**GV1G10**

Assembling components

Description	Application	Sold in lots of	Unit reference
Combination blocks	Between GV2 and contactor LC1 K or LP1 K (1)	10	**GV2AF01**
	Between GV2 and contactor LC1 D09…D38 (1)	10	**GV2AF3**
	Between GV2 mounted on LAD 311 and contactor LC1 D09…D38	10	**GV2AF4**
Adapter plates	For mounting a GV2 ME and contactor LC1 D09…D38 with front faces aligned	1	**LAD311**
Height compensation plate	7,5 mm	10	**GV1F03**

(1) Ensures both the connection and a rigid support to the contactor. No extra fixing mean required.

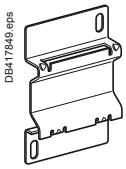

GV2 AF02

Accessories

Description	Application	Sold in lots of	Unit reference
Adapter plates	For mounting a GV2 ME or GV2 LE by screw fixing	10	**GV2AF02**
Motor starter adapter plate	For mounting a GV2 and a contactor LC1 D09…D25. Item delivered with a GV1G02 flexible connection	1	**GK2AF01**
Flexible 3-pole connection for connecting a GV2 to a contactor LC1-D09…D25	Centre distance between mounting rails: 100…120 mm	10	**GV1G02**
Set of connections upstream/downstream	For connecting GV2 ME to a printed circuit board	10	**GV2GA01**
"Large Spacing" adapter UL 508 type E	For GV2 P●●H7 (except 32 A)	1	**GV2GH7**
Clip-in marker holders (supplied with each circuit breaker)	For GV2 P, GV2 L, GV2 LE and GV2 RT (8 x 22 mm)	100	**LA9D92**

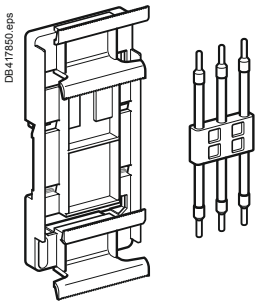

GK2 AF01

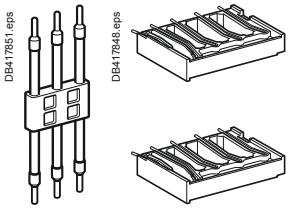

GV1 G02 *GV2 GA01*

Group of fuse carriers + contactors mounted on adapter plates

DB417852.eps

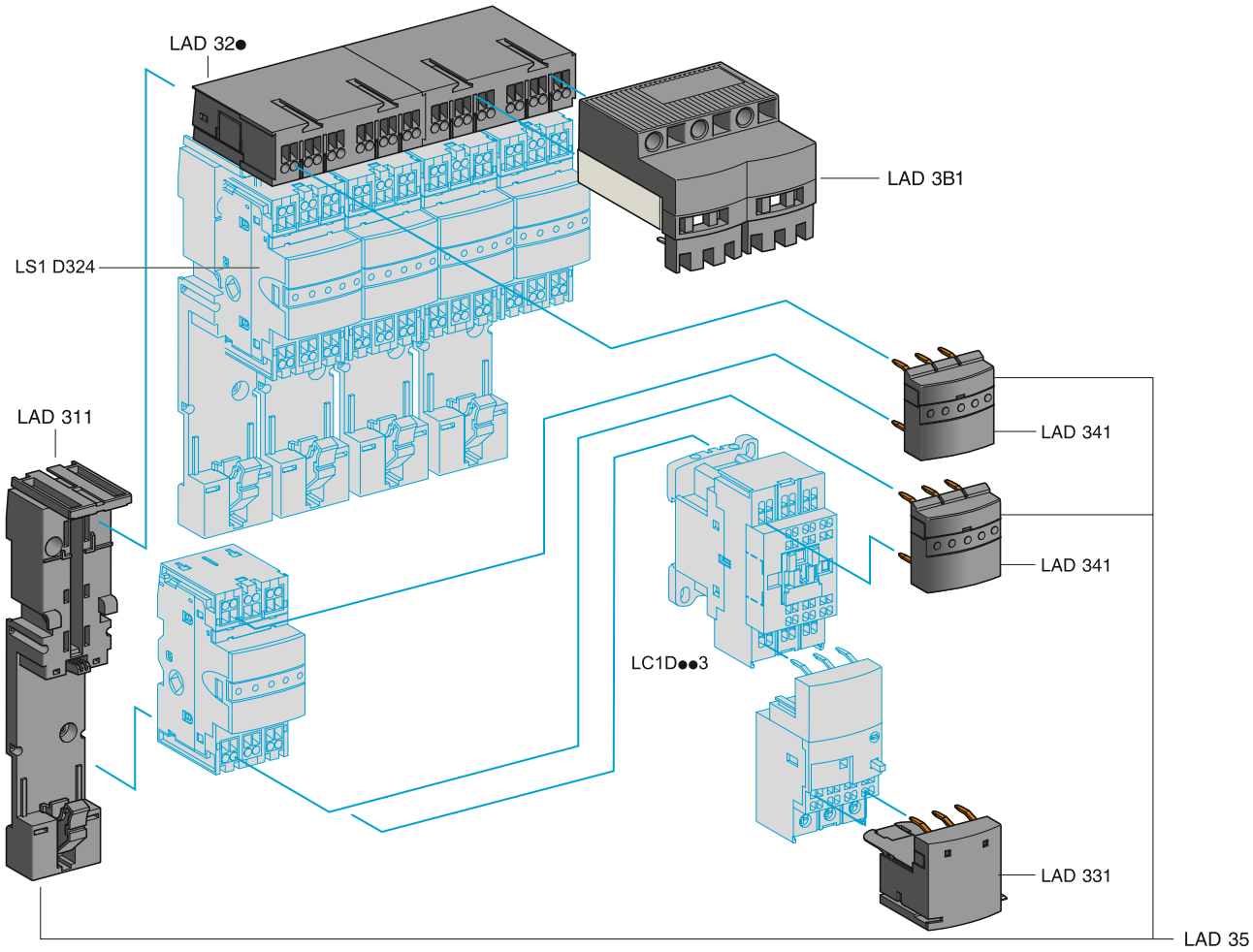

Power circuit pre-wiring components
Direct starter

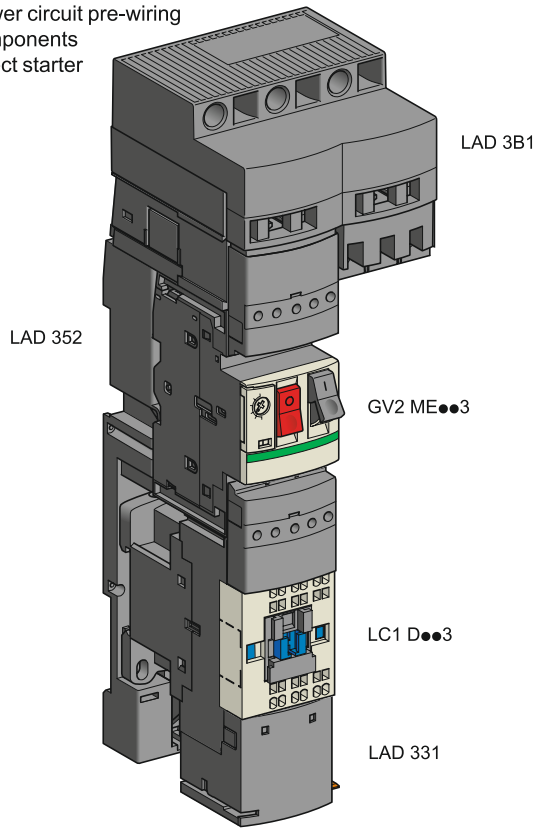

Power circuit pre-wiring components
Reversing starter

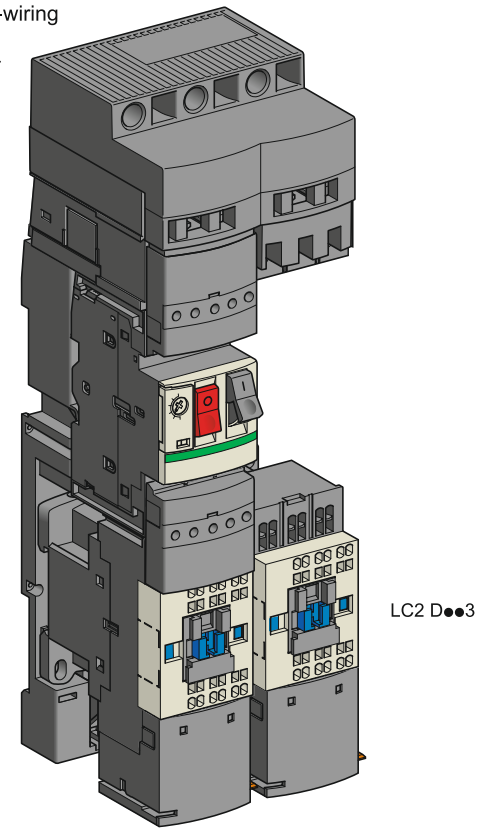

Motor starter power circuit wiring
Connection systems
With spring terminals connection

This system is convenient when time and space savings are required.
The motor starter can be composed of:
- LS1 D323 fuse carrier + LC1 D contactor.
- GV2 circuit breaker + LC1 D contactor

DF537900.eps

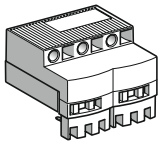

LAD 3B1

DF510365.eps

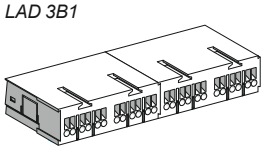

LAD 324

Upstream terminal and splitter blocks

Description	Maximum connection c.s.a.	Application	Sold in lots of	Reference
Upstream terminal block	16 mm² (1)	Power supply of 1 or 2 power splitter boxes	1	**LAD3B1**
Description	**Extension by**	**Number of starters**		**Reference**
Power splitter box, 60 A	LAD 32●	2	1	**LAD322**
		4	1	**LAD324**

DF563641.eps

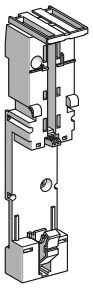

LAD 311

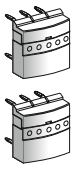

LAD 341

Assembling components

Description	Composition	Sold in lots of	Reference
Plate for mounting a GV2 ME circuit breaker and a contactor	For 1 starter	10	**LAD311**
Power connection module	For 1 starter	10	**LAD341**
Power connection kit for direct starter (2)	1 plate LAD 311 for GV2 ME and 2 power connection modules LAD 341		**LAD352**

DF563643.eps

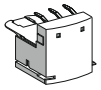

LAD 331

Downstream terminal and accessory

Description	Maximum connection c.s.a.	Application	Sold in lots of	Reference
Downstream terminal block	6 mm²	Connection of motor cables	10	**LAD331**
Cable end reducer	-	For connection of conductors from 1 to 1.5 mm²	20	**LAD99**

(1) Cables with one end pre-crimped are available to allow fast connection. References:
*1 set of 3 x 6 mm² cables (length 1 m: **LAD 3B061**, length 2 m: **LAD 3B062** and length 3 m: **LAD 3B063**),*
*1 set of 3 x 10 mm² cables (length 1 m: **LAD 3B101**, length 2 m: **LAD 3B102** and length 3 m: **LAD 3B103**),*
*1 set of 3 x 16 mm² cables (length 1 m: **LAD 3B161**, length 2 m: **LAD 3B162** and length 3 m: **LAD 3B163**).*
*(2) To build a reversing starter, order 2 kits **LAD 352**.*

Motor starters-to-PLC wiring architectures

Automated control of multiple motor starters

Product type	Connection interfaces for a group of motor starters		
IO system name	**Modicon TM3**	**Modicon Telefast**	**Modicon STB**
Architecture	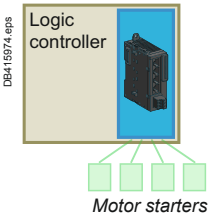	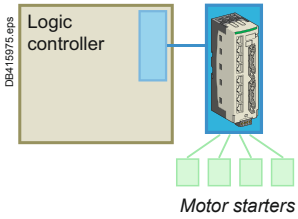	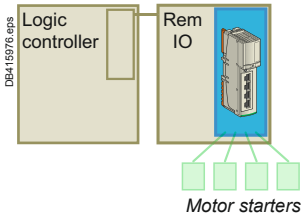
	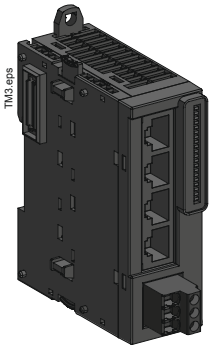	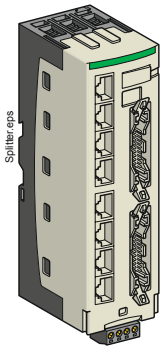	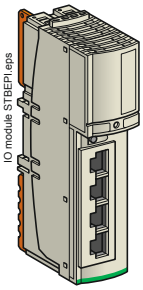
Application	Control of single or multiple motor-starters assemblies by mean of a logic controller. Machines or processes requiring easy, fast cabling and replacement of motor starters.		
Function	**IO module:** Ensures the direct connection of up to **4 motor starters** to logic controller (Modicon M221, M241, M251)	**Splitter box:** Ensures the connection of up to **8 motor starters** to a logic controller via Modicon Telefast multiwire cable	**IO module:** Ensures the connection of up to **4 motor starters** to a logic controller via an automation island (Modicon STB distributed IO architecture)
Upstream compatibility	With Modicon M221, M241, M251 logic controller, via logic controller internal bus	With any logic controller equipped with HE10 inputs/ outputs module	With Modicon STB automation island, via automation island internal bus
Upstream connectors	Backplane bus connector	HE10 connector	Backplane bus connector
Compatibility – **Motor circuit breaker - Type** / **Contactor - Type / Amp** / **Motor circuit breaker + Contactor - terminals**	All types of motor starters equiped with RJ45 connection system		
Motor control	Reversing / Non reversing		
Number of motor starters	**4**	**8**	**4**
Downstream connector type	RJ45		
Reference	**TM3XTYS4**	**LU9G02 / LU9G03**	**STBEPI2145K ***
Pages	Refer to Modicon M221/M241/ M251 catalogue	TeSys U - page B2/12 and A3/32	Refer to IP20 distributed IO Modicon STB catalogue

** STBEPI2145K: GV2 + contactor D09 to D32, TeSys U only.*

RJ45 connection components for motor starter

Common components for Modicon TM3, Modicon Telefast, Modicon STB systems

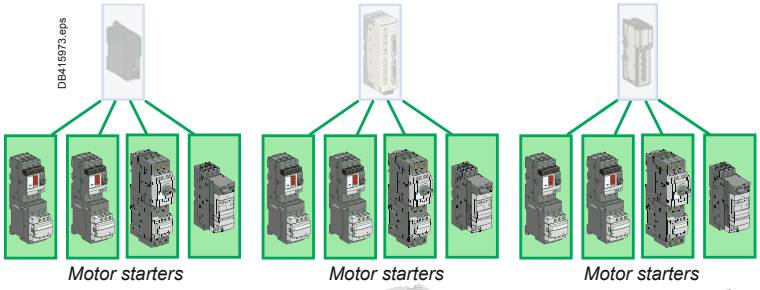

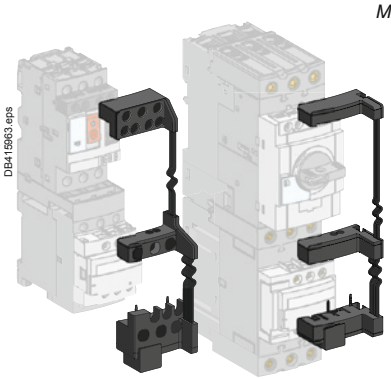

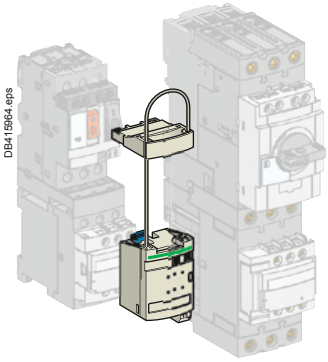

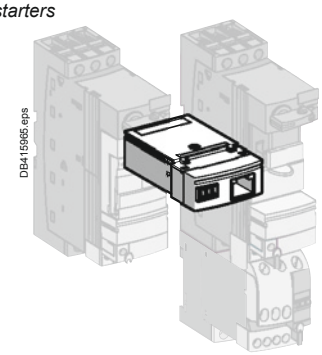

TeSys SoLink connection module: ensures the compatibility of circuit breaker + contactor assemblies with screw-clamp terminals to the RJ45 connection system				**Connection module:** ensures the compatibility of circuit breaker + contactor assemblies with spring terminals to the RJ45 connection system		**Connection module:** ensures the compatibility TeSys U motor starters to the RJ45 connection system
TM3XTYS4 / LU9G02 / LU9G03 / STBEPI2145K						
RJ45						
GV2ME / GV2P		GV3P		GV2ME / GV3P		TeSys U 12 to 32 A
TeSys D / 9 to 32 A		TeSys D / 40 to 65 A		TeSys D: 9 to 32 A (GV2ME), 40 to 65 A (GV3P)		
Screw-clamp				Spring		Screw-clamp
Non reversing	Reversing	Non reversing	Reversing	Non reversing	Reversing	Reversing or Non reversing
1						
Clamped pins				Plugin modules		Plugin module
LAD5C11	**LAD5C12**	**LAD5C31**	**LAD5C32**	**LAD9AP3●●**		**LUFC00**
B2/8				B2/10		B2/12

Motor starter control circuit wiring - RJ45 connection

Architecture for motor starters with screw clamp terminals

DB417813.eps

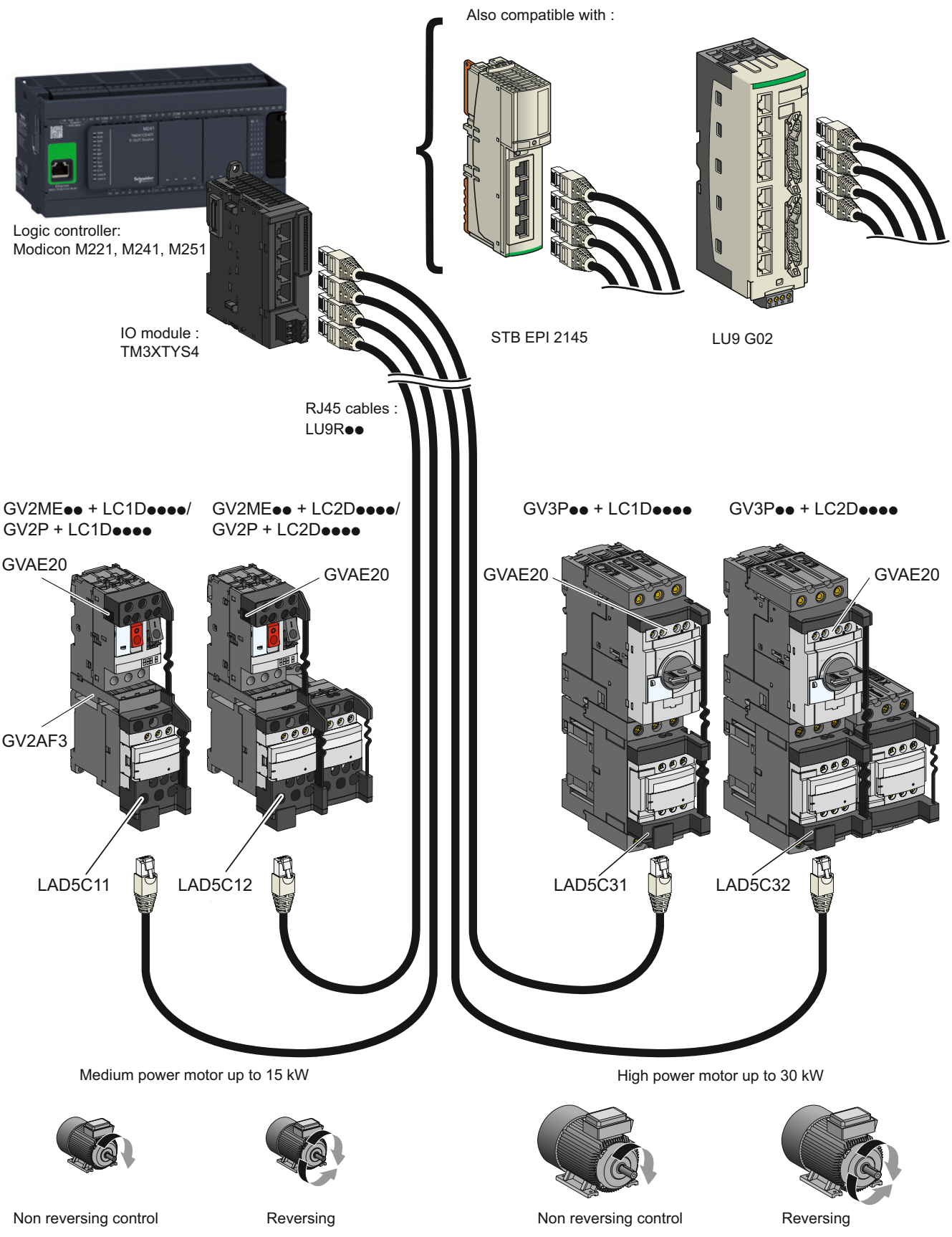

Motor starter control circuit wiring

RJ45 connection modules for circuit breakers + contactors with screw clamp terminals



LAD5C11

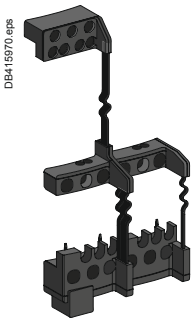

LAD5C12

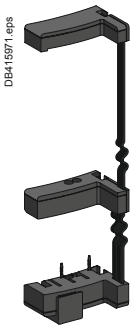

LAD5C31

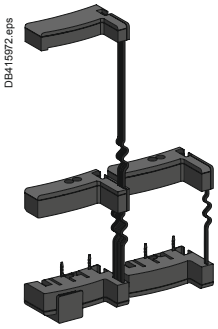

LAD5C32

Automated control of motor starters

Logic controller

Evolution makes motor control easier thanks to logic controller with specific IO modules or remote IO and programming with dedicated function blocks.
This possibility is acheivable with motor starters composed of conventional components such as motor-circuit breaker and contactor.

Complete solution

Based on Modicon M221/241/251 logic controller, it composed of:
- TM3XTYS4 logic controller I/O module for motor starters
- LU9R●● precabled RJ45 cables (different lengths)
- TeSys SoLink connection module for conventional motor components.

Control command functions

For each port of the TM3XTYS4 logic controller I/O module (4 ports):
- Monitoring of 2 inputs: Ready, Running
- Control of 2 outputs: ON/OFF, Foward/Reverse

Inputs are connected to the auxiliary contacts of the motor starter.
Outputs feed 24 V DC control coils.

TeSys SoLink connection module for circuit breaker + contactor assemblies with screw clamp terminals

Simplified and error free wiring

All the control and command terminals of the motor circuit breaker and contactor assembly are individually connected to the adaptor by mean of pre-shaped pins.
Once the pins inserted, the screw-clamp terminals must be normally tightened.
The upstream liaison is carried out with a simple RJ45 pre-connectorized cable.
The use of integrated NC contact of the contactor and 2 auxiliary contacts front blocks is preserved.

	Motor control	To be associated with circuit breaker + contactor ref.	Lots of	Reference
Connection module for control of motors up to 15 kW	Non reversing	GV2ME or GV2P LC1D09BL to LC1D32BL LC1D09BD to LC1D32BD	5	**LAD5C11**
	Reversing	GV2ME or GV2P LC2D09BL to LC2D32BL LC2D09BD to LC2D32BD	3	**LAD5C12**
Connection module for control of motors up to 30 kW	Non reversing	GV3P LC1D40ABD to LC1D65ABD	5	**LAD5C31**
	Reversing	GV3P LC2D40ABD to LC2D65ABD	3	**LAD5C32**

Design / Installation

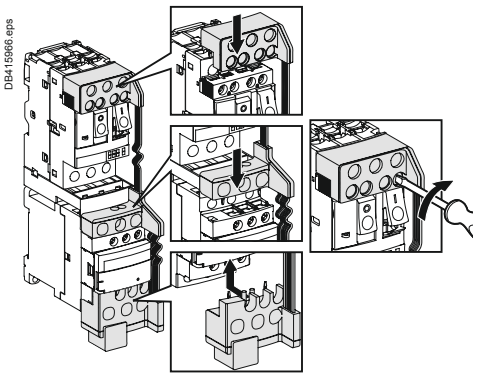

Mounting principle.

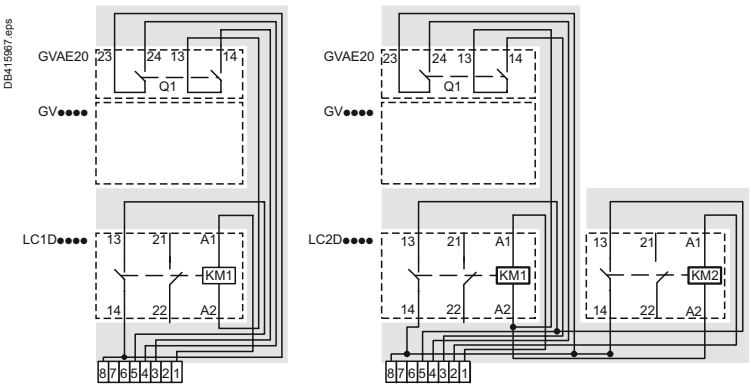

Notes:
GV2AF3 combination block is required for GV2 circuit breaker / contactor assembling.
GVAE20 auxiliary contact block must be assembled on GV2 and GV3 circuit breaker before LAD5C.
GVAX undervoltage trip unit, GV●APN●● extended rotary handle cannot be used with LAD5C●● connection modules.
Depth of the motor starter assemblies with contactors up to 18 A, is increased by 14 mm, height is increased by 21 mm and respectively 14 and 17 mm with contactors up to 32 A.

Motor starter control circuit wiring - RJ45 connection

Architecture for motor starters with spring terminals

DB417814.eps

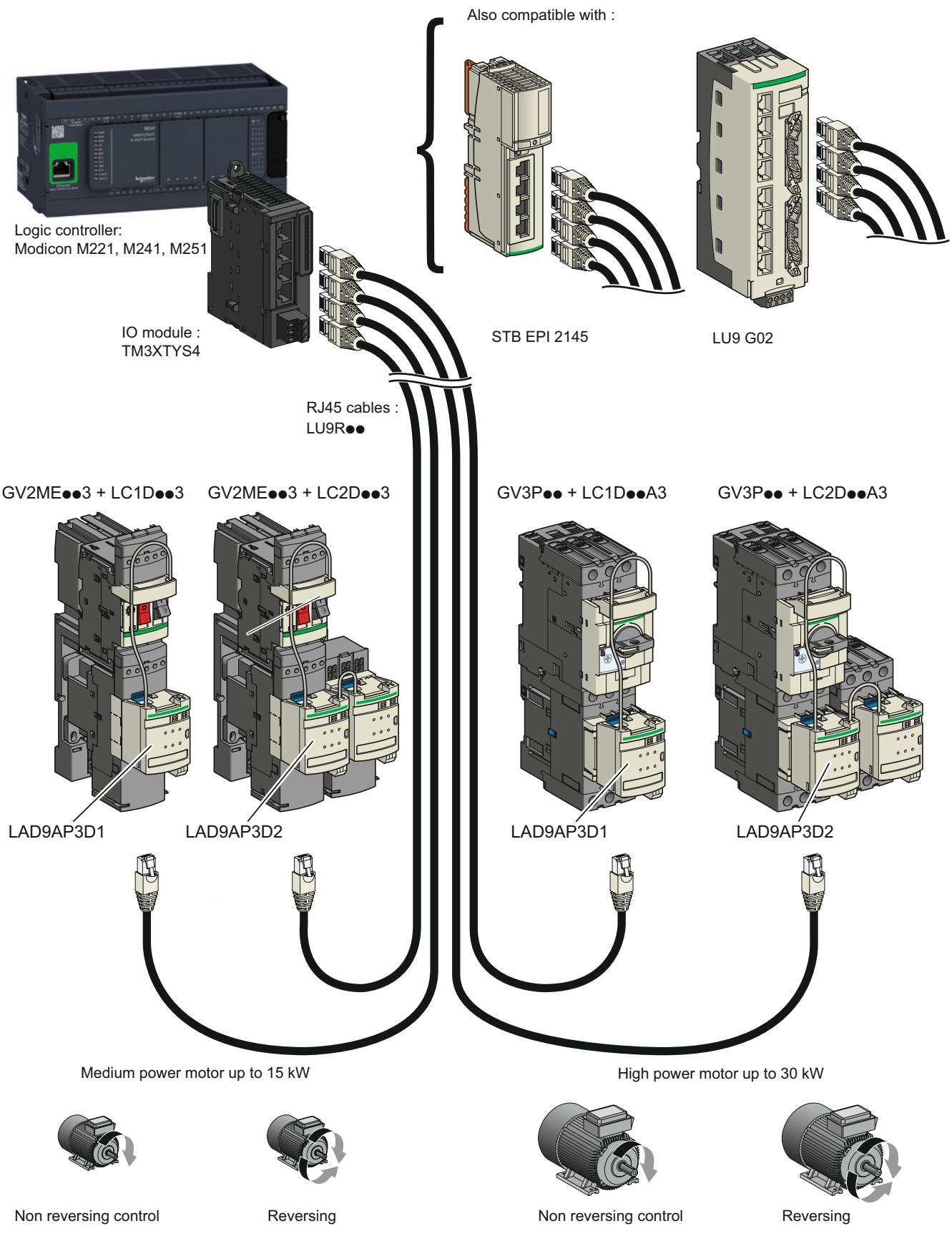

Motor starter control circuit wiring

RJ45 connection modules for circuit breakers + contactors with spring terminals

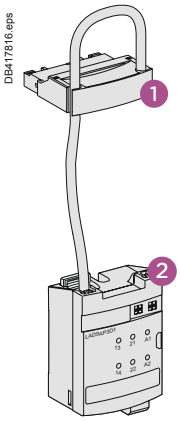

LAD9AP31

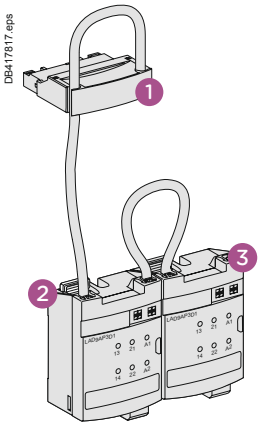

LAD9AP31

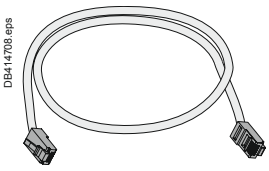

LU9R●●

❶ Plug connected to circuit breaker auxiliary contacts
❷ ❸ Plug connected to contactor, to RJ45 and Aux. supply
1-3: 24 V DC control signal to the internal relay. It's contact sends the external source voltage to the contactor coil (KM1 or KM2).
7-8: circuit breaker status
5-8: contactor status
The external link (red) can be replaced by an Emergency Stop pushbutton.

Note: *GV2 circuit breaker + LC1D contactor assemblies must include the LAD311 back plate + LAD341 power connector.*

LAD9AP3●● Connection module for circuit breaker + contactors

"Plug and play", for single or reverse motor starters

The connection module ❶ + ❷ provides a simple and safe solution for wiring control and monitoring terminals of a motor starter assembly. The connections to the terminals are grouped on a single (direct starter) or double (reverse starter) RJ45 connector. Thus, liaison to an IO module or splitter box is ensured by a straight preconnectorized RJ45 cable (LU9R●●).

Remote control of contactor coil, of any voltage

■ The LAD9AP3● "Electromechanical" version is adapted for contactors with coil of any voltage, (12 to 230 V AC, or 5 to 130 V DC) thanks to an internal relay ensuring the voltage interfacing. An external control supply is needed.
■ The LAD9AP3● "without relay" version is adapted for contactors with 24 V DC coil, the output voltage of the programmable logic controller IO or of the splitter box is directly applied to it.

Compatibility

■ TeSys GV2ME circuit breaker + TeSys D contactors ratings up to 18 A with spring type control terminals + LAD311 mounting plate + LAD 341 power connection module.
■ TeSys GV3P circuit breaker + LC1D●●● contactors up to 65 A with spring type control terminals.

❶ Circuit breaker plug:
plugs directly into the auxiliary contacts terminals of a TeSys GV2 ME or TeSys GV3 P motor circuit breaker, in the location provided for the front-mounting block.

❷ and ❸ Contactor block:
The contactor block ensures the connection to the coil and auxiliary contacts of the contactor. 2 contactor blocks are linked for the reverse starter assembly. Each one is fitted with a RJ45 connector.
The mechanical locking onto the top and bottom of the contactor ensures a perfect connection, whatever the operating conditions (vibrations, knocks, etc.)

Control command pre-wiring components

Description	TeSys D coil voltage	Type of coil control relay	Type of starter	Reference
Control connection modules	∿ 12...250 V or ⎓ 5...130 V	Electromechanical	Direct	**LAD9AP31**
			Reversing	**LAD9AP32**
	⎓ 24 V	Without relay	Direct	**LAD9AP3D1**
			Reversing	**LAD9AP3D2**

Connection cable

Between the control connection module and the splitter box LU9G02 or STBEPI2145

Connectors	Length (m)	Reference
2 x RJ45 connectors	0.3	**LU9R03**
	1	**LU9R10**
	3	**LU9R30**

Design / Installation

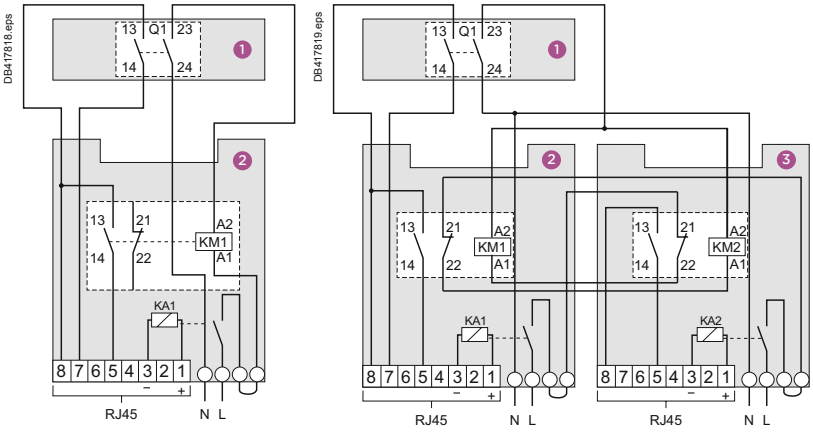

Motor starter control circuit wiring - RJ45 connection

Architecture for TeSys U motor starters

DB417815.eps

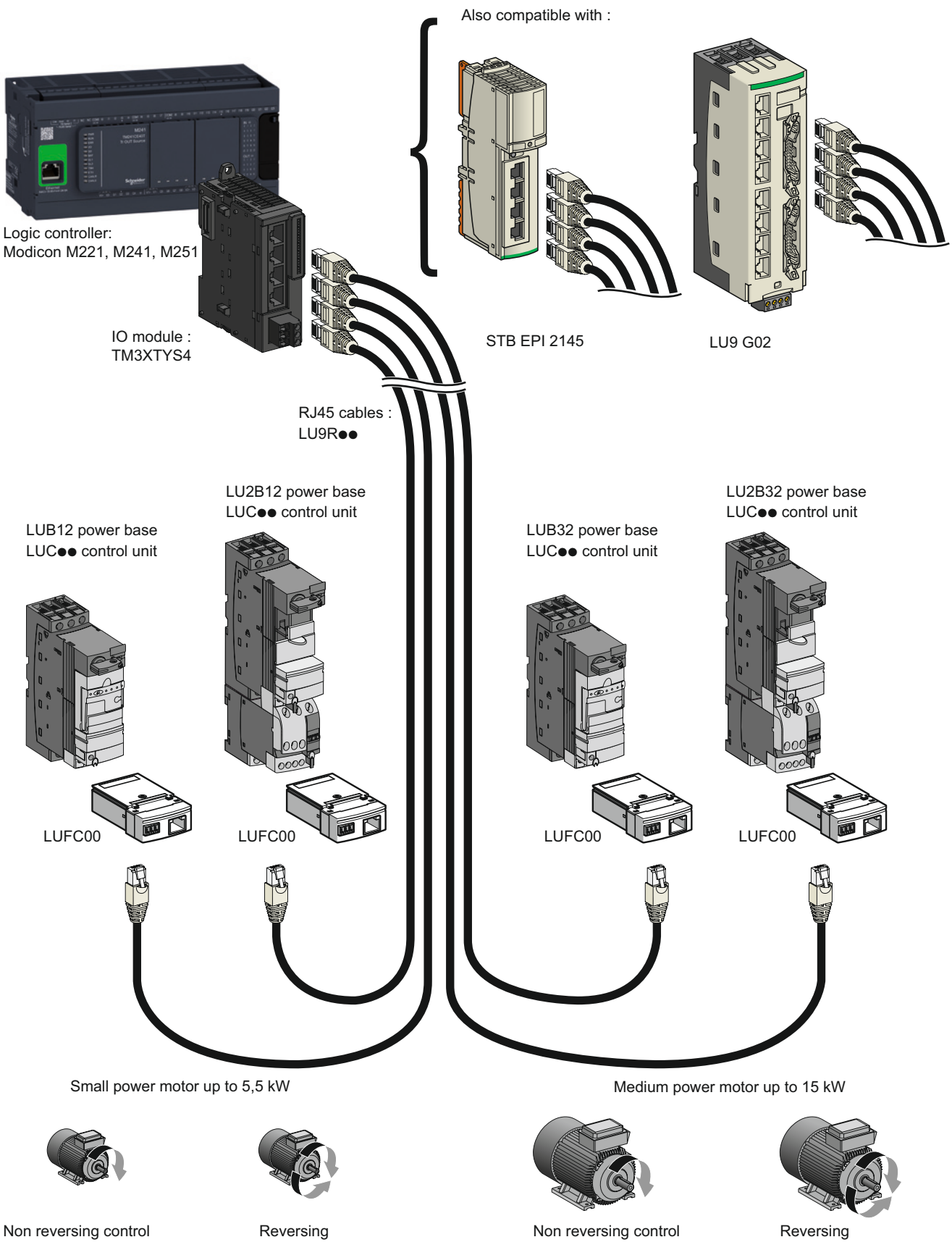

Motor starter control circuit wiring

RJ45 connection module for TeSys U motor starter

"Plug and play", for single or reversing motor starters

The LUFC00 parallel connection module provides a simple and efficient solution for control and monitoring of a TeSys U direct or reverse motor starter.

Compact, fast cabling

The connection to the TeSys U power base is simply achieved by insertion of the module into it. The status and control signals are carried by a simple pre-connectorized RJ45 cable (LU9R●●) between an IO module or splitter box and TeSys U.

Features

- On / OFF / Reverse control.
- Handle position, power contacts position monitoring.

Compatibility

- 12 or 32 A direct motor starters: LUB12 or LUB32 TeSys U power base + LU9N11C connector + LUC●● control unit (coil code B)
- 12 or 32 A reversing motor starters: LU2B12 or LU2B32 TeSys U power base + LU9MRC connector + LUC●● control unit (coil code B)

TeSys U RJ45 connection module	
Designation	**Commercial ref**
1 Parallel wiring module	**LUFC00**

TeSys U coil connector	
Designation	**Commercial ref**
2 Pre wired coil connector or LUB12 or LUB32 power base	**LU9BN11C**
3 Pre wired coil connector or LU2B12 or LU2B32 power base	**LU9MRC**

108620.eps



LUFC00

108622.eps



LU9MRC

PB108211.eps



LU9BN11C

Design / Installation

The LUFC00 parallel (RJ45) connection module acts as a connection interface for controlling the coil and the monitoring of the auxiliary contacts. As a necessary complement, a pre wired connector is needed for carrying the signal to the coil and collecting:

- the status of the protection device (OK / Alarm) with LU9BN11C,
- the electrical interlock contacts with LU9MRC.

As the "reversing" is higher than the "direct" power base, the LU9MRC link is longer than the LU9BN11C.

DF566964.eps

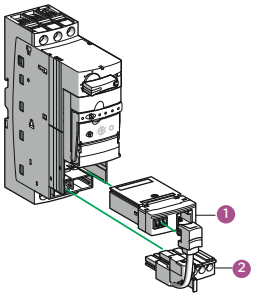

Direct motor starter (LUB power base)

DF510918.eps

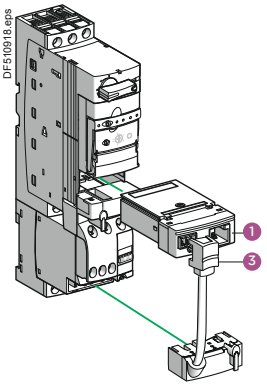

Reversing motor starter (LU2B power base)

TeSys

Technical Data for Designers

Contents

Connection systems for motor starters,
power circuits with screw clamp terminals:
> Dimensions (GV2 + LAD311 assembly) B2/16
> Dimensions (GV2G●●● busbars) B2/17

Connection systems for motor starters,
power and control circuits with spring terminals:
> Presentation B2/18
> Characteristics B2/19
> Dimensions B2/20

IO module, splitter box, for motor starters control circuits
> Dimensions B2/21

Connection systems for motor starters, power circuits
With screw clamp terminals

Dimensions

GV2 AF4 + LAD 311

Combination GV2 ME + TeSys d contactor

DF569009.eps

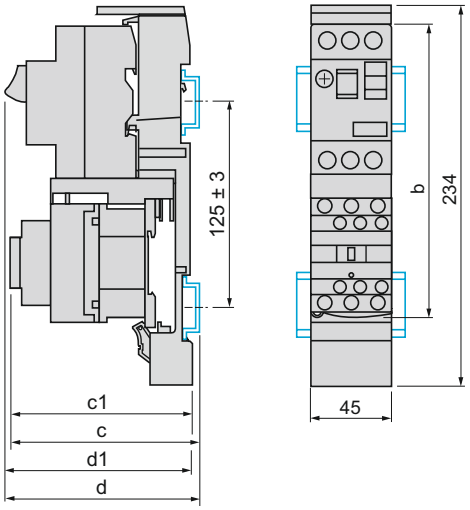

GV2 ME +	LC1 D09…D18	LC1 D25 and D32
b	176.4	186.8
c1	103.1	136.4
c	135.6	141.9
d1	107	107
d	112.5	112.5

Combination GV2 P + TeSys d contactor

DF569010.eps

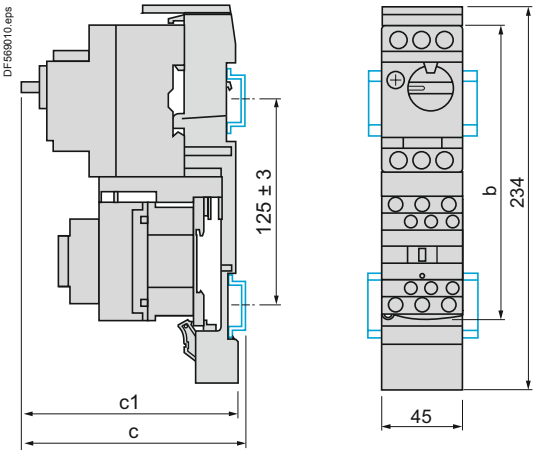

GV2 P +	LC1 D09…D18	LC1 D25 and D32
b	176.4	186.8
c1	136.5	142.4
c	141.6	147.9

7.5 mm height compensation plate GV1 F03

DF569006.eps

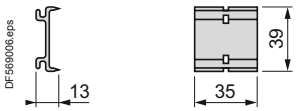

Connection systems for motor starters, power circuits
With screw clamp terminals

GV2 ME, GV2 P, GV2 L and GV2 LE

Sets of busbars GV2 G445, GV2 G454, GV2 G472, with terminal block GV2 G05

DF569037.eps

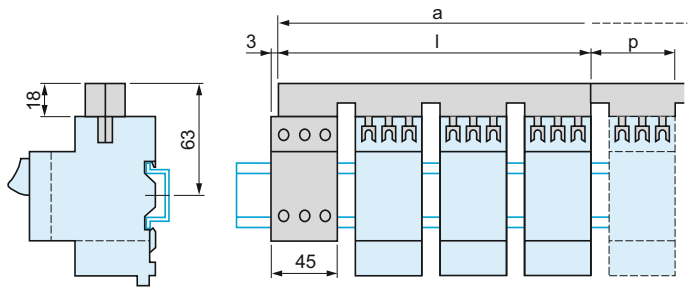

	l	p
GV2 G445 (4 x 45 mm)	179	45
GV2 G454 (4 x 54 mm)	206	54
GV2 G472 (4 x 72 mm)	260	72

	a			
Number of tap-offs	**5**	**6**	**7**	**8**
GV2 G445	224	269	314	359
GV2 G454	260	314	368	422
GV2 G472	332	404	476	548

Sets of busbars GV2 G●●● with terminal block GV1 G09

DF569028.eps

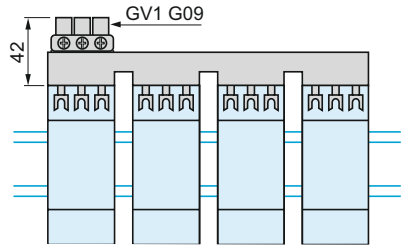

	l
GV2 G245 (2 x 45 mm)	89
GV2 G254 (2 x 54 mm)	98
GV2 G272 (2 x 72 mm)	116

Sets of busbars GV2 G245, GV2 G254, GV2 G272

DF569038.eps

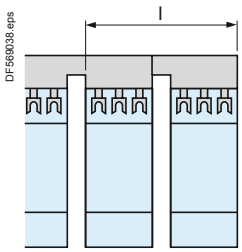

Sets of busbars GV2 G554

DF569039.eps

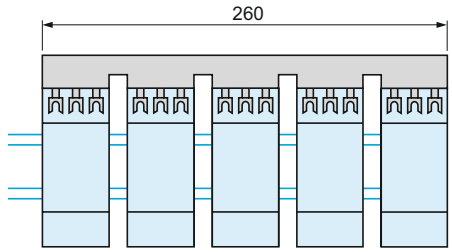

	l
GV2 G345 (3 x 45 mm)	134
GV2 G354 (3 x 54 mm)	152

Sets of busbars GV2 G345 and GV2 G354

DF569040.eps

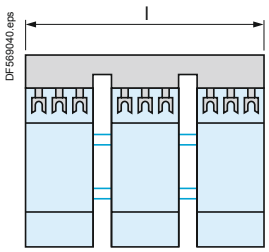

Connection systems for motor starters, power and control circuits

With spring terminals

DF510533.eps

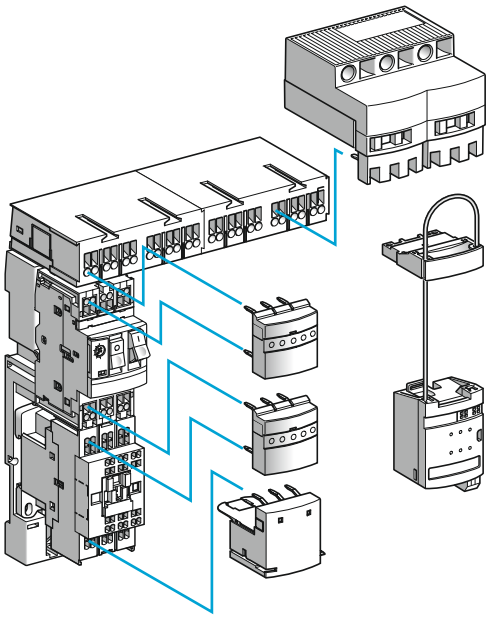

Motor starter with GV2 ME circuit breakers

It is a modular system which standardises and simplifies setting up of motor starters with its pre-wired control and power circuits.
Installation of a motor starter is therefore quick, simple, safe and flexible. In addition, this system:
- enables the motor starter to be customised at a later date,
- reduces maintenance time and
- optimises panel space by reducing the number of terminals and intermediate interfaces and the amount of ducting.

System for motor starters with spring terminals

Motor starters with TeSys GV2 ME circuit breakers

- From 0 to 18 A max.,
- TeSys GV2 ME circuit breakers combined with LC1 D contactors from 9 to 25 A (spring terminal version),
- pre-wired power and control connections.

Motor starters with TeSys GV3 P circuit breakers

- From 9 to 65 A max.,
- TeSys GV3 P circuit breakers combined with LC1 D contactors from 40 to 65 A (spring terminal version),
- pre-wired control connections only,
- For pre-wired power connections, use busbar sets from the TeSys D 40 to 65 A contactor range (see page B8/21).

DF503981.eps

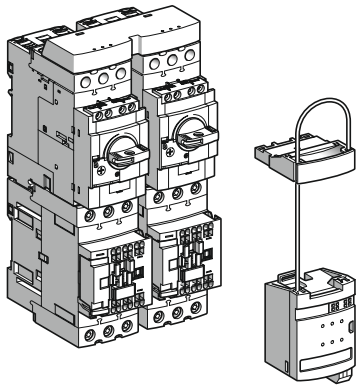

Motor starter with GV3 P circuit breakers

This range comprises pre-wiring components for:
- the power circuits,
- the control circuits.

Power circuit pre-wiring components
(motor starters with TeSys GV2 circuit breakers only)

- **a power circuit connection kit** comprising, for each starter, a plate for mounting the contactor and the circuit breaker and two power connection modules,
- **a power splitter box** for 2 or 4 starters,
- **an upstream terminal block** for a power supply up to 60 A (16 mm^2),
- **an outgoing terminal block** for connection of the motor power supply cables and the earth cables (6 mm^2).

Note: *with GV3 circuit breakers, no accessories are required for pre-wiring of the power circuit. The GV3 P●● outgoing terminal block can be removed.*
This circuit breaker is also sold with only one terminal block (reference: GV3 P●●1).

Control circuit pre-wiring components
(motor starters with TeSys GV2 and GV3 circuit breakers)

- **a control circuit connection module** which plugs directly into the contactor and the circuit breaker on each starter. This module incorporates status and control data for this motor starter.
- **a parallel wiring module** which concentrates the data of each motor starter:
  - **HE 10** connector, for centralised applications. Data is transmitted to the PLC via the Advantys Telefast pre-wired system.
  - **STB**, designed for decentralised automation architectures. This module is suitable for use in an Advantys STB configuration for connection to the PLC via a field bus.

Characteristics: page B2/19
References: page B2/11
Dimensions: pages B2/20 and B2/21

Connection systems for motor starters, power and control circuits

With spring terminals

General environment

Type of control connection module				LAD 9AP3●●
Standard				IEC 60439-1
Certifications				UL, CSA
Degree of protection		Conforming to IEC 60529		IP 40 (mounted assembly)
Resistance to incandescent wire		Conforming to IEC 60695-2-1	°C	960
Shock resistance		Conforming to IEC 60068-2-27		11 ms and 15 gn (half sine wave)
Vibration resistance		Conforming to IEC 60068-2-6 and BV/LR	gn	2…100 Hz: 4 and 3…100 Hz: 0.7
Resistance to electrostatic discharge		Conforming to IEC 61000-4-2		Level 3
Resistance to radiated fields		Conforming to IEC 61000-4-3	V/m	10 (26…1000 MHz)
Immunity to fast transient currents		Conforming to IEC 61000-4-4		Level 3
Surge withstand		Conforming to IEC 61000-4-5	kV	2 in common mode, 0.6 in differential mode Wave form: 1.2/50 µs - 8/20 µs
Immunity to radioelectric fields		Conforming to IEC 61000-4-6	V	10 (0.15...80 MHz)
Ambient air temperature		Operation in floor-standing enclosure	°C	-5…+60
		Operation in wall-mounted enclosure	°C	-5…+40
		Storage	°C	-40…+70
Space required around mounted assembly		For inserting cables and heat dissipation	mm	> 30
Degree of pollution				3
Assembly fixing (with TeSys GV2 circuit breakers only)				On 2 x 35 mm rails or with 2 x Ø5.5 mm screws on plate for GV2 ME
Suitable wire c.s.a.	Voltage supply for power	Number of wires		3
		Flexible cable with cable end	mm²	16
		Flexible cable without cable end	mm²	25
		Solid cable	mm²	25
	Voltage supply for contactor coil control	Number of wires		2
		Flexible cable with cable end (max)	mm²	1.5
		Flexible cable without cable end (max)	mm²	2.5
		Solid cable (max)	mm²	2.5

3-phase power circuit characteristics

Maximum current	Per power supply	Conforming to IEC 60439-1	A	60 (single power supply to one or more sub-bases or splitter boxes)
	Per sub-base	Conforming to IEC 60439-1	A	60
GV2 operating limit				80 % of Imax at 60 °C ambient temperature (see table on opposite page)
Maximum current per starter			A	18 (with an empty slot between two starters)
Insulation voltage			V	750
Operational voltage			V	690
U imp			kV	6
Rated operational frequency			Hz	50-60
Rated short-circuit current conditional Isc at 415 V		Conforming to IEC 60439-1	kA	50
Permissible short-time rating Icw		Conforming to IEC 60439-1	kA	9.1 (for 70 ms)

Control circuit characteristics

Contactor coil control voltage	V	∼ 12…250 (with interface relay)
	V	⎓ 5…24 (without interface relay)
	V	⎓ 5…130 (with interface relay)

Presentation: page B2/18 References: page B2/11 Dimensions: pages B2/20 and B2/21

Connection systems for motor starters, power and control circuits

With spring terminals

Dimensions

Mounted assembly, with TeSys GV2 ME circuit breakers and TeSys D contactors

DF524720.eps

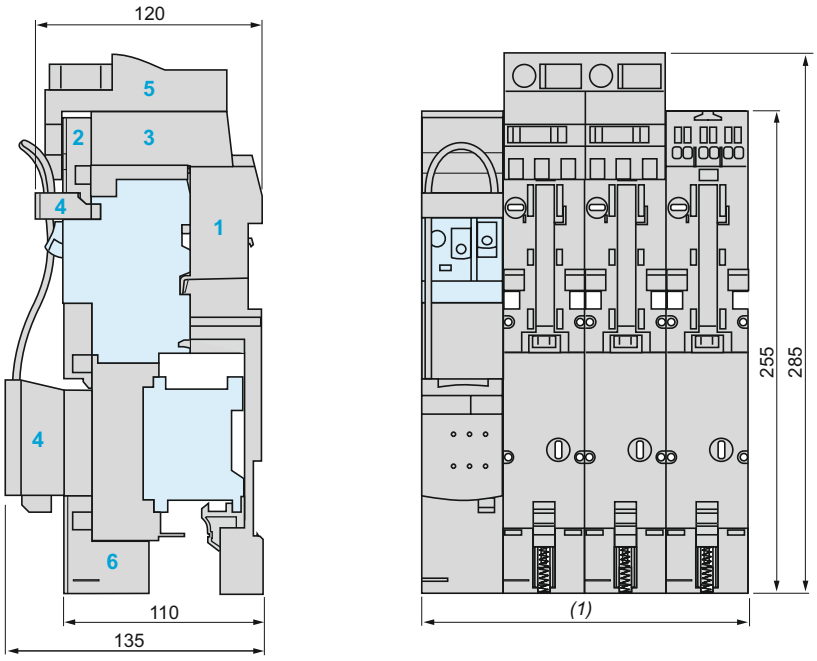

1 Circuit breaker and contactor support plate
2 Power connection module
3 Power splitter box
4 Control splitter box
5 Upstream terminal block
6 Outgoing terminal block

(1) 2 starters: 90 mm, 4 starters: 180 mm, 8 starters: 360 mm.

Mounted assembly with TeSys GV3 P circuit breakers and TeSys D contactors (LC1 D40A3… LC1 D65A3)

Vertical mounting

DF524718.eps

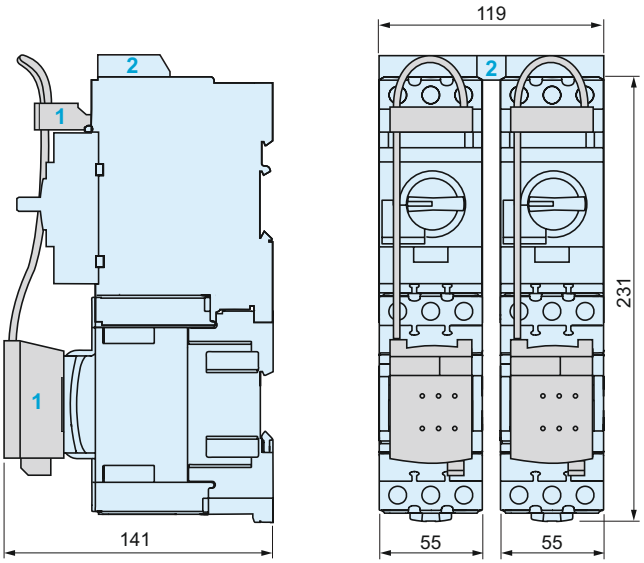

Side by side mounting

DF510724.eps

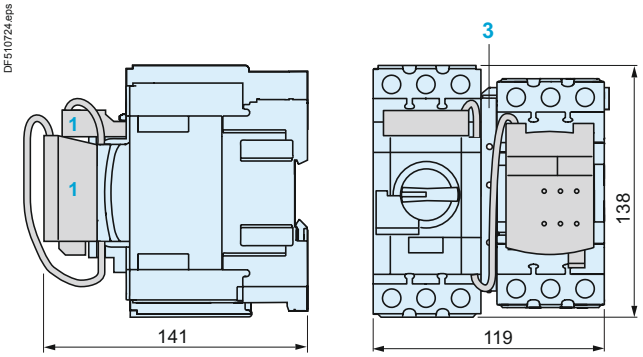

1 Control splitter box
2 Set of GV3 G264 busbars
3 Set of S-shape busbars GV3 S

Presentation: page B2/18
Characteristics: page B2/19
References: page B2/11

IO module, splitter box, for motor starters control circuits

Dimensions

Parallel RJ45 wiring modules

Splitter box LU9 G02

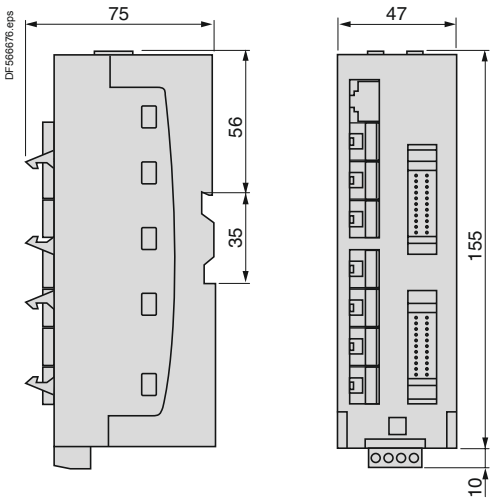

Parallel wiring module Advantys STB EPI 2145

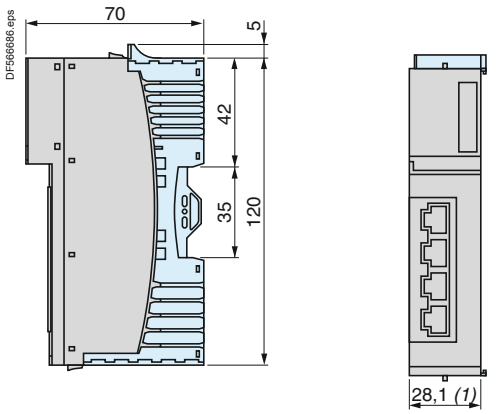

*(1) Dimension to be multiplied by the number of **STB EPI 2145** modules present in the configuration.*

Wiring systems

Switch-disconnectors
TeSys Vario

Door mounting isolation switch - mini Vario - Vario

Type of product	Range		Pages
Switch disconnectors mini-Vario	Up to **12** or **20** A		B3/2
Switch disconnectors, **high performance applications** Vario	From **12** to **175** A		B3/6
Accessories mini-Vario and Vario			B3/8

Technical Data for Designers B3/17

TeSys protection components

Mini-VARIO switch-disconnectors for standard applications

Complete units

- 3-pole rotary switch-disconnectors, 12 to 20 A
- Marking on operator ○ |.
- Padlockable operating handle (padlocks not supplied).
- Degree of protection IP 65.

PF511156.tif



VCDN 20

PF511157.tif

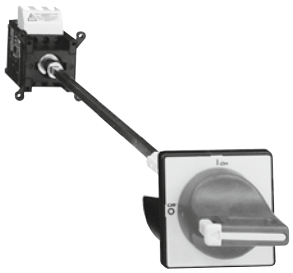

VCCDN 20

PF511158.tif



VBDN 20

Main and Emergency stop switch-disconnectors for door mounting

Operator			Ith	Reference
Handle	Front plate	Fixing		
	mm	mm	A	
Red, padlockable with up to 3 padlocks (Ø4 to Ø8)	Yellow 60 x 60	Ø22.5	12	**VCDN12**
			20	**VCDN20**

Main and Emergency stop switch-disconnectors for mounting at back of an enclosure (1)

Operator			Ith	Reference
Handle	Front plate	Fixing		
	mm	mm	A	
Red, padlockable with up to 3 padlocks (Ø4 to Ø8)	Yellow 60 x 60	Ø22.5	12	**VCCDN12**
			20	**VCCDN20**

Main switch-disconnectors for door mounting

Operator			Ith	Reference
Handle	Front plate	Fixing		
	mm	mm	A	
Black, padlockable with up to 3 padlocks (Ø4 to Ø8)	Black 60 x 60	Ø22.5	12	**VBDN12**
			20	**VBDN20**

(1) Switches supplied with a shaft extension **VZN 17** *and a door interlock plate* **KZ 32** *(see page B3/5).*

Characteristics: pages B3/18 to B3/21

Dimensions: pages B3/22 and B3/23

Schemes: page B3/23

TeSys protection components
Mini-VARIO switch-disconnectors for standard applications
Switch bodies, add-on modules

Mini-Vario

812801.tif

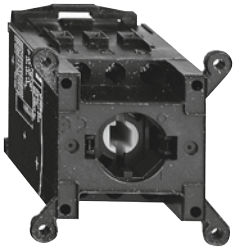

VN 20

580586.tif



VZN 11

580587.tif



VZN 14

580588.tif

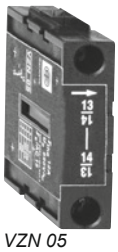

VZN 05

812805.tif



VZN 26

812806.tif

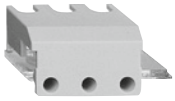

VZN 08

Switch bodies

Description	Rating A	Reference
3-pole switch-disconnectors	12	**VN12**
	20	**VN20**

Add-on modules

Description	Rating A	Reference
Main pole modules	12	**VZN12**
	20	**VZN20**
Neutral pole module with early make and late break contacts	12 and 20	**VZN11**
Earthing module	12 and 20	**VZN14**
Auxiliary contact block modules	1 N/O late make contact	**VZN05**
	1 N/C early break contact	**VZN06**
Input terminal protection shrouds	For add-on pole modules or auxiliary contact block modules (single-pole shroud)	**VZN26**
	For switch bodies (3-pole shroud)	**VZN08**

Maximum number of add-on modules that can be fitted on a switch body

VZN 12 or VZN 20 +	**VN 12**	+ VZN 12 or VZN 20
or	**or**	or
VZN 05 or VZN 06	**VN 20**	VZN 11 + VZN 14
		or
		VZN 05 or VZN 06

Characteristics: pages B3/18 to B3/21
Dimensions: pages B3/22 and B3/23
Schemes: page B3/23

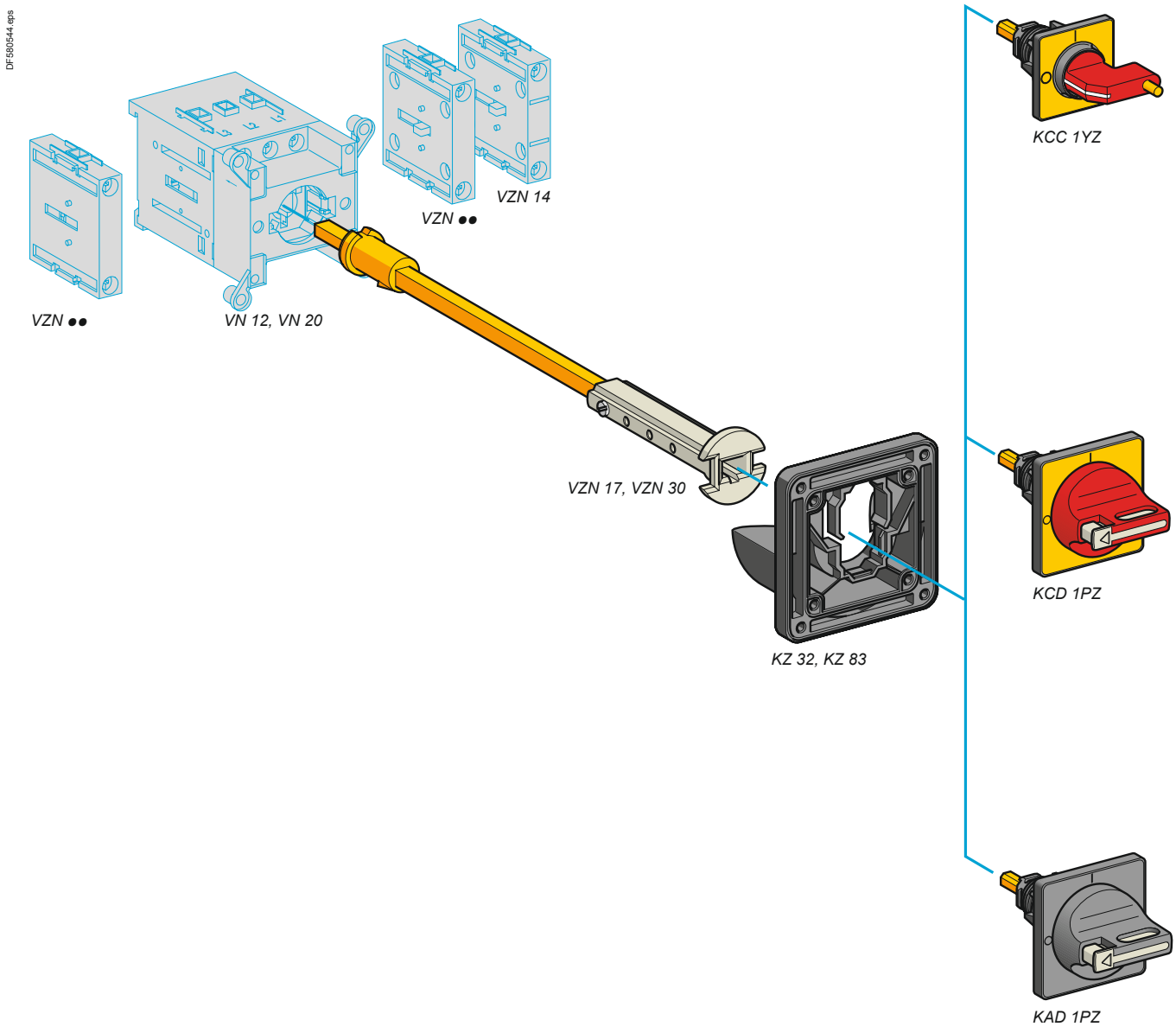
DF580544.eps
VZN 14
VZN ●●
VZN ●●
VN 12, VN 20
VZN 17, VZN 30
KZ 32, KZ 83
KCC 1YZ
KCD 1PZ
KAD 1PZ

TeSys protection components
Mini-VARIO switch-disconnectors for standard applications
Operators and accessories

- Degree of protection IP 65.
- Marking on operator .
- Padlockable operating handle (padlocks not supplied).
- Operator fixing by 1 Ø22.5 hole; for other operators see pages B3/11 and B3/13.
- For other accessories and empty enclosures, see pages B3/14, B3/15 and A1/3.

Operators for main and Emergency stop switch-disconnectors

Handle	Front plate mm	Reference
Red, padlockable with 1 padlock (Ø4 to Ø6)	Yellow 45 x 45	**KCC1YZ**
Red, padlockable with up to 3 padlocks (Ø4 to Ø8)	Yellow 60 x 60	**KCD1PZ**

Operators for main switch-disconnectors

Handle	Front plate mm	Reference
Black, padlockable with up to 3 padlocks (Ø4 to Ø8)	Black 60 x 60	**KAD1PZ**

Accessories for door interlocking

For rear fixing switch-disconnectors mounted at the back of an enclosure, in addition to a direct operator

Description	Front plate	Distance enclosure back/door	Sold in lots of	Unit reference
	mm	mm		
Shaft extensions	–	300…330	1	**VZN17**
		400…430	1	**VZN30**
Door interlock plate	45 x 45 or 60 x 60	–	5	**KZ32**
Plate for door mounting	45 x 45 or 60 x 60	–	5	**KZ83**

TeSys protection components

VARIO switch-disconnectors for high performance applications

Complete units

- 3-pole rotary switch-disconnectors, 12 to 175 A
- Marking on operator ○ |.
- Padlockable operating handle (padlocks not supplied).
- Degree of protection IP 65.

PF511159.tif



VCF 0

PF511160.tif



VCF 5

PF511161.tif



VCCF 0

Main and Emergency stop switch-disconnectors for door mounting

Handle	Front plate mm	Fixing	Rating A	Reference	Weight kg
Red, padlockable with up to 3 padlocks (Ø4 to Ø8)	Yellow 60 x 60	Ø22.5	12	**VCD02**	0.215
			20	**VCD01**	0.215
			25	**VCD0**	0.215
			32	**VCD1**	0.215
			40	**VCD2**	0.215
		4 screws	12	**VCF02**	0.250
			20	**VCF01**	0.250
			25	**VCF0**	0.250
			32	**VCF1**	0.250
			40	**VCF2**	0.250
			63	**VCF3**	0.560
			80	**VCF4**	0.560
Red, long, padlockable with up to 3 padlocks (Ø4 to Ø8)	Yellow 90 x 90	4 screws	125	**VCF5**	1.200
			175	**VCF6**	1.200

Main and Emergency stop switch-disconnectors for mounting at back of an enclosure (1)

Handle	Front plate mm	Fixing	Rating A	Reference	Weight kg
Red, padlockable with up to 3 padlocks (Ø4 to Ø8)	Yellow 60 x 60	Ø22.5	12	**VCCD02**	0.392
			20	**VCCD01**	0.392
			25	**VCCD0**	0.392
			32	**VCCD1**	0.392
			40	**VCCD2**	0.392
		4 screws	12	**VCCF02**	0.527
			20	**VCCF01**	0.527
			25	**VCCF0**	0.527
			32	**VCCF1**	0.527
			40	**VCCF2**	0.527
			63	**VCCF3**	0.440
			80	**VCCF4**	0.680
Red, long, padlockable with up to 3 padlocks (Ø4 to Ø8)	Yellow 90 x 90	4 screws	125	**VCCF5**	1.320
			175	**VCCF6**	1.320

*(1) Unit supplied with a shaft extension **VZN 17** or **VZ18** and a door interlock plate **KZ 32** or **KZ 74** (see page B3/14).*

Characteristics: pages B3/18to B3/21
Dimensions: pages B3/24 and B3/25
Schemes: page B3/25

TeSys protection components

VARIO switch-disconnectors for high performance applications

Complete units

- 3-pole rotary switch-disconnectors, 12 to 175 A
- Marking on operator ○┘.
- Padlockable operating handle (padlocks not supplied).
- Degree of protection IP 65.



VBD 0



VBF 4

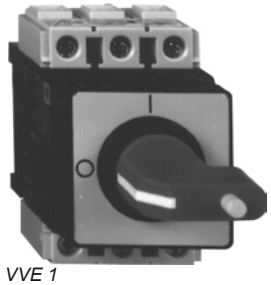

VVE 1

Main switch-disconnectors for door mounting

Handle	Front plate mm	Fixing	Rating A	Reference	Weight kg
Black, padlockable with up to 3 padlocks (Ø4 to Ø8)	Black 60 x 60	Ø22.5	12	**VBD02**	0.215
			20	**VBD01**	0.215
			25	**VBD0**	0.215
			32	**VBD1**	0.215
			40	**VBD2**	0.215
		4 screws	12	**VBF02**	0.250
			20	**VBF01**	0.250
			25	**VBF0**	0.250
			32	**VBF1**	0.250
			40	**VBF2**	0.250
			63	**VBF3**	0.560
			80	**VBF4**	0.560
Red, long, padlockable with up to 3 padlocks (Ø4 to Ø8)	Black 90 x 90	4 screws	125	**VBF5**	1.200
			175	**VBF6**	1.200

Main and Emergency stop switch-disconnectors

For mounting in an enclosure or for modular distribution boards

Handle	Front plate mm	Rating A	Reference	Weight kg
Red, padlockable with 1 padlock (Ø4 to Ø6)	Yellow 45 x 45	25	**VVE0**	0.250
		32	**VVE1**	0.250
		40	**VVE2**	0.250
		63	**VVE3**	0.530
		80	**VVE4**	0.530

Main switch-disconnectors

For mounting in an enclosure or for modular distribution boards

Handle	Front plate mm	Rating A	Reference	Weight kg
Black, not padlockable	Black 45 x 45	25	**VVD0**	0.250
		32	**VVD1**	0.250
		40	**VVD2**	0.250
		63	**VVD3**	0.560
		80	**VVD4**	0.560

Characteristics: pages B3/18to B3/21
Dimensions: pages B3/24 and B3/25
Schemes: page B3/25

TeSys protection components
VARIO switch-disconnectors for high performance applications
Switch bodies, add-on modules, auxiliary contacts (for customer assembly)

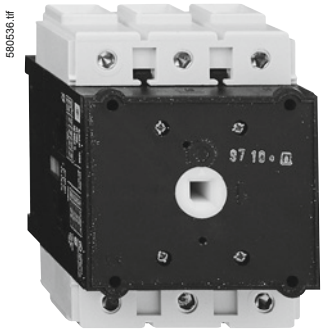

V5



VZ 0



VZ 11



VZ 15

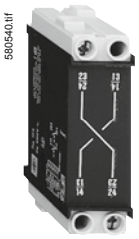

VZ 20

Switch bodies

Description	Rating A	Reference
3-pole switch-disconnectors (1)	12	**V02**
	20	**V01**
	25	**V0**
	32	**V1**
	40	**V2**
	63	**V3**
	80	**V4**
	125	**V5**
	175	**V6**

Add-on modules

Description	Rating A	Reference
Main pole modules	12	**VZ02**
	20	**VZ01**
	25	**VZ0**
	32	**VZ1**
	40	**VZ2**
	63	**VZ3**
	80	**VZ4**
Neutral pole modules with early make and late break contacts (1)	12 to 40	**VZ11**
	63 to 80	**VZ12**
	125 and 175	**VZ13**
Earthing modules	12 to 40	**VZ14**
	63 and 80	**VZ15**
	125 and 175	**VZ16**

Auxiliary contact block modules

Description	Type	Reference
Auxiliary contact block modules with 2 auxiliary contacts	N/O + N/C (2)	**VZ7**
	N/O + N/O	**VZ20**

(1) Protection shrouds are available if required: see page B3/14.
(2) Late make N/O, early break N/C contacts

Characteristics: pages B3/18to B3/21
Dimensions: pages B3/24 and B3/25
Schemes: page B3/25

TeSys protection components
VARIO switch-disconnectors for high performance applications
Switch bodies, add-on modules, auxiliary contacts (for customer assembly)

Maximum number of add-on modules that can be fitted on a switch body

1 add-on module on each side of the switch body

VZ 7 or VZ 20	+	**V0●**	+	VZ 7 or VZ 20		VZ 7	+	**V5**	+	VZ 7
or				or		or				or
VZ 11 or VZ 12	+	**V0**	+	VZ 11 or VZ 12		VZ 20	+	**or**	+	VZ 20
or		**to**		or		or				or
VZ 14 or VZ 15	+		+	VZ 14 or VZ 15		VZ 13	+	**V6**	+	VZ 13
or		**V4**		or		or				or
VZ 0●/VZ 0 to VZ 4	+		+	VZ 0●/VZ 0 to VZ 4		VZ 16	+		+	VZ 16

2 add-on modules on each side of the switch body

VZ 0●	+	VZ 0●	+	**V0●**	+	VZ 0●	+	VZ 7	or	VZ 20	or	VZ 11	or	VZ 14
VZ 0	+	VZ 0	+	**V0**	+	VZ 0	+	VZ 7	or	VZ 20	or	VZ 11	or	VZ 14
VZ 1	+	VZ 1	+	**V1**	+	VZ 1	+	VZ 7	or	VZ 20	or	VZ 11	or	VZ 14
VZ 2	+	VZ 2	+	**V2**	+	VZ 2	+	VZ 7	or	VZ 20	or	VZ 11	or	VZ 14
VZ 3	+	VZ 3	+	**V3**	+	VZ 3	+	VZ 7	or	VZ 20	or	VZ 12	or	VZ 15
VZ 4	+	VZ 4	+	**V4**	+	VZ 4	+	VZ 7	or	VZ 20	or	VZ 12	or	VZ 15

Note: *The add-on modules mounted next to the switch body are main pole modules. Maximum of 3 main pole modules per switch body.*

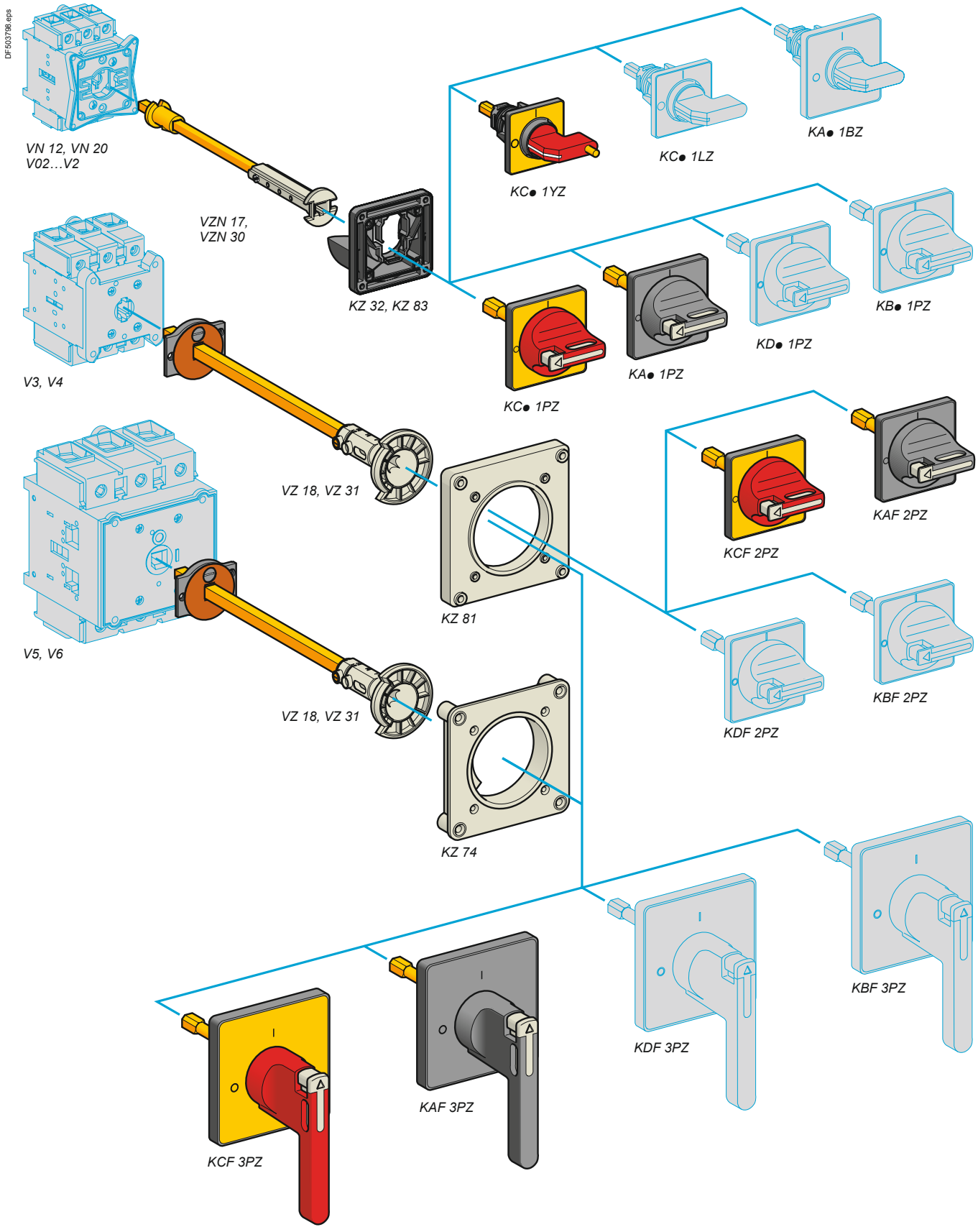
DF503798.eps
VN 12, VN 20
V02…V2
VZN 17,
VZN 30
KZ 32, KZ 83
KC● 1YZ
KC● 1LZ
KA● 1BZ
V3, V4
KC● 1PZ
KA● 1PZ
KD● 1PZ
KB● 1PZ
VZ 18, VZ 31
KZ 81
KCF 2PZ
KAF 2PZ
V5, V6
VZ 18, VZ 31
KZ 74
KDF 2PZ
KBF 2PZ
KCF 3PZ
KAF 3PZ
KDF 3PZ
KBF 3PZ

Protection components
Mini-VARIO and VARIO switch-disconnectors
Operators, handles and front plates
(for customer assembly)

- Marking on operator  .
- Padlockable operating handle (padlocks not supplied).
- Degree of protection IP 65.

Handles and front plates for main and Emergency stop switch-disconnectors

For switch body	Operator			Reference
	Handle	Front plate		
		Dimensions	Fixing	
		mm		
VN 12, VN 20 V02…V2	Red, padlockable with 1 padlock (Ø4 to Ø6)	Yellow 45 x 45	Ø22.5	**KCC1YZ**
			4 screws	**KCE1YZ**
	Red, padlockable with up to 3 padlocks (Ø4 to Ø8)	Yellow 60 x 60	Ø22.5	**KCD1PZ**
			4 screws	**KCF1PZ**
V3 and V4	Red, padlockable with up to 3 padlocks (Ø4 to Ø8)	Yellow 60 x 60	4 screws	**KCF2PZ**
V5 and V6	Red, long, padlockable with up to 3 padlocks (Ø4 to Ø8)	Yellow 90 x 90	4 screws	**KCF3PZ** (1)

Handles and front plates for main switch-disconnectors

For switch body	Operator			Reference
	Handle	Front plate		
		Dimensions	Fixing	
		mm		
VN 12, VN 20 V02…V2	Black, padlockable with up to 3 padlocks (Ø4 to Ø8)	Black 60 x 60	Ø22.5	**KAD1PZ**
			4 screws	**KAF1PZ**
V3 and V4	Black, padlockable with up to 3 padlocks (Ø4 to Ø8)	Black 60 x 60	4 screws	**KAF2PZ**
V5 and V6	Black, long, padlockable with up to 3 padlocks (Ø4 to Ø8)	Black 90 x 90	4 screws	**KAF3PZ** (1)

*(1) For door mounting of 63 and 80 A switch-disconnectors, adapter plate **KZ 106** must be ordered separately (see page B3/14).*

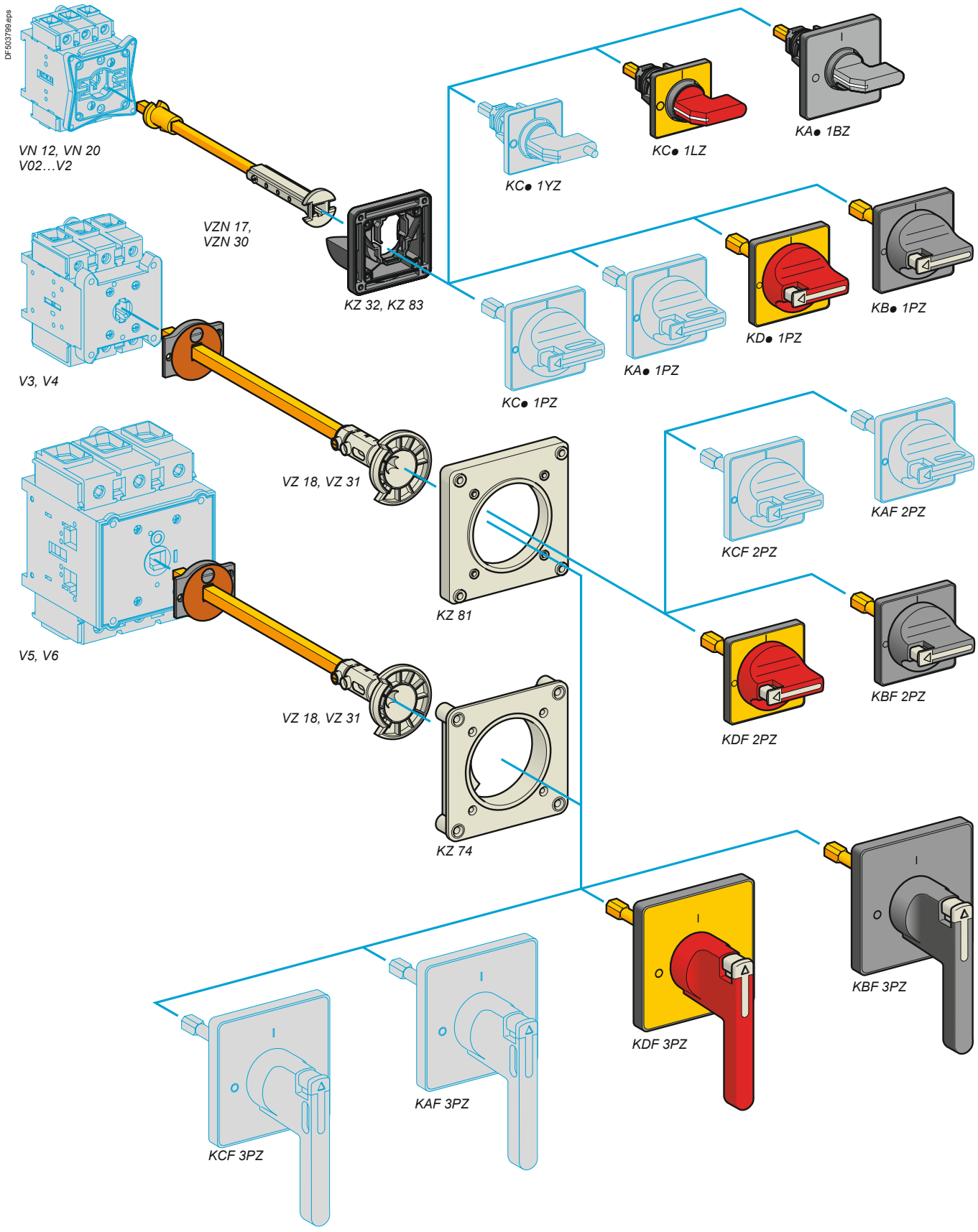
DF503799.eps
VN 12, VN 20
V02…V2
VZN 17,
VZN 30
KZ 32, KZ 83
KC● 1YZ
KC● 1LZ
KA● 1BZ
V3, V4
KC● 1PZ
KA● 1PZ
KD● 1PZ
KB● 1PZ
VZ 18, VZ 31
KZ 81
KCF 2PZ
KAF 2PZ
V5, V6
VZ 18, VZ 31
KDF 2PZ
KBF 2PZ
KZ 74
KCF 3PZ
KAF 3PZ
KDF 3PZ
KBF 3PZ

Protection components
Mini-VARIO and VARIO switch-disconnectors
Operators, handles and front plates
(for customer assembly)

- Marking on operator .
- Degree of protection IP 65.

Handles and front plates for Emergency stop switch-disconnectors

For switch body	Operator			Reference
	Handle	Front plate		
		Dimensions	Fixing	
		mm		
VN 12, VN 20 V02…V2	Red, not padlockable	Yellow 45 x 45	Ø22.5	**KCC1LZ**
			4 screws	**KCE1LZ**
		Yellow 60 x 60	Ø22.5	**KDD1PZ**
			4 screws	**KDF1PZ**
V3 and V4	Red, long, not padlockable	Yellow 60 x 60	4 screws	**KDF2PZ**
V5 and V6	Red, long, not padlockable	Yellow 90 x 90	4 screws	**KDF3PZ** (1)

Handles and front plates for switch-disconnectors

For switch body	Operator			Reference
	Handle	Front plate		
		Dimensions	Fixing	
		mm		
VN 12, VN 20 V02…V2	Black, not padlockable	Black 45 x 45	Ø22.5	**KAC1BZ**
			4 screws	**KAE1BZ**
		Black 60 x 60	Ø22.5	**KBD1PZ**
			4 screws	**KBF1PZ**
V3 and V4	Black, not padlockable	Black 60 x 60	4 screws	**KBF2PZ**
V5 and V6	Black, not padlockable	Black 90 x 90	4 screws	**KBF3PZ** (1)

*(1) For door mounting of 63 and 80 A switch-disconnectors, adapter plate **KZ 106** must be ordered separately (see next page).*

Protection components

Mini-VARIO and VARIO switch-disconnectors

Accessories

580583.tif



VZ 8

580984.tif



VZ 26

580526.tif



VZ 18

580585.tif

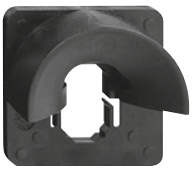

KZ 32

580527.tif

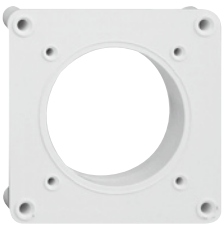

KZ 81

Input terminal protection shrouds

Description	For use on	Reference
For switch bodies (3-pole shroud)	V02…V2	**VZ8**
	V3 and V4	**VZ9**
	V5 and V6	**VZ10**
For add-on pole modules (single-pole shroud)	VZ 02…VZ 2, VZ 11, VZ 14	**VZ26**
	VZ 3, VZ 4, VZ 12, VZ 15	**VZ27**
	VZ 13, VZ 16	**VZ28**
For contact blocks with 2 auxiliary contacts	–	**VZ29**

Components for door interlocking

For rear fixing switch-disconnectors mounted at the back of an enclosure, in addition to a direct operator

Description	For use on	Distance enc. back/door	Sold in lots of	Unit reference
		mm		
Shaft extensions	VN 12, VN 20 V02…V2	300…330	1	**VZN17** (1)
		400…430	1	**VZN30** (1)
	V02…V2	300…330	1	**VZ17**
		400…430	1	**VZ30**
	V3 and V4	300…320	1	**VZ18**
		400…420	1	**VZ31**
	V5 and V6	330…350	1	**VZ18**
		430…450	1	**VZ31**
Door interlock plates	VN 12, VN 20 V02…V2	–	5	**KZ32**
	V3…V6	–	5	**KZ74**

Description	For use on	Front plate dimensions	Sold in lots of	Unit reference
		mm		
Plates for door mounting of handles with 4 screw fixing	VN 12, VN 20 V02…V2	45 x 45 or 60 x 60	5	**KZ83**
	V3…V6	60 x 60 or 90 x 90	5	**KZ81**
Adapter plate for switch-disconnectors	V3 and V4	90 x 90	5	**KZ106**

(1) Can be used with V02 to V2 switches.

Characteristics: pages B3/18to B3/21
Dimensions: pages B3/24 and B3/25
Schemes: page B3/25

Protection components

Mini-VARIO and VARIO switch-disconnectors

Accessories

812783.tif

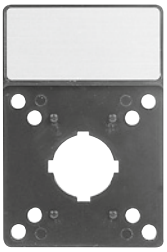

KZ 15

580528.tif



KZ 67

812785.tif



Z01

Accessories for operators

Description	For use on	Front plate dimensions	Sold in lots of	Unit reference
		mm		
Legend holder with silver coloured blank legend plate	Front plate	45 x 45	5	**KZ13**
		60 x 60	5	**KZ15**
		90 x 90	5	**KZ103**
Legend holders without legend plate	Front plate	45 x 45	20	**KZ14**
		60 x 60	10	**KZ16**
		90 x 90	5	**KZ101**
Silver coloured blank legend plates for engraving by customer	KZ 14	–	20	**KZ76**
	KZ 16	–	10	**KZ77**
	KZ 101	–	5	**KZ100**
Seals	VN 12, VN 20	45 x 45	5	**KZ65**
	V02…V2	60 x 60	5	**KZ66**
	V3 and V4	60 x 60	5	**KZ62**
	V3…V6	90 x 90	5	**KZ67**
Tightening tool	For operators with Ø22.5 fixing	–	5	**Z01**

Characteristics: pages B3/18to B3/21
Dimensions: pages B3/24 and B3/25
Schemes: page B3/25

Vario

Technical Data for Designers

Contents

Characteristics ..... B3/18 to B3/21
Mini Vario:
> Dimensions ..... B3/22 to B3/23
> Schemes B3/23
Vario:
> Dimensions ..... B3/24 to B3/25
> Schemes B3/25

Safety control and protection solutions
Mini-VARIO and VARIO switch-disconnectors

Characteristics

Environment

Switch type (bare type)				VN 12 VZN 12	V02 VZ 02	VN 20 VZN 20	V01 VZ 01	V0 VZ 0	VVD 0 VVE 0	V1 VZ 1	VVD 1 VVE 1
Conforming to standards				IEC 60947-3							
Product certifications				UL, CSA, GL							
Protective treatment				"TC"							
Degree of protection with protection shroud				IP 20 conforming to IEC 60529							
Ambient air temperature			**° C**	-20…+50							
Flame resistance			**° C**	960 conforming to IEC 60695-2-1							
Shock resistance 1/2 sine wave = 11ms conforming to IEC60068-2-27			**gn**	15	30	15	30				
Vibration resistance 10…150 Hz conforming to IEC 60068-2-6			**gn**	5	1						

Electrical characteristics, a.c. operation

Switch type (bare type)				VN 12 VZN 12	V02 VZ 02	VN 20 VZN 20	V01 VZ 01	V0 VZ 0	VVD 0 VVE 0	V1 VZ 1	VVD 1 VVE 1
Rated operational voltage (Ue)			**V**	690							
Rated impulse withstand voltage (Uimp)			**kV**	6	8	6	8				
Conventional thermal currents in free air (Ith) and rated uninterrupted (Iu)			**A**	12		20		25		32	
Conventional thermal current in enclosure (Ithe)			**A**	10		16		20		25	
Rated operational power and current	AC-21A/22A	230…690 V	**A**	12		20		25		32	
	AC-23A	230 V	**A/kW**	10.6/3		14/4		19.7/5.5			
		240 V	**A/kW**	10.6/3		14/4		19.9/5.5		18.9/5.5	
		400 V	**A/kW**	8.1/4		11/5.5		14.5/7.5		21.8/11	
		415 V	**A/kW**	8.1/4		11/5.5		14/7.5		21/11	
		500 V	**A/kW**	8.9/5.5		11.9/7.5		16.7/11			
		690 V	**A/kW**	8.6/7.5		12.3/11		17.5/15			
Rated operational power	AC -3	230/240 V	**kW**	1.5		3		4			
		400/415 V	**kW**	3		4		5.5		7.5	
		500 V	**kW**	4		5.5		7.5			
		690 V	**kW**	4	5.5		7.5	11			
Intermittent duty class				30							
Characteristics in normal operating conditions	Rated making capacity AC-21A/22A/23A (I rms)		**A/** 400 V	120		200		250		320	
	Rated breaking capacity AC-21A/22A/23A (I rms)		**A/** 400 V	120		200				250	
Short-circuit characteristics	Permissible rms short time rating (Icw)		**A/** 400V/1s	140	300	140	300			384	
	Rated making capacity under short-circuit conditions (Icm) I peak		**kA/** 400 V	0.5	1	0.5	1				
	Rated conditional short-circuit current (I rms) with aM/gG fuses		**kA/** 400 V	6	10	6	10				
			A	12		20		25		35	

V2 VZ 2	VVD 2 VVE 2	V3 VZ 3	VVD 3 VVE 3	V4 VZ 4	VVD 4 VVE 4	V5	V6	VZ7 VZ2 0	VZN 05 VZN 06
IEC 60947-3								IEC 60947-5	
UL, CSA, GL									
“TC”									
IP 20 conforming to IEC 60529									
-20…+50									
960 conforming to IEC 60695-2-1									
30								–	
1								–	

V2 VZ 2	VVD 2 VVE 2	V3 VZ 3	VVD 3 VVE 3	V4 VZ 4	VVD 4 VVE 4	V5	V6	VZ7 VZ2 0	VZN 05 VZN 06
690									
8									6
40		63		80		125	175	12	6
32		50		63		100	140	10	4
40		63		80		125	160	Ie/AC-15	
25.8/7.5		50.3/15		61.2/18.5		71.9/22	96.6/30	6 A	
24.8/7.5		48.2/15		58.5/18.5		68/22	92.7/30	6 A	
29/15		41.5/22		57/30		68.5/37	83/45	4 A	
28/15		40/22		55/30		66/37	80/45	4 A	
28.5/18.5		44/30		54/37		64.5/45	79/55	2 A	
17.5/15		25/22		33/30		42/37	49/45	1 A	
5.5		11		15		22	30	–	
11		18.5		22		30	37	–	
15		22		30		37	45	–	
11		18.5				30	37	–	
30								–	
400		630		800		1250	1750	–	
320		500		640		1000	1400	–	
480		756		960		1500	2100	–	
1		2.1				2.8		–	
10								1	
50		63		80		125	200	16	1.6

Safety control and protection solutions
Mini-VARIO and VARIO switch-disconnectors

Characteristics

Electrical characteristics, d.c. operation

Switch type (bare type)				VN 12 VZN 12	V02 VZ 02	VN 20 VZN 20	V01 VZ 01	V0 VZ 0	VVD 0 VVE 0	V1 VZ 1	VVD 1 VVE 1
Rated operational current DC-1 (L/R = 1ms)	24 V	1 contact	**A**	12		20		25		32	
		2 contacts	**A**	12		20		25		32	
		3 contacts	**A**	12		20		25		32	
	48 V	1 contact	**A**	12		20		25		32	
		2 contacts	**A**	12		20		25		32	
		3 contacts	**A**	12		20		25		32	
	60 V	1 contact	**A**	12		20		25		32	
		2 contacts	**A**	12		20		25		32	
		3 contacts	**A**	12		20		25		32	
	110 V	1 contact	**A**	1.5		2		9		10	
		2 contacts	**A**	8		10		12		16	
		3 contacts	**A**	12		20		25		32	
	220 V	1 contact	**A**	1.5		2		2.5		3	
		2 contacts	**A**	7		8		10		12	
		3 contacts	**A**	10		14		16		20	
	250 V	1 contact	**A**	0.6		0.7		0.8		1	
		2 contacts	**A**	3		4		6		8	
		3 contacts	**A**	8		10		12		16	
Rated operational current DC-2 to DC-5 (L/R = 1ms)	24 V	1 contact	**A**	12		20		25		32	
		2 contacts	**A**	12		20		25		32	
		3 contacts	**A**	12		20		25		32	
	48 V	1 contact	**A**	12		20		25		32	
		2 contacts	**A**	12		20		25		32	
		3 contacts	**A**	12		20		25		32	
	60 V	1 contact	**A**	10		14		16		20	
		2 contacts	**A**	12		20		25		32	
		3 contacts	**A**	12		20		25		32	
	110 V	1 contact	**A**	1.5		2		2.5		3	
		2 contacts	**A**	3		4		5		6	
		3 contacts	**A**	12		20		25		32	
	220 V	1 contact	**A**	0.4		0.5		0.5		0.8	
		2 contacts	**A**	1.4		1.5		1.5		2	
		3 contacts	**A**	1		2		3		4	
	250 V	1 contact	**A**	0.3		0.4		0.5		0.8	
		2 contacts	**A**	0.4		0.6		0.8		1	
		3 contacts	**A**	1.2		2.4		1.6		2	

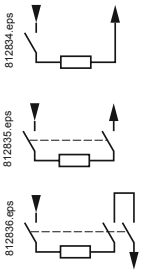

Other characteristics

Switch type (bare type)			VN 12 VZN 12	V02 VZ 02	VN 20 VZN 20	V01 VZ 01	V0 VZ 0	VVD 0 VVE 0	V1 VZ 1	VVD 1 VVE 1
Mechanical durability (millions of operating cycles)			0.05	0.1	0.05	0.1				
Electrical durability in cat. AC-21 (millions of operating cycles)			0.05	0.1	0.05	0.1				
Electrical durability in cat. DC-1 to 5 (operating cycles)			30000							
Suitable for isolation			Yes							
Cabling	Flexible cable + cable end	**mm²**	4	6	4	6				
	Solid cable	**mm²**	4	10	4	10				
Tightening torque		**N.m**	0.7	2.1	0.7	2.1				

V2 VZ 2	VVD 2 VVE 2	V3 VZ 3	VVD 3 VVE 3	V4 VZ 4	VVD 4 VVE 4	V5	V6	VZ7 VZ2 0	VZN 05 VZN 06
40		63		80		125	175	8 (Ie/DC-11)	
40		63		80		125	175	–	
40		63		80		125	175	–	
40		63		80		125	175	8 (Ie/DC-11)	
40		63		80		125	175	–	
40		63		80		125	175	–	
35		40		50		60	70	4 (Ie/DC-11)	
40		63		80		125	175	–	
40		63		80		125	175	–	
12		20		25		30	12	2 (Ie/DC-11)	
20		63		80		125	175	–	
40		63		80		125	175	–	
4		6		8		12	15	1 (Ie/DC-11)	
14		25		30		40	50	–	
25		30		40		80	100	–	
2		4		5		3	10	0.8 (Ie/DC-11)	
12		20		25		30	40	–	
20		30		40		50	61	–	
40		63		80		125	175	–	
40		63		80		125	175	–	
40		63		80		125	175	–	
40		63		80		125	175	–	
40		63		80		125	175	–	
40		63		80		125	175	–	
25		40		50		60	70	–	
40		63		80		125	175	–	
40		63		80		125	175	–	
5		6		8		10	12	–	
8		10		20		22	24	–	
40		50		63		70	80	–	
1		1.5		2		2.2	2.4	–	
3		4		6		7	8	–	
7		10		15		16	13	–	
1		1.2		1.5		1.6	1.8	–	
2		3		6		7	8	–	
6		8		10		12	14	–	

V2 VZ 2	VVD 2 VVE 2	V3 VZ 3	VVD 3 VVE 3	V4 VZ 4	VVD 4 VVE 4	V5	V6	VZ7 VZ2 0	VZN 05 VZN 06
0.1		0.03						0.1	0.05
0.1		0.03						0.1 (AC-15)	0.05
30000								30000 (DC-11)	
Yes								–	
6		16				70		2 x 0.75…1.5	
10		25				95		2 x 1…2.5	
2.1		4				22.6		0.7	

Safety control and protection solutions

Mini-VARIO switch-disconnectors, 12 and 20 A

Dimensions

Switch-disconnectors

Switch bodies VN 12, VN 20

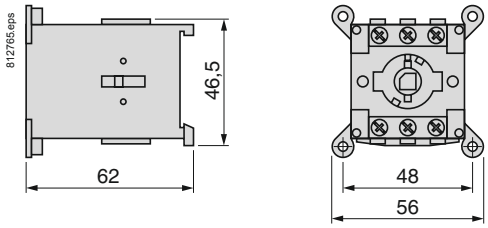

Add-on modules VZN 12, VZN 20

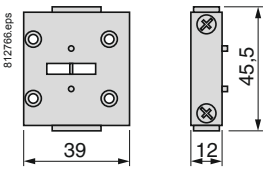

Add-on modules VZN 11, VZN 14 VZN 05 and VZN 06

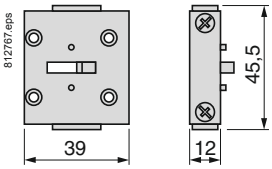

Mounting

Switch-disconnector mounted on enclosure door

VN 12, VN 20
Single hole fixing

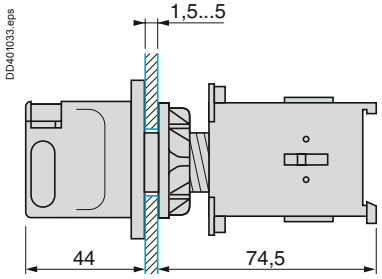

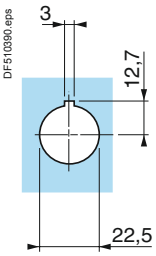

VN 12, VN 20
4 screw fixing

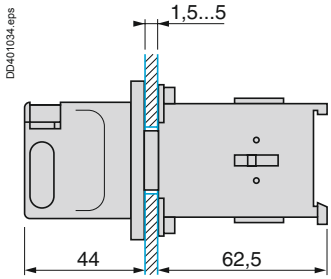

45 x 45 front plate

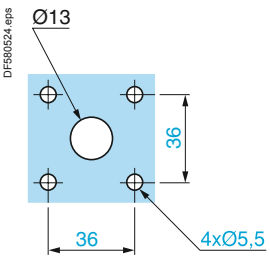

60 x 60 front plate

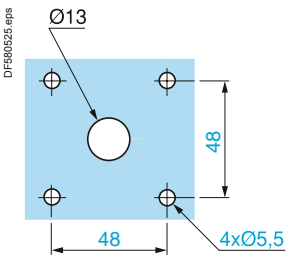

Characteristics:
pages B3/18 to B3/21

References:
pages B3/2 to B3/5

Schemes:
page B3/23

Safety control and protection solutions

Mini-VARIO switch-disconnectors, 12 and 20 A

Mounting (continued)

Switch-disconnector mounted at back of enclosure with shaft extension VZN 17 or VZN 30 (clip-on mounting on ⊔ rail)

VN 12, VN 20

Single hole fixing

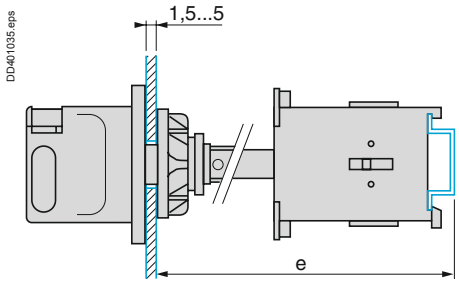

4 screw fixing

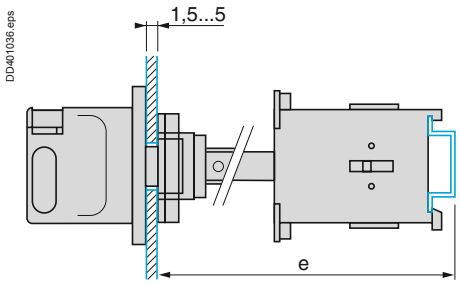

	Shaft extension	Distance (e) enclosure back/door
		mm
VN 12, VN 20	VZN 17	300…330
	VZN 30	400…430

Schemes

Switch body VN 12, VN 20

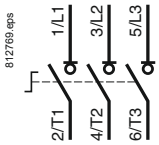

Main pole module VZN 12, VZN 20



Neutral pole module VZN 11



Auxiliary contact blocks

VZN 05



VZN 06



Switch-disconnectors

Safety control and protection solutions

VARIO switch-disconnectors, 12 to 175 A

Dimensions

Switch-disconnectors

Switch bodies V0●, V0 to V2

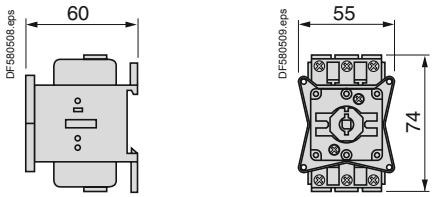

Switch bodies V3 to V6

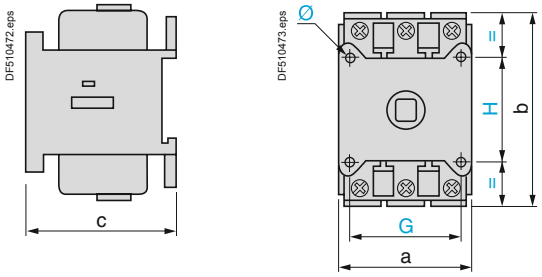

	a	b	c	G	H	Ø
V3, V4	60	83	65	48	48	5.5
V5, V6	90	125	90	68	68	5.5

Add-on modules VZ 02 to VZ 4 and VZ 11 to VZ 16

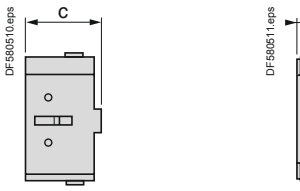

Add-on modules VZ 7, VZ 20

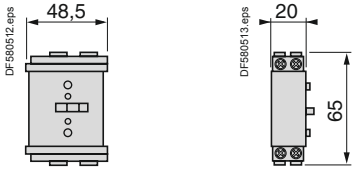

	a	b	c
VZ 02 and VZ 01, VZ 0 to VZ 2, VZ 11, VZ 14	16	74	35
VZ 3, VZ 4, VZ 12, VZ 15	20	83	46
VZ 13, VZ 16	30	125	63

Mounting

Switch-disconnector mounted on enclosure door

Single hole fixing V0●, V0 to V2

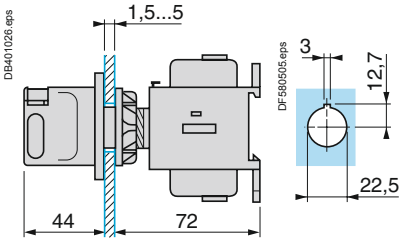

4 screw fixing V0●, V0 to V4

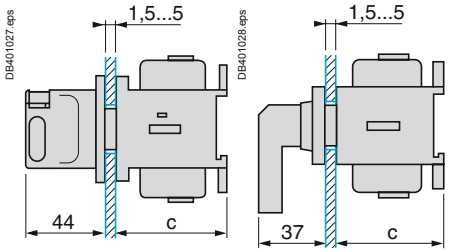

	c
V0●, V0 to V2	60
V3, V4	65

4 screw fixing 45 x 45 front plate V0●, V0 to V2

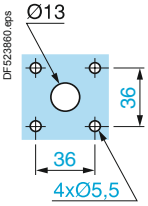

4 screw fixing 60 x 60 front plate V0●, V0 to V4

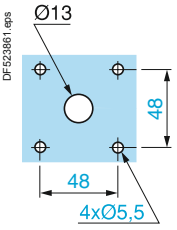

V5 and V6. 4 screw fixing

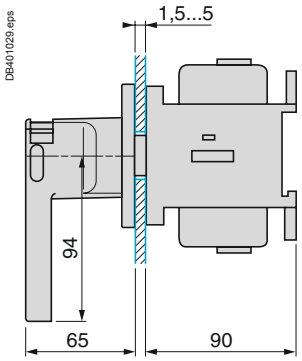

90 x 90 front plate

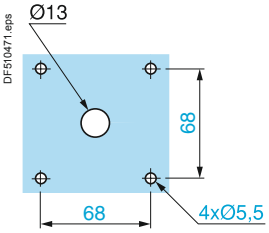

Characteristics:
pages B3/18 to B3/21

References:
pages B3/6 to B3/9

Schemes:
pageB3/25

Safety control and protection solutions

VARIO switch-disconnectors, 12 to 175 A

Mounting (continued)

Switch-disconnector mounted at back of enclosure

4 screw fixing
V0●, V0 to V2 with shaft extension VZ 17 or VZ 30 (clip-on mounting on ⊔ rail possible for V0● to V2)

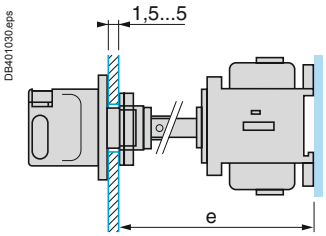

Single hole fixing
V3 to V4 with shaft extension VZ 18 or VZ 31

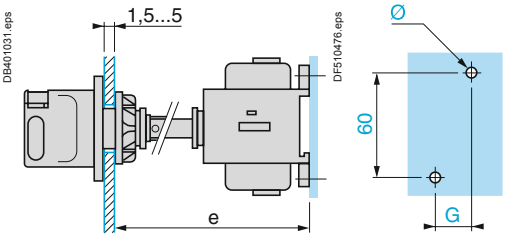

V5 and V6 with shaft extension VZ 18 or VZ 31

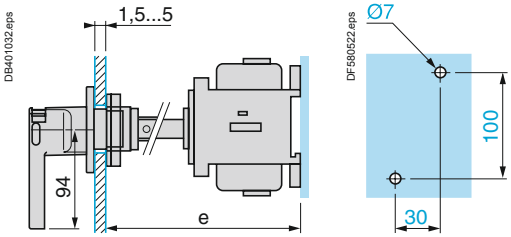

	Shaft extension	Distance (e) enc.back/door	Ø	G
		mm		
V02 and V01 V0 to V2	VZ 17	300…330	2 x 4.2	15
	VZ 30	400…430	2 x 4.2	15
V3 and V4	VZ 18	300…320	2 x 5	20
	VZ 31	400…420	2 x 5	20

	Shaft extension	Distance (e) enc. back/door
		mm
V5 and V6	VZ 18	300…350
	VZ 31	430…450

Switch-disconnectors for modular distribution boards

VV● 0 to VV● 2

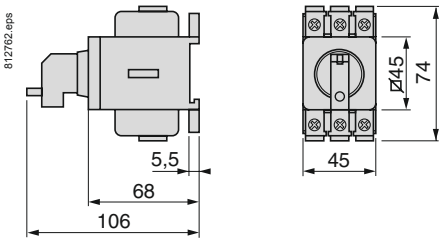

VV● 3 to VV● 4

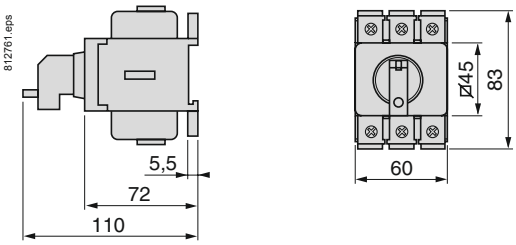

Schemes

Switch body

V02 and V01
V0 to V6

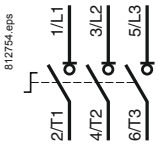

Main pole module

VZ 02 and VZ 01
VZ 0 to VZ 4



Neutral pole module

VZ 11 to VZ 13



Auxiliary contact blocks

VZ 7

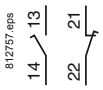

VZ 20



Characteristics:
pages B3/18 to B3/21

References:
pages B3/6 to B3/9

Fuse carriers
TeSys DF, LS, GK

Fuse carriers - TeSys DF, LS, GK

Type of product	Range		Pages
For protection of control circuits or transformer TeSys DF and accessories	Up to **25**, **32**, **50** or **125** A	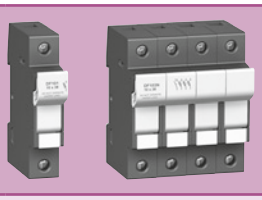	B4/2
For protection of control circuits or transformer TeSys DF – For North Amercan market	Up to **30** A	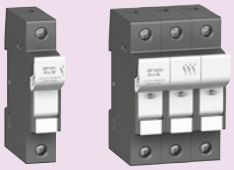	B4/4
For protection of motors or transformers TeSys LS, GK and accessories	Up to **25**, **32**, **50** or **125** A	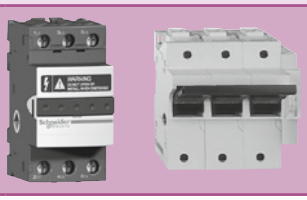	B4/5

Technical Data for Designers B4/9

Fuse carriers

For protection of control circuits or transformers

TeSys DF



DF10 1

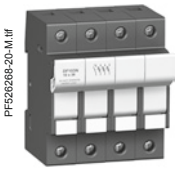

DF10 3N



DF14 1



DF14 3NC



DF221NV

DF22 1



DF22 3NC



DF10 1NV

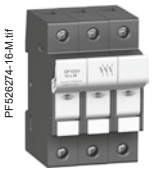

DF10 3V



DF14 1NV



DF14 3VC



DF22 1NV



DF22 3VC

Fuse carriers [1]

Conventional thermal current (Ith)	Size of cartridge fuse or link	Composition	Sold in lots of	Unit reference
A	mm			
25	8.5 x 31.5	1 P	12	**DF81**
		N	12	**DF10N**
		1 P + N [2]	6	**DF81N**
		2 P	6	**DF82**
		3 P	4	**DF83**
		3 P + N [2]	3	**DF83N**
32	10 x 38	1 P	12	**DF101**
		N	12	**DF10N**
		1 P + N [2]	6	**DF101N**
		2 P	6	**DF102**
		3 P	4	**DF103**
		3 P + N [2]	3	**DF103N**
50	14 x 51	1 P	6	**DF141**
		N	6	**DF14N**
		1 P + N [2]	3	**DF141N**
		2 P	3	**DF142**
		3 P	2	**DF143C** [3]
		3 P + N [2]	1	**DF143NC** [3]
125	22 x 58	1 P	6	**DF221**
		N	6	**DF22N**
		1 P + N [2]	3	**DF221N**
		2 P	3	**DF222**
		3 P	2	**DF223C** [3]
		3 P + N [2]	1	**DF223NC** [3]

Fuse carriers with "blown fuse" indicators (neon) [1] [4]

Conventional thermal current (Ith)	Size of cartridge fuse or link	Composition	Sold in lots of	Unit reference
A	mm			
25	8.5 x 31.5	1 P	12	**DF81V**
		1 P + N [2]	6	**DF81NV**
		2 P	6	**DF82V**
		3 P	4	**DF83V**
		3 P + N [2]	3	**DF83NV**
32	10 x 38	1 P	12	**DF101V**
		1 P + N [2]	6	**DF101NV**
		2 P	6	**DF102V**
		3 P	4	**DF103V**
		3 P + N [2]	3	**DF103NV**
50	14 x 51	1 P	6	**DF141V**
		1 P + N [2]	3	**DF141NV**
		2 P	3	**DF142V**
		3 P	2	**DF143VC** [3]
		3 P + N [2]	1	**DF143NVC** [3]
125	22 x 58	1 P	6	**DF221V**
		1 P + N [2]	3	**DF221NV**
		2 P	3	**DF222V**
		3 P	2	**DF223VC** [3]
		3 P + N [2]	1	**DF223NVC** [3]

(1) Each pole can be marked. A clip-in marker holder is provided for this purpose. Clip-in markers type AB1 R● or AB1 G● can also be used.
(2) N: neutral pole fitted with a locked tubular link as standard.
(3) A letter "C" in the reference indicates that the fuse carrier can be fitted with auxiliary early break, "blown fuse" signalling and "fuse present" signalling contacts.
(4) Operational voltage of the blown fuse indicator: 110 V...690 V.

Characteristics: page B4/10 | Substitution: page B4/3 | Dimensions: page B4/11 | Schemes: page B4/11

Fuse carriers
For protection of control circuits or transformers

PF106836-21-M.tif



DF14 AM●

524196.eps

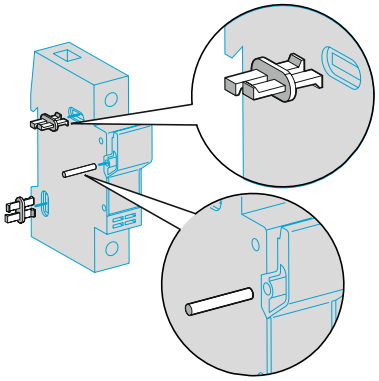

Detail of assembly clip and pin mounting

Accessories

Auxiliary early break and "blown fuse" signalling contacts (1)

Fuse carriers to be equipped	Size of cartridge fuse or link	Number of contacts	Sold in lots of	Unit reference
DF14 (3 P or 3 P + N)	14 x 51	1	1	**DF14AM1**
		2	1	**DF14AM2**
DF22 (3 P or 3 P + N)	22 X 58	1	1	**DF22AM1**
		2	1	**DF22AM2**

Fuse carrier assembly kits (2)

Fuse carriers to be assembled	Size of cartridge fuse or link	Composition	Sold in lots of	Unit reference
DF8	8.5 x 31.5	1 pin, 2 clips	12	**DF10AP**
DF10	10 x 38			
DF14	14 x 51	1 pin, 3 clips	10	**DF14AP**
DF22	22 x 58	1 pin, 3 clips	10	**DF22AP**

Marking accessories

Description	Composition	Marking	Sold in lots of	Unit reference
Clip-in markers	Strip of 10 identical numbers or letters	0…9	25	**AB1R●** (3)
		A…Z	25	**AB1G●** (3)

Substitution

Fuse carriers

Old range			New range	
Reference	Size of cartridge fuse or link	Composition	Reference w/o indicator	Reference with indicator
DF6 AB08	8.5 x 31.5	1 P	**DF81**	**DF81V**
DF6 AB10	10 x 38	1 P	**DF101**	**DF101V**
DF6 N10	8.5 x 31.5 or 10 x 38	1 N	**DF10N**	**–**
GK1 CC	8.5 x 31.5	1 P + N	**DF81N**	**DF81NV**
GK1 CD	8.5 x 31.5	2 P	**DF82**	**DF82V**
GK1 CF	8.5 x 31.5	3 P	**DF83**	**DF83V**
GK1 CH	8.5 x 31.5	3 P + N	**DF83N**	**DF83NV**
GK1 DC	10 x 38	1 P + N	**DF101N**	**DF101NV**
GK1 DD	10 x 38	2 P	**DF102**	**DF102V**
GK1 DF	10 x 38	3 P	**DF103**	**DF103V**
GK1 DH	10 x 38	3 P + N	**DF103N**	**DF103NV**
GK1 EB	14 x 51	1 P	**DF141**	**DF141V**
GK1 EN	14 x 51	1 N	**DF14N**	**–**
GK1 EC	14 x 51	1 P + N	**DF141N**	**DF141NV**
GK1 ED	14 x 51	2 P	**DF142**	**DF142V**
GK1 EF	14 x 51	3 P	**DF143C**	**DF143VC**
GK1 EH	14 x 51	3 P + N	**DF143NC**	**DF143NVC**
GK1 FB	22 x 58	1 P	**DF221**	**DF221V**
GK1 FN	22 x 58	1 N	**DF22N**	**–**
GK1 FC	22 x 58	1 P + N	**DF221N**	**DF221NV**
GK1 FD	22 x 58	2 P	**DF222**	**DF222V**
GK1 FF	22 x 58	3 P	**DF223C**	**DF223VC**
GK1 FH	22 x 58	3 P + N	**DF223NC**	**DF223NVC**

Fuse carrier assembly kits

Old range		New range
Reference	Size of cartridge fuse or link	Reference
GK1 AP2	8.5 x 31.5 or 10 x 38	**DF10AP**
GK1 AP3	8.5 x 31.5 or 10 x 38	**DF10AP**
	14 x 51	**DF14AP**
GK1 AP4	8.5 x 31.5 or 10 x 38	**DF10AP**
	22 x 58	**DF22AP**
GK1 AP5	14 x 51	**DF14AP**
GK1 AP6	14 x 51	**DF14AP**
	22 x 58	**DF22AP**
GK1 AP9	22 x 58	**DF22AP**

(1) These auxiliary contacts provide the following functions: early break, "blown fuse" signalling (if the fuse carrier is fitted with striker fuses) and "fuse present" signalling.
(2) 1 pin and 2 clips are required to assemble two DF8 or DF10 fuse carriers together.
1 pin and 3 clips are required to assemble two DF14 or DF22 fuse carriers together.
*(3) When ordering, replace the ● in the reference with the number or letter required. Example: **AB1-R1** or **AB1-GA.***

Characteristics: page B4/10
Dimensions: page B4/11
Schemes: page B4/11

Fuse carriers for the North American market

For protection of control circuits or transformers

References



DFCC 1



DFCC 3V

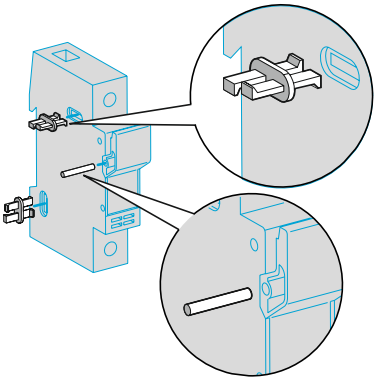

Detail of assembly clip and pin mounting

Fuse carriers (1)

Conventional thermal current (Ith)	Size of cartridge fuse or link	Composition	Sold in lots of	Unit reference
A				
30	Class CC	1 P	12	**DFCC1**
		2 P	12	**DFCC2**
		3 P	6	**DFCC3**

Fuse carriers with "blown fuse" indicators (neon) (1) (2)

Conventional thermal current (Ith)	Size of cartridge fuse or link	Composition	Sold in lots of	Unit reference
A				
30	Class CC	1 P	12	**DFCC1V**
		2 P	6	**DFCC2V**
		3 P	6	**DFCC3V**

Fuse carrier assembly kits (3)

Fuse carriers to be assembled	Size of cartridge fuse or link	Composition	Sold in lots of	Unit reference
DFCC	Class CC	1 pin, 2 clips	12	**DF10AP**

Marking accessories

Description	Composition	Marking	Sold in lots of	Unit reference
Clip-in markers	Strip of 10 identical numbers or letter	0…9	25	**AB1R●** (4)
		A…Z	25	**AB1G●** (4)

(1) Each pole can be marked. A clip-in marker holder is provided for this purpose. Clip-in markers type AB1 R● or AB1 G● can also be used.
(2) Operational voltage of the blown fuse indicator: 230 V...690 V.
(3) 1 pin and 2 clips are required to assemble two DFCC fuse carriers together.
*(4) When ordering, replace the p in the reference with the number or letter required. Example: **AB1 R1** or **AB1 GA**.*

Characteristics: page B4/10
Dimensions: page B4/13
Schemes: page B4/13

Fuse carriers
For protection of motors or transformers

TeSys LS, GK

PF526399.tif



LS1 D323

PF526400.tif



LS1 D32

PF526401.tif

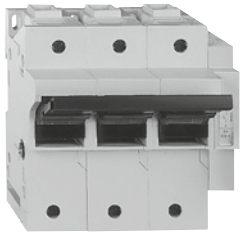

GK1 FK

PF526400.tif



LS1 D32

500505_1.tif



+ LA8 D324

3-pole basic blocks

Connection by spring terminals

Rating	Cartridge fuse size	Number of early break contacts (1)	Single-phase protection device (2)	Reference (3)	Weight kg
25 A	10 x 38	– (4)	Without	**LS1D323**	0.270

Connection by screw clamp terminals or connectors

32 A	10 x 38	– (4)	Without	**LS1D32**	0.300
50 A	14 x 51	1	Without	**GK1EK**	0.430
			With	**GK1EV**	0.470
		2	Without	**GK1ES**	0.470
			With	**GK1EW**	0.510
125 A	22 x 58	1	Without	**GK1FK**	0.860
			With	**GK1FV**	0.900
		2	Without	**GK1FS**	0.900
			With	**GK1FW**	0.940

4-pole basic blocks

Connection by screw clamp terminals or connectors

32 A	10 x 38	– (4)	Without	**LS1D32 + LA8D324** (5)	0.300
50 A	14 x 51	1	Without	**GK1EM**	0.570
			With	**GK1EY**	0.600
		2	Without	**GK1ET**	0.610
			With	**GK1EX**	0.650
125 A	22 x 58	1	Without	**GK1FM**	1.090
			With	**GK1FY**	1.130
		2	Without	**GK1FT**	1.130
			With	**GK1FX**	1.160

Fuse carriers for the North American market

25 and 30 A basic blocks: please consult your Regional Sales Office.

(1) With 1 or 2 early break contacts to be inserted in the contactor control circuit.
(2) Fuse carriers with single-phase protection device must be fitted with striker fuses.
(3) LS1 D: clips directly onto a 35 mm ⊥ rail or screw fixing.
GK1: clips directly onto a 35 mm ⊥ rail or Telequick mounting plate.
(4) Addition of add-on contact block, see page B4/6.
(5) Can be mounted on left-hand or right-hand side of the basic block.

Fuse carriers
Operators and accessories

TeSys LS, GK

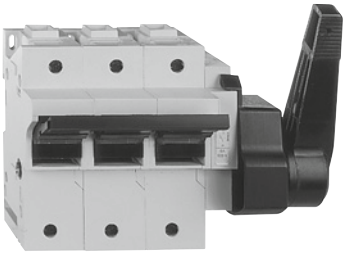
PF526402.tif

GK1 FK + GK1 AP07

Add-on contact blocks

Description	For use on	Mounting	Maximum number	Type of contacts	Sold in lots of	Unit reference
Instantaneous auxiliary contacts (early break contacts)	LS1D32	Front	1	N/O + N/C	10	**GVAE11**
				N/O + N/O	10	**GVAE20**
	LS1D323	Front	1	N/O + N/C	10	**GVAE113**
				N/O + N/O	10	**GVAE203**

Operators

For fuse carrier		For mounting on	Reference
Rating	**Number of poles**		
Side handles			
125 A	3 or 4	Right-hand side	**GK1AP07**
		Left-hand side	**GK1AP08**
Front handles (1)			
32 - 50 - 125 A			Fitted as standard
External handles			
32 A	3 or 4	Right-hand side (IP54)	**LS1D32005** (2)
		Left-hand side (IP54)	**LS1D32006**
50 A	3 or 4	Right-hand side	**GK1AP05**
		Left-hand side	**GK1AP06**
125 A	3 or 4	Right-hand side	**GK1AP07**
		Left-hand side	**GK1AP08**

Padlocking devices (3)

For fuse carrier			Reference
Rating	**Number of poles**	**Single-phase protection device**	
32 A	3 or 4	Without	integral
50 A	3	Without	**GK1AV07**
		With	**GK1AV08**
	4	Without	**GK1AV08**
		With	**GK1AV09**

Links

Tubular links

For fuse carrier		Sold in lots of	Unit reference
Rating	**Number of poles**		
32 A	3 or 4	10	**DK1CB92** (4)
50 A	3 or 4	10	**DK1EB92** (5)
125 A	3 or 4	10	**DK1FA92** (5)

(1) Fitted as standard on 32, 50 and 125 A fuse carriers type GK1.
*(2) Reference **LS1D32005** replaces reference DK1FB005.*
*(3) For the 125 A rating, use side handles **GK1AP07** or **GK1AP08**.*
*(4) For use on a neutral circuit, the tubular link can be interlocked with special device **LA8D25906** (sold in lots of 10).*
(5) 50 and 125 A fuse carriers type GK1 are fitted with an interlocked neutral tubular link as standard.

Selection : page B4/14 | Characteristics : page B4/15 | Dimensions : page B4/16 | Schemes : page B4/17

Fuse carriers
Accessories

TeSys LS, GK

Accessories for LS1 D32 (screw clamp terminals)

Description	Application	Sold in lots of	Unit reference
Plate for mounting	LS1 D32 and contactor LC1 D09...D38 with front faces aligned	1	**LAD311**
Combination blocks	Between LS1 D32 and contactor LC1 K or LP1 K	10	**GV2AF01**
	Between LS1 D32 and contactor LC1 D09...D38	10	**GV2AF3**
	Between LS1 D32 mounted on LAD 311 and contactor LC1 D09...D38	10	**GV2AF4**

Description	Application	Pitch mm	Reference
Sets of 3-pole 63 A busbars	2 tap-offs	45	**GV2G245**
		54	**GV2G254**
		72	**GV2G272**
	3 tap-offs	45	**GV2G345**
		54	**GV2G354**
	4 tap-offs	45	**GV2G445**
		54	**GV2G454**
		72	**GV2G472**
	5 tap-offs	54	**GV2G554**

Description	Application	Sold in lots of	Unit reference
Protective end cover	For unused busbar outlets	5	**GV1G10**
Terminal block Connection from the top	For supply to one or more GV2 G busbar sets	1	**GV1G09**
Cover for terminal block	For mounting in modular panels	10	**LA9E07**
Padlocking device	For use with up to 4 padlocks (not supplied) Ø6 mm shank max	1	**GV2V03**

Accessories for LS1 D323 (spring terminals)

Description	Application	Reference
Plate for mounting	LS1 D323 and contactor LC1 D09...D38 with front faces aligned	**LAD311**

Description	Extension by	Number of starters	Reference
Power splitter box, 63 A	LAD 32●	2	**LAD322**
		4	**LAD324**

Description	Kit contents	Reference
Assembly and power connection kit for LS1 D323 and LC1 D093...D323	1 LAD 311 plate for mounting LS1 D323 2 LAD 341 power connection modules - between LS1 D323 and power splitter box - between LS1 D323 and contactor	**LAD352**

Description	Maximum capacity	Application	Sold in lots of	Unit reference
Upstream terminal block	16 mm²	Power supply to 1 or 2 power splitter boxes	1	**LAD3B1**
Downstream terminal block	16 mm²	Connection of motor cables	1	**LAD331**
Cable end reducer	–	For connection of conductors from 1 to 1.5 mm²	20	**LAD99**

TeSys DF, LS, GK

Technical Data for Designers

Contents

TeSys DF:
> Characteristics B4/10
> Dimensions and schemes B4/11
TeSys DF for the North American market:
> Characteristics B4/12
> Dimensions and schemes B4/13
TeSys LS and GK:
> Selection B4/14
> Characteristics B4/15
> Dimensions B4/16
> Schemes B4/17

Fuse carriers

TeSys DF

Environment characteristics

Fuse carrier type			DF8	DF10	DF14	DF22
Conforming to standards			IEC 60947-3, UL 512, CSA 22-2 n° 39			
Protective treatment			"TH"			
Degree of protection	Conforming to IEC 60529		IP 20			
Ambient air temperature	Storage	**°C**	-40…+80			
	For operation, with derating (1)	**°C**	-20…+60			
Operating positions			± 23° in relation to normal mounting plane			
Flame resistance	Conforming to IEC 60695-2-1	**°C**	960			

Pole characteristics

Fuse size		**mm**	8.5 x 31.5		10 x 38		14 x 51		22 x 58	
Rated insulation voltage (Ui) with tubular links, a.c. or D.C. supply		**V**	500		690		690		690	
Rated impulse withstand voltage (Uimp)		**kV**	6		6		8		8	
Conventional thermal current (Ith) for ambient air temperature ≤ 40 °C (1)										
	With tubular links	**A**	25		32		50		125	
	With aM cartridge fuses	**A**	25		32		50		125	
	With gG cartridge fuses	**A**	25		32		50		100	
Rated conditional short-circuit current Conforming to IEC 60947-3										
	400 V	**kA**	20		120		120		120	
	500 V	**kA**	–		120		120		120	
	690 V	**kA**	–		–		80		80	
Peak withstand current (dynamic stress) Conforming to IEC 60269-1										
	With tubular links	**kA**	11		15		15		19	
Cabling (number of conductors x c.s.a.)			**Min.**	**Max.**	**Min.**	**Max.**	**Min.**	**Max.**	**Min.**	**Max.**
	Solid cable	**mm²**	1 x 1.5	1 x 16 2 x 6	1 x 1.5	1 x 16 2 x 6	1 x 2.5	1 x 25 2 x 10	1 x 2.5	1 x 35 2 x 25
	Flexible cable without cable end	**mm²**	1 x 1.5	1 x 10 2 x 6	1 x 1.5	1 x 10 2 x 6	1 x 2.5	1 x 25 2 x 10	1 x 2.5	1 x 35 2 x 16
	Flexible cable with cable end	**mm²**	1 x 1.5	1 x 10 2 x 6	1 x 1.5	1 x 10 2 x 6	1 x 2.5	1 x 25 2 x 10	1 x 2.5	1 x 35 2 x 16
Tightening torque		**Nm**	2.2				3.5		4	

Characteristics of early break and signalling contacts DF14 AM and DF22 AM

Rated insulation voltage (Ui) a.c. supply		**V**	250			
Conventional thermal current (Ith) for ambient air temperature ≤ 40 °C (1)		**A**	5			
Rated operational current			**24 V**	**48 V**	**127 V**	**240 V**
	Category AC-15	**A**	4	4	3	2.5
	Category DC-13	**A**	3	1	0.2	0.1
Definition of rated characteristics	Conforming to IEC 60947-5-1		B300			
Low load operating characteristics	Minimum voltage	**V**	10			
	Minimum current	**mA**	30			
Cabling			Faston connectors			

(1) For use in an installation with ambient temperature > 20 °C, apply a derating coefficient:

Maximum temperature	20 °C	30 °C	40 °C	50 °C	60 °C
Max. relative humidity	95 %	90 %	80 %	50 %	50 %
Current derating coefficient	1	0.95	0.9	0.8	0.7

References: pages B4/2 and B4/3 | Substitution: page B4/3 | Dimensions: page B4/11 | Schemes: page B4/11

Fuse carriers

TeSys DF

Dimensions

Modular fuse carriers 25 A and 32 A

Mounting on 35 mm ⊔ rail

DF8 1 and DF8 1V
DF10 1 and DF10 1V
DF10 N

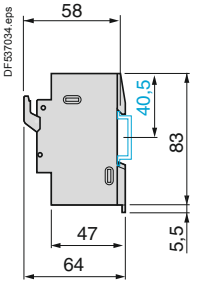

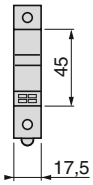

DF8 1N and DF8 1NV
DF8 2 and DF8 2V
DF10 1N and DF10 1NV
DF10 2 and DF10 2V

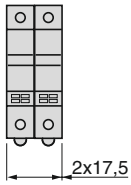

DF8 3 and DF8 3V
DF10 3 and DF10 3V

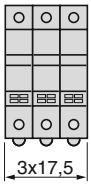

DF8 3N and DF8 3NV
DF10 3N and DF10 3NV

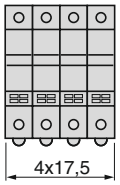

Modular fuse carriers 50 A

Mounting on 35 mm ⊔ rail

DF14 1 and DF14 1V
DF14 N

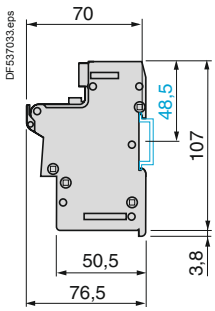

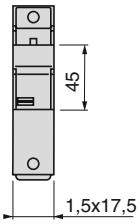

DF14 1N and DF14 1NV
DF14 2 and DF14 2V

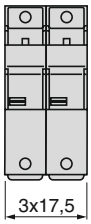

DF14 3C and DF14 3VC

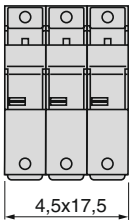

DF14 3NC and DF14 3NVC

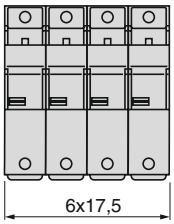

Modular fuse carriers 125 A

Mounting on 35 mm ⊔ rail

DF22 1 and DF22 1V
DF22 N

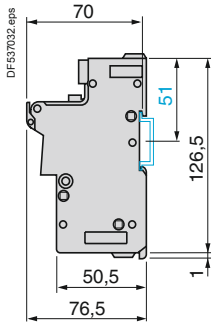

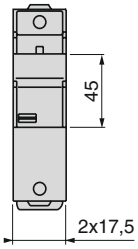

DF22 1N and DF22 1NV
DF22 2 and DF22 2V

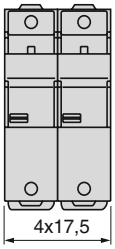

DF22 3C and DF22 3VC

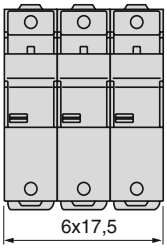

DF22 3NC and DF22 3NVC

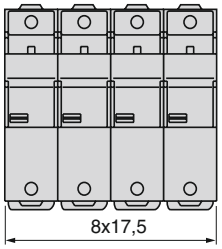

Schemes

Modular fuse carriers

DF● 1P

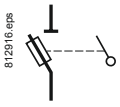

DF● N

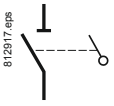

DF● 1P + N

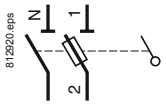

DF● 2P

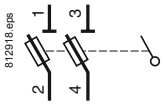

DF● 3P

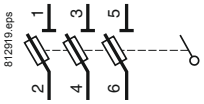

DF● 3P + N

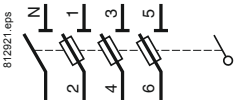

References:
pages B4/2 and B4/3

Substitution:
page B4/3

Characteristics:
page B4/10

Fuse carriers for the North American market

TeSys DF

Environment characteristics

Fuse carrier type			DFCC
Conforming to standards			IEC 60947-3, UL 512, CSA 22-2 n° 39
Protective treatment			"TH"
Degree of protection	Conforming to IEC 60529		IP 20
Ambient air temperature	Storage	**°C**	-40…+80
	For operation, with derating (1)	**°C**	-20…+60
Operating positions	Without derating		±23° in relation to normal vertical mounting plane
Flame resistance	Conforming to IEC 60695-2-1	**°C**	960

Pole characteristics

Fuse carrier type			DFCC	
Fuse size			Class CC	
Rated insulation voltage (Ui) with tubular links, a.c. supply		**V**	600	
Rated impulse withstand voltage (Uimp)		**kV**	6	
Conventional thermal current (Ith) for ambient air temperature ≤ 40 °C (1)				
	With tubular links	**A**	30	
	With aM cartridge fuses	**A**	30	
	With gG cartridge fuses	**A**	30	
Short-circuit current withstand With UL 248-4 Class CC fuses				
	Conforming to UL 512 at 600 V	**kA**	200	
Cabling (number of conductors x c.s.a.)			**Min.**	**Max.**
	Solid cable	**mm²**	1 x 1.5	1 x 16 2 x 6
	Flexible cable without cable end	**mm²**	1 x 1.5	1 x 10 2 x 6
	Flexible cable with cable end	**mm²**	1 x 1.5	1 x 10 2 x 6
Tightening torque		**Nm**	2.2	

(1) For use in an installation with ambient temperature > 20 °C, apply a derating coefficient:

Maximum temperature	20 °C	30 °C	40 °C	50 °C	60 °C
Max. relative humidity	95 %	90 %	80 %	50 %	50 %
Current derating coefficient	1	0.95	0.9	0.8	0.7

References: page B4/4
Dimensions: page B4/13
Schemes: page B4/13

Fuse carriers for the North American market

Dimensions

Modular fuse carriers 30 A

Mounting on 35 mm ⊔ rail

DFCC 1 and DFCC 1V

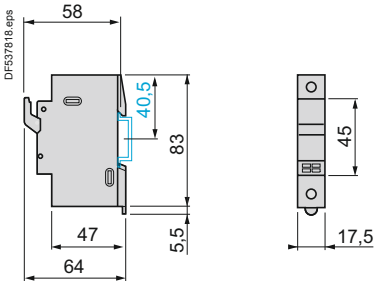

DFCC 2 and DFCC 2V

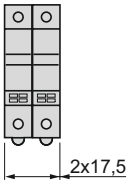

DFCC 3 and DFCC 3V

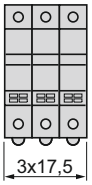

Schemes

Modular fuse carriers

DFCC 1P

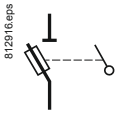

DFCC 2P

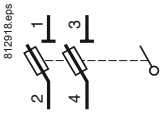

DFCC 3P

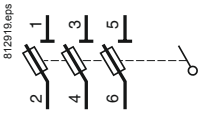

Fuse carriers

TeSys LS, GK

Operation: safety

The fuse carrier performs two basic functions:
- it isolates the downstream circuit by means of a visible break and wide opening contacts,
- it holds the cartridge fuses designed to protect the installation against short-circuits.

The type of cartridge fuse needed to protect the circuit must be determined before selecting the fuse carrier.

Cartridge fuse selection (type, rating, size)

Type

Application	■ Motor protection. ■ Transformer protection.
Solution	■ **aM type** fuses. These fuses are designed to withstand high current peaks of a very short duration. They must be combined with a thermal overload relay coupled with a contactor.
Application	■ Lighting circuit protection. ■ Supply line protection. ■ Furnace protection.
Solution	■ **gG** type fuses, which are more widely used but whose limiting capacity is weaker than that of **aM** type fuses.

Rating

gG fuses
aM fuses

See standard NF C 15-100.
Table 53 A paragraph 532-2-1 and table 52 C paragraph 523-1.

Motors 3 x 220 V		Motors 3 x 400 V		Cartridge fuses type aM		Fuse carrier
P	in	P	in	Size	Rating	
kW	A	kW	A		A	
9	32	15	28.5	10 x 38	32	**LS1 D32**
11	39	22	44	14 x 51	50	**GK1 EK**
22	75	37	73	22 x 58	80	**GK1 FK**
30	103	55	105	22 x 58	125	**GK1 FK**

Size

Use the “fuse characteristics” table opposite to select the correct fuse size according to:
- the nominal current of the circuit to be protected,
- the operational voltage.

Fuse carrier selection

Application	**Isolation** of a circuit for safety reasons only.
Solution	The fuse carrier may be fitted with links. The maximum permissible current is indicated in the “pole characteristics” table opposite.
Application	**Isolation** of a circuit and its **protection** against short-circuits.
Solution	Select a fuse carrier according to: ■ the type of cartridge fuse required, ■ the maximum permissible current in the fuse carrier poles (see “pole characteristics” table opposite). If the operational current is greater than the maximum permissible current in the poles of the fuse carrier corresponding to the cartridge fuse size selected, select the fuse carrier the next size up. The **safety** provided by using a fuse carrier can be increased by adding a padlocking device with up to three padlocks.

Recommendations for use

The fuse carrier conforms to utilisation category AC-21A/22A of standard IEC 60947-3. It is therefore recommended that the fuse carrier early break auxiliary contacts always be inserted in the coil circuit of the contactor with which it is in series. If the fuse carrier is not associated with a contactor, it is essential to ensure that it will be operated off-load.

References: pages B4/5 to B4/7 | Characteristics: page B4/15 | Dimensions: page B4/16 | Schemes: page B4/17

Fuse carriers

TeSys LS, GK

Environment						
Fuse carrier type			**LS1 D32**	**LS1 D323**	**GK1 E●**	**GK1 F●**
Conforming to standards	NF EN 60947-3		●		●	●
	IEC 60947-3		●		●	●
Product certifications			BV, UR		–	–
Protective treatment			"TH"		"TC"	"TC"
Ambient air temperature for operation with links without derating		**°C**	-50…+70		-50…+70	-50…+70
Maximum tilt in relation to normal vertical mounting plane			±23°		±23°	±23°
Pole characteristics						
Fuse size			10 x 38	10 x 38	14 x 51	22 x 58
Rated operational voltage with links. a.c. supply		**V**	690	690	690	690
Maximum continuous current at ambient temperature ≤ 40 °C (1) (Min. cable Ø/Ie)						
	With tubular links	**mm²/A**	6/32 or 4/25 or 2.5/16	4/25 or 2.5/16	10/50 or 6/40	35/125 or 25/100
	With **aM** fuses	**mm²/A**	6/32 or 4/22 or 2.5/20	4/25 or 2.5/20	10/50 or 6/35	35/125 or 25/100
	With **gG** fuses	**mm²/A**	4/25 or 2.5/20 or 1.5/16	2.5/20 or 1.5/16	10/40 or 6/32	25/100 or 16/80
Early break contact characteristics						
Rated operational voltage		**V**	∿ 250. ⎓ 60	∿ 250. ⎓ 60	∿ 500. ⎓ 440	∿ 500. ⎓ 220
Conventional thermal current		**A**	2.5	2.5	6	6
Cartridge fuse characteristics						
Fuse size			10 x 38	10 x 38	14 x 51	22 x 58
Type **aM**	∿ 400 V	**A**	32 (2)	25	50	125
	∿ 500 V	**A**	20	20	40	80
	∿ 660 V	**A**	–	–	25	50
Type **gG**	∿ 400 V	**A**	25 (2)	25	40	100
	∿ 500 V	**A**	25	25	40	80
	∿ 660 V	**A**	–	–	25	50
Maximum power dissipated by fuse		**W**	3	3	8.5	18

Cabling										
Connection by screw clamp terminals or connectors										
Number and c.s.a. of conductors			**Min.**	**Max.**	**Min.**	**Max.**	**Min.**	**Max.**	**Min.**	**Max.**
	Solid cable	**mm²**	2 x 1	2 x 6	–	–	1 x 2.5	1 x 25	1 x 16	1 x 70
	Flexible cable without cable end	**mm²**	2 x 1.5	2 x 6	–	–	1 x 2.5	1 x 25	1 x 16	1 x 50
	Flexible cable with cable end	**mm²**	2 x 1	2 x 4	–	–	1 x 2.5	1 x 16	1 x 16	1 x 25
Connection			Screw clamp terminals		–	–	Connector		Connector	
Tightening torque		**Nm**	1.7		–	–	2		2	
Connection by spring terminals										
Number and c.s.a. of conductors			**Min.**	**Max.**	**Min.**	**Max.**	**Min.**	**Max.**	**Min.**	**Max.**
	Solid cable	**mm²**	–	–	2 x 1 (3)	2 x 4	–	–	–	–
	Flexible cable without cable end	**mm²**	–	–	2 x 1.5 (1)	2 x 4	–	–	–	–

(1) For use in an installation with ambient temperature > 55 °C, apply a derating coefficient equivalent to $\sqrt{\frac{120 - \text{ambient temperature}}{80}}$

*(2) These values are for fuse carriers mounted side by side with a gap of 10 mm between them or mounted with sets of busbars **GV2 ●54**. If mounted side by side without a gap, use the following fuse sizes: **aM** fuse: 25 A and **gG** fuse: 20 A.*

*(3) For cross-sections 1 to 1.5 mm², the use of an **LA9 D99** cable end reducer is recommended.*

References: pages B4/5 to B4/7 | Selection: page B4/14 | Dimensions: page B4/16 | Schemes: page B4/17

Fuse carriers

TeSys LS, GK

LS1 D32

Mounting on rail AM1 DP200

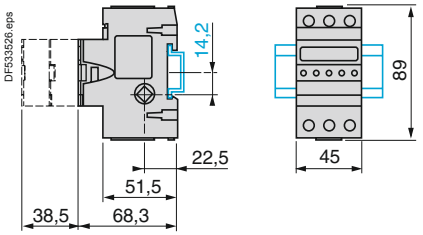

Panel mounting

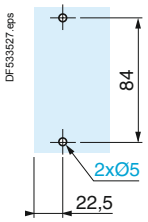

LS1 D32 + LA8 D324

Mounting on rail AM1 DP200

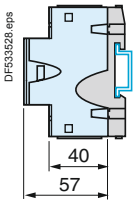

Mounting of 4th pole

On left-hand side

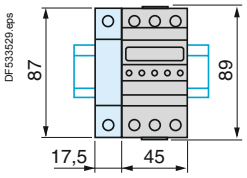

On right-hand side

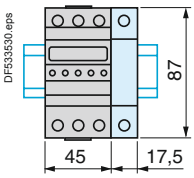

GK1 EK, EM, ES, ET, EV, EW, EX, EY

Mounting on rail AM1 DP200

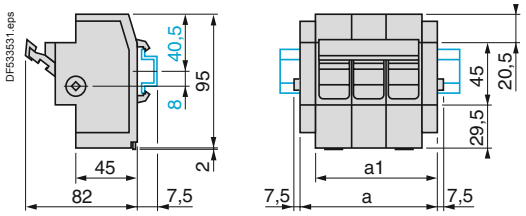

Mounting on pre-slotted plate AM 1P

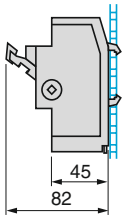

a: with single-phase protection device.
a1: without single-phase protection device.

GK1	a		a1	
	3 P	4 P	3 P	4 P
EK	–	–	88	–
EM	–	–	–	114
ES	–	–	97	–
ET	–	–	–	123
EV	106	–	–	–
EW	115	–	–	–
EX	–	141	–	–
EY	–	132	–	–

GK1 E + GK1 AV (padlocking device)

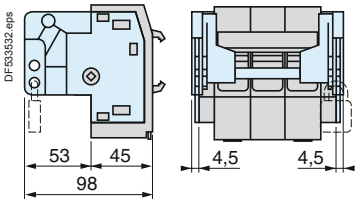

External operator GK1 AP05 right-hand, GK1 AP06 left-hand

Panel cut-out

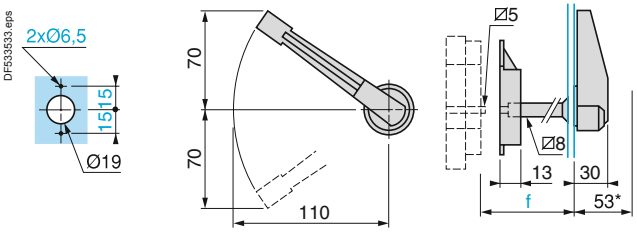

External operator, RH or LH side	f
GK1 EK, EM, ES, ET	29…114
GK1 EV, EW, EX, EY	29…114

GK1 F● + GK1 AP07 (internal right-hand control)

Mounting on rail AM1 DE or ED

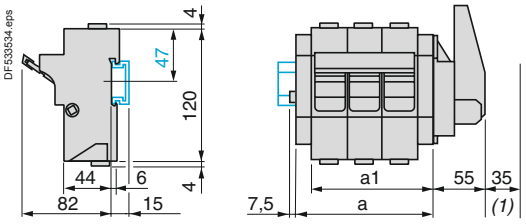

(1) Padlocking device (up to 3 padlocks)

Mounting on pre-slotted plate AM1PA

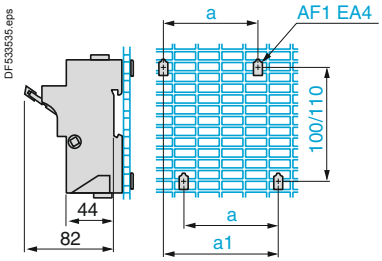

GK1	a		a1	
	3 P	4 P	3 P	4 P
F●	70	105	96	131

GK1	a		a1	
	3 P	4 P	3 P	4 P
FK	–	–	121	–
FM	–	–	–	156
FS	–	–	136	–
FT	–	–	–	171
FV	136	–	–	–
FW	151	–	–	–
FX	–	186	–	–
FY	–	171	–	–

Internal or external control GK1 AP07 RH, AP08LH

Panel cut-out (for external control)

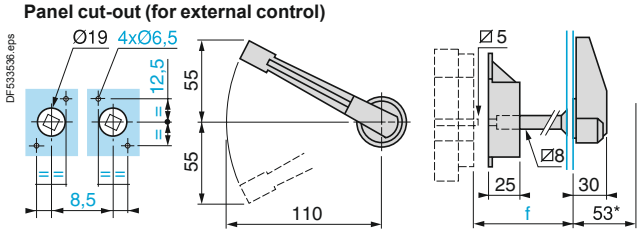

External operator, RH or LH side	f
GK1 FK, FM, FS, FT	35…114
GK1 FV, FW, FX, FY	35…114

References: pages B4/5 to B4/7
Selection: page B4/14
Characteristics: page B4/15
Schemes: page B4/17

Fuse carriers

TeSys LS, GK

Fuse carriers without single-phase protection device

3-pole

LS1 D32, D323

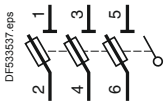

LS1 D32, D323 + GV AE11●

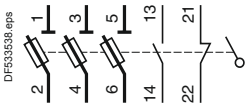

LS1 D32, D323 + GV AE20●

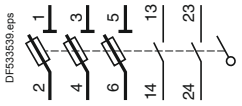

GK1 EK

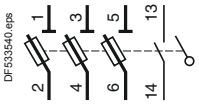

GK1 ES

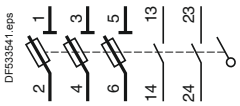

GK1 FK

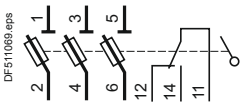

GK1 FS

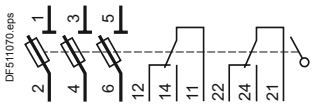

4-pole

LS1 D32 + LA8 D324

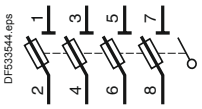

3-pole + Neutral

GK1 EM

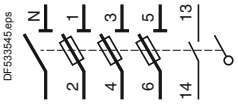

GK1 ET

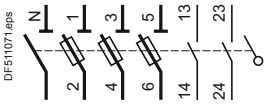

GK1 FM

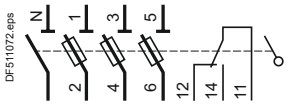

GK1 FT

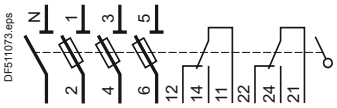

Fuse carriers with single-phase protection device

3-pole

GK1 EV

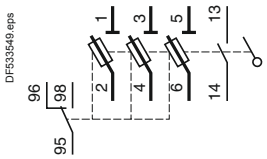

GK1 EW

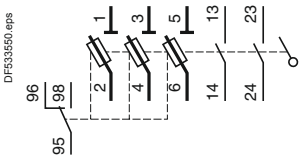

GK1 FV

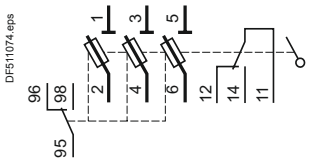

GK1 FW

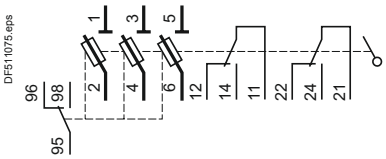

3-pole + Neutral

GK1 EY

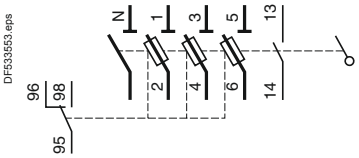

GK1 EX

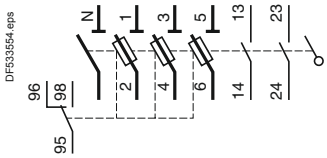

GK1 FY

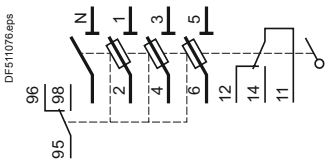

GK1 FX

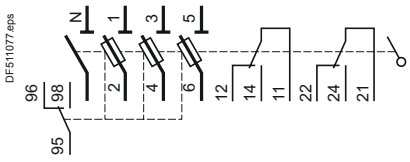

Switch-disconnector fuses
TeSys GS

Presentation	B5/2

Switch-disconnector fuses - TeSys GS

Type of product	Range		Pages
IEC - Switch-disconnector fuses For NFC / DIN fuses	From **32** to **1250** A		B5/4
IEC - Switch-disconnector fuses For BS fuses	From **32** to **1250** A		B5/6
UL - Switch-disconnector fuses For CC / J fuses	From **30** to **800** A		B5/8
NFC - Cartridge fuses Type aM, gG	From **0.16** to **125** A		B5/10
DIN - Cartridge fuses Type aM, gG	From **10** to **1250** A	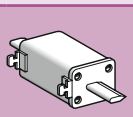	B5/11
Auxiliary contacts for IEC and UL switch-disconnector fuses	From **32** to **1250** A	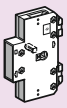	B5/12
Handles	From **32** to **1250** A		B5/13
Other accessories	From **32** to **1250** A		B5/14

Technical Data for Designers B5/15

Switch-disconnector fuses and accessories

Discover the components

TeSys GS

A customizable functional block

Whatever its rating, the switch-disconnector fuse fits the need: particular position of the handle, triggering of an automatic control before full opening, enhanced protection of terminals...

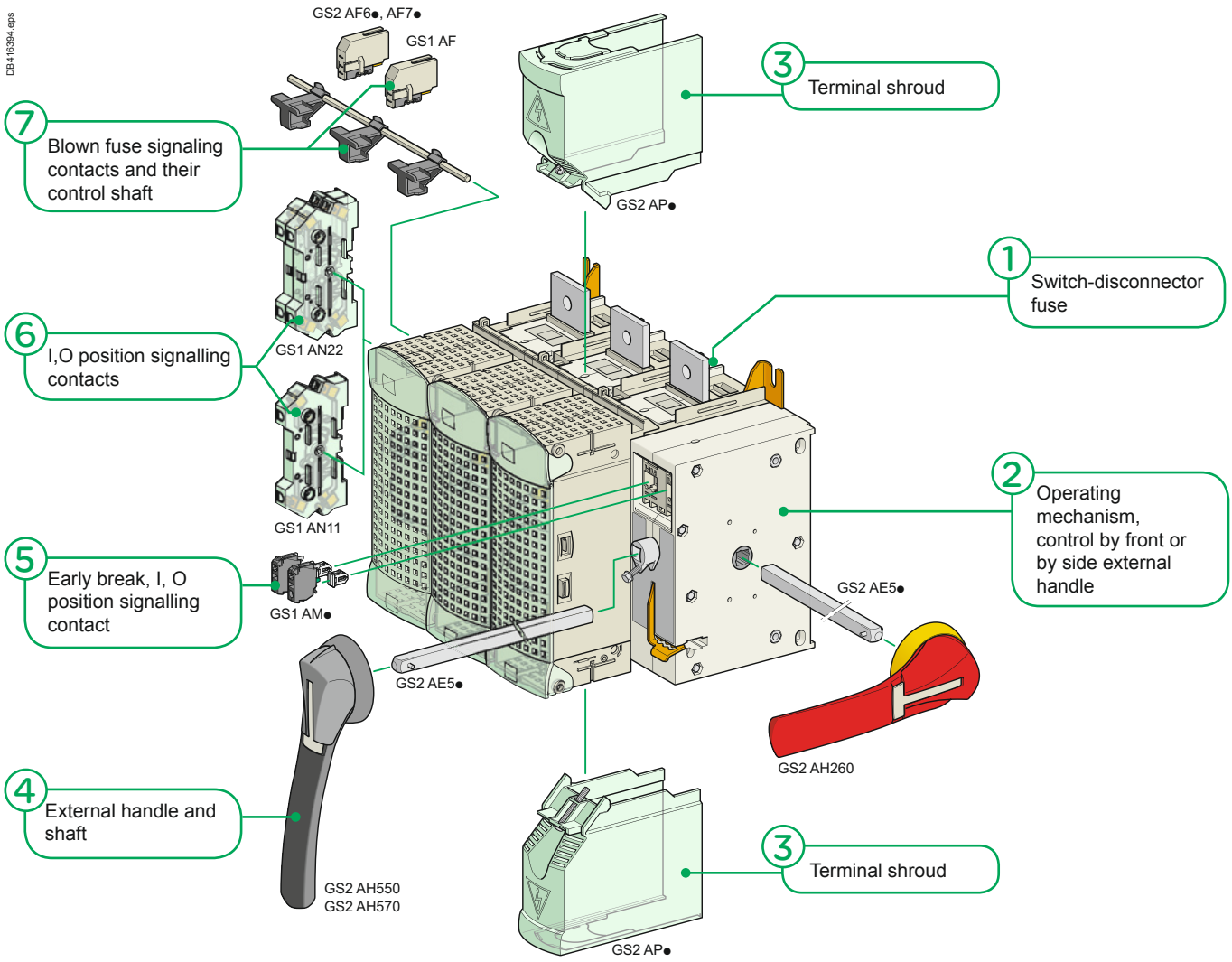

Customizable

GS2 630 A switch-disconnector fuse

1 Switch-disconnector fuse
- NFC/DIN or BS fuse compatible
- Enhanced isolation between poles
- On-load making/breaking with double break isolation of the power circuit

2 Operating mechanism
- For one front or side external handle, right or left side
- Cavity for early-break contacts

3 Terminal shrouds
- For use when the switch-disconnector fuse is installed outside an enclosure or when the operating voltage is over 500 V AC

4 Operating handle
- Padlockable in open position

5 GS1AN●● Position signalling contacts
- Synchronized with the poles operation

6 GS1AM●●● Early-break signalling contacts
- Activated before the poles are opened

7 GS1AF●● Blown fuse signalling contacts
- A missing fuse is also indicated

Switch-disconnector fuses and accessories

Discover the operating by direct and remote external handles

Simplicity of the direct operating

The mounting of an operating handle directly on the side of the switch-disconnector fuse is a simple operation.
This handle will be for use by qualified personnel only.
As the mechanical design is simplified, the manoeuvre will be immediately understood by the operator.
Each handle can be padlocked in open position. Locking device for 3 padlocks.

DB416395.eps

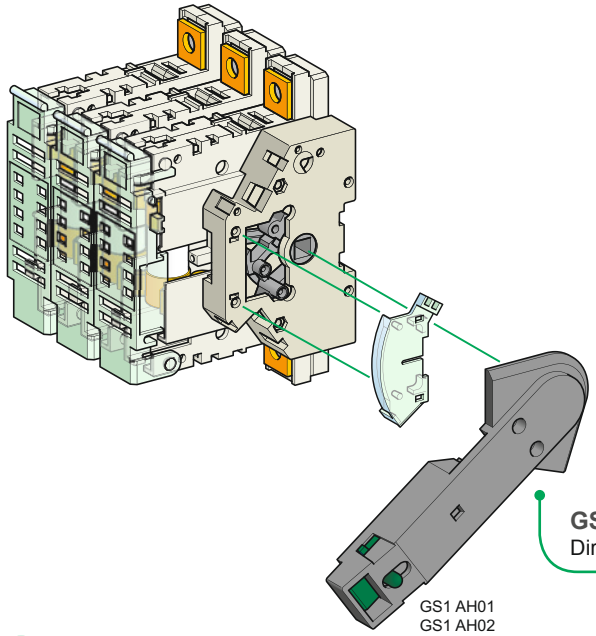

GS1 AH01
GS1 AH02

GS1JD3 - 100 A switch-disconnector fuse
Direct lateral operating

DB416396.eps

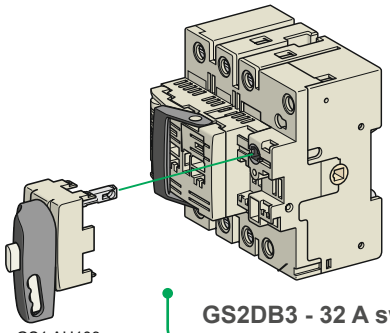

GS1 AH103

GS2DB3 - 32 A switch-disconnector fuse
Direct front operating

Position of the handle, a free choice

Performance remote operating

Located on the front or side panel of an enclosure, the operating handle provide complementary features:
- simple (IP55) or reinforced (IP65) protection against dust
- intermediate "Test" position
- door interlock when the handle is in "Close" position, opening by mean of a special tool is needed for opening.
- optional key-operated handle lock

The handles are available in different lengths. They are chosen according the operating effort which depends on the rating of the switch-disconnector fuse.
The drive shaft can be cut to the ideal length.
The choice of a red and yellow handle (CNOMO standard) will identify an "Emergency Stop handle" among others handles, generally black and gray.

DB416397.eps

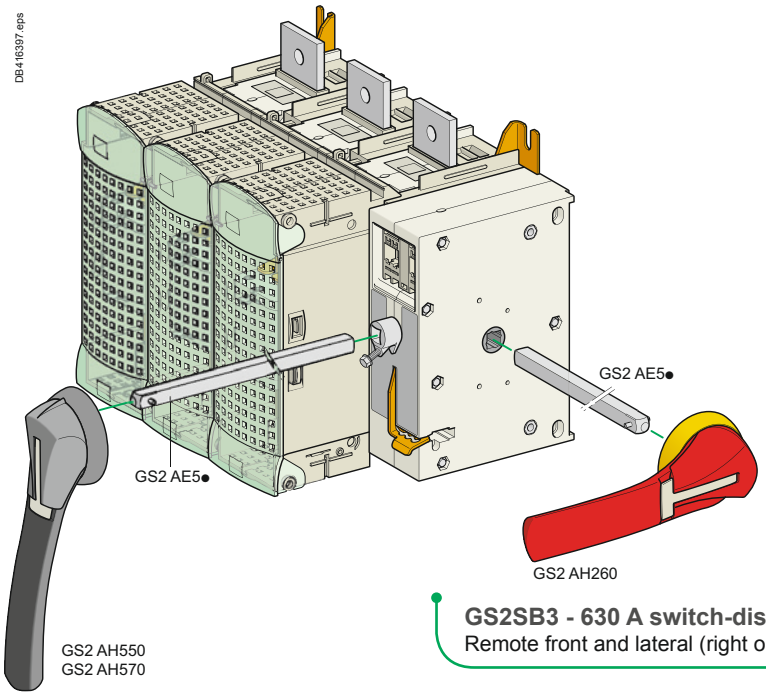

GS2 AH260

GS2 AH550
GS2 AH570

GS2SB3 - 630 A switch-disconnector fuse
Remote front and lateral (right only) operating

IEC Switch-disconnector fuses - TeSys GS

For NFC / DIN fuses





Rating	A	32		50		63		100		125	
Number of poles		3	3+N	3	4	3	4	3	4	3	4
Fuse size		10 x 38		14 x 51		Size 000		22 x 58		22 x 58	
For direct operators											
Switch-disconnector fuses reference		**GS1DD3**	**GS1DD4**	**GS1FD3**	**GS1FD4**	**GS1GD3**	**GS1GD4**	**GS1JD3**	**GS1JD4**	**GS1KD3**	**GS1KD4**
Handle	Black	**GS1AH103**		**GS1AH01**				**GS1AH02**			
Auxiliary contacts	O/I + Test 1NO + 1NC	-		**GS1AN11**							
	O/I + Test 2NO + 2NC	-		**GS1AN22**							
	O/I + early break	**GS1AM111** (1 OF)		**GS1AM1** (1 OF)							
		GS1AM211 (2 OF)		**GS1AM2** (2 OF)							
	Blown fuse	-		**GS1AF1**		-		**GS1AF23**	**GS1AF24**	**GS1AF23**	**GS1AF24**
For external left hand side-mounted operators											
Switch-disconnector fuses reference		**GS1DD3**	**GS1DD4**	**GS2FG3**	**GS2FG4**	**GS2GG3**	**GS2GG4**	**GS2JG3**	**GS2JG4**	**GS2KG3**	**GS2KG4**
Handle	Black/Grey IP65	**GS2AH310**						**GS2AH330**			
	Red/Yellow IP65	**GS2AH320**						**GS2AH340**			
Auxiliary contacts	O/I + Test 1NO + 1NC	-		**GS1AN11G**							
	O/I + Test 2NO + 2NC	-		**GS1AN22G**							
	O/I + early break 1NO	**GS1AM110**									
	O/I + early break 2NO	**GS1AM101**									
	Blown fuse	-		**GS1AF1**		-		**GS1AF23**	**GS1AF24**	**GS1AF23**	**GS1AF24**
For external front-mounted and right-hand side-mounted operators											
Switch-disconnector fuses reference		**GS1DD3**	**GS1DD4**	**GS2F3**	**GS2F4**	**GS2G3**	**GS2G4**	**GS2J3**	**GS2J4**	**GS2K3**	**GS2K4**
Front-mounted handle	Black/Grey IP55	**GS2AH515**						**GS2AH535**			
	Black/Grey IP65	**GS2AH510**						**GS2AH530**			
	Red/Yellow IP65	**GS2AH520**						**GS2AH540**			
Front-mounted handle + Test position	Black/Grey IP65	**GS2AHT510**						**GS2AHT530**			
	Red/Yellow IP65	**GS2AHT520**						**GS2AHT540**			
RH side-mounted handle	Black/Grey IP55	**GS2AH215**						**GS2AH235**			
	Black/Grey IP65	**GS2AH210**						**GS2AH230**			
	Red/Yellow IP65	**GS2AH220**						**GS2AH240**			
Auxiliary contacts	O/I + Test 1NO + 1NC	-		**GS1AN11**							
	O/I + Test 2NO + 2NC	-		**GS1AN22**							
	O/I + Test 1NO + 1NC + test	-		**GS1ANT11**							
	O/I + Test 2NO + 2NC + test	-		**GS1ANT22**							
	O/I + Test + early break 1NO	-		**GS1AM110**							
	O/I + Test + early break 1NC	-		**GS1AM101**							
	Blown fuse	-		**GS1AF1**		-		**GS1AF23**	**GS1AF24**	**GS1AF23**	**GS1AF24**
Accessories											
Shaft for external handle (mm)	200	**GS2AE82**		**GS2AE22**							
	320	**GS2AE8**		**GS2AE2**							
	400	**GS2AE81**		**GS2AE21**							
Terminal shroud		Integrated						**GS1AP33** (3P), **GS1AP34** (4P)			
Dimensions											
	Direct front-mounted version	page B5/23		page B5/24							
	External front-mounted version	page B5/23		page B5/25							

Handles



GS1 AH01



GS1 AH02



GS2 AH●10
GS2 AH●20



GS2 AH●30
GS2 AH●40



GS2 AH●50
GS2 AH●60

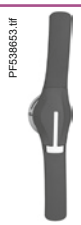

GS2 AH●70
GS2 AH●80

See details on handles page B5/13.





125		160				250		400		630		1250	
3	4	3	4	3	4	3	4	3	4	3	4	3	4
Size 00		Size 00		Size 0		Size 1		Size 2		Size 3		Size 4	
GS1KKD3	**GS1KKD4**	**GS1LLD3**	**GS1LLD4**	**GS1LD3**	**GS1LD4**	**GS1ND3**	**GS1ND4**	**GS1QQD3**	**GS1QQD4**	**GS2S3**	**GS2S4**	**GS2V3**	**GS2V4**
GS1AH02										**GS2AH104**		**GS2AH105**	
GS1AN11													
GS1AN22													
GS1AM1 (1 OF)										**GS1AM110** (1 NO)			
GS1AM2 (2 OF)										**GS1AM101** (1 NC)			
-				**GS1AF33**	**GS1AF34**	**GS1AF43**	**GS1AF44**	**GS1AF43**	**GS1AF44**	**GS2AF63**	**GS2AF64**	**GS2AF73**	**GS2AF74**
GS2KKG3	**GS2KKG4**	**GS2LLG3**	**GS2LLG4**	**GS2LG3**	**GS2LG4**	**GS2NG3**	**GS2NG4**	**GS2QQG3**	**GS2QQG4**	**GS2SG3**	**GS2SG4**	**GS2VG3**	**GS2VG4**
GS2AH330										**GS2AH350**			
GS2AH340										**GS2AH360**			
GS1AN11G													
GS1AN22G													
GS1AM110													
GS1AM101													
-				**GS1AF33**	**GS1AF34**	**GS1AF43**	**GS1AF44**	**GS1AF43**	**GS1AF44**	**GS2AF63**	**GS2AF64**	**GS2AF73**	**GS2AF74**
GS2KK3	**GS2KK4**	**GS2LL3**	**GS2LL4**	**GS2L3**	**GS2L4**	**GS2N3**	**GS2N4**	**GS2QQ3**	**GS2QQ4**	**GS2S3**	**GS2S4**	**GS2V3**	**GS2V4**
GS2AH535										-			
GS2AH530										**GS2AH550**		**GS2AH570**	
GS2AH540										**GS2AH560**		**GS2AH580**	
GS2AHT530										-			
GS2AHT540										-			
GS2AH235										-			
GS2AH230										**GS2AH250**			
GS2AH240										**GS2AH260**			
GS1AN11													
GS1AN22													
GS1ANT11										-			
GS1ANT22										-			
GS1AM110										-			
GS1AM101										-			
-				**GS1AF33**	**GS1AF34**	**GS1AF43**	**GS1AF44**	**GS1AF43**	**GS1AF44**	**GS2AF63**	**GS2AF64**	**GS2AF73**	**GS2AF74**
GS2AE22										**GS2AE52**			
GS2AE2										**GS2AE5**			
GS2AE21										**GS2AE51**			
GS1AP33 (3P), **GS1AP34** (4P)						**GS1AP43** (3P), **GS1AP44** (4P)				**GS2AP73**	**GS2AP64**	**GS2AP83**	**GS2AP84**
page B5/24										page B5/26			
page B5/25										page B5/27			

Auxiliary contacts

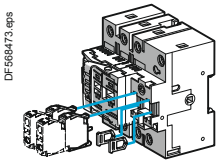

GS1 AM1●●

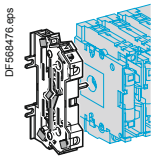

GS1 AN●●●

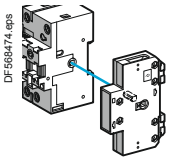

GS1 AM●11

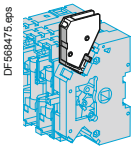

GS1 AM●

See details on auxiliary contacts, page B5/12.

Maximal number of auxiliary contacts

Switch rating (A)	Standard configuration	With additional bracket	Reference of additional bracket
32	4	4	**GS1AD10**
50...400	4	4	**GS2AD20**
200...400	8	8	**GS2AD20**
630...1250	8	-	-

IEC Switch-disconnector fuses - TeSys GS

For BS fuses





Number of poles			3	3+N	3	4	3	4	3	4	3	4	3	4		
Fuse size			A1		A1		A2-A3		A4		A4		B1-B2			
For direct operators																
Switch-disconnector fuses reference			**GS1DDB3**	**GS1DDB4**	-											
Handle	Black		**GS1AH103**		-											
Auxiliary contacts	O/I + Test	1NO + 1NC	-		-											
		2NO + 2NC	-		-											
	O/I + early break		**GS1AM111** (1 OF)		-											
			GS1AM211 (2 OF)		-											
For external front-mounted and right-hand side-mounted operators																
Switch-disconnector fuses reference			**GS1DDB3**	**GS1DDB4**	**GS2DB3**	**GS2DB4**	**GS2GB3**	**GS2GB4**	**GS2JB3**	**GS2JB4**	**GS2LLB3**	**GS2LLB4**	**GS2LB3**	**GS2LB4**		
Front-mounted handle	Black/Grey	IP55	**GS2AH515**						**GS2AH535**							
	Black/Grey	IP65	**GS2AH510**						**GS2AH530**							
	Red/Yellow	IP65	**GS2AH520**						**GS2AH540**							
Front-mounted handle + Test position	Black/Grey	IP65	**GS2AHT510**						**GS2AHT530**							
	Red/Yellow	IP65	**GS2AHT520**						**GS2AHT540**							
RH side-mounted handle	Black/Grey	IP55	**GS2AH215**						**GS2AH235**							
	Black/Grey	IP65	**GS2AH210**						**GS2AH230**							
	Red/Yellow	IP65	**GS2AH220**						**GS2AH240**							
Auxiliary contacts	O/I + Test	1NO + 1NC	-		**GS1AN11**											
		2NO + 2NC	-		**GS1AN22**											
		1NO + 1NC + test	-		**GS1ANT11**											
		2NO + 2NC + test	-		**GS1ANT22**											
	O/I + Test + early break	1NO	**GS1AM110** - max 4 contacts													
		1NC	**GS1AM101** - max 4 contacts													
Accessories																
Shaft for external handle (mm)		200	**GS2AE82**		**GS2AE22**											
		320	**GS2AE8**		**GS2AE2**											
		400	**GS2AE81**		**GS2AE21**											
Terminal shroud			Integrated						**GS1AP33** (3P), **GS1AP34** (4P)							
Dimensions																
	Direct front-mounted version		page B5/23				page B5/24									
	External front-mounted version		page B5/23				page B5/25									

	3	4	3	4	3	4	3	4	3	4	3	4	3	4				
	B1-B2		B1...B3		B1...B3		B1...B4		C1-C2		C1...C3		D1					
	-								-				-					
	-								-				-					
	-								-									
	-								-									
	-								-									
	-								-									
	GS2MMB3	**GS2MMB4**	**GS2NB3**	**GS2NB4**	**GS2PPB3**	**GS2PPB4**	**GS2QQB3**	**GS2QQB4**	**GS2SB3**	**GS2SB4**	**GS2TB3**	**GS2TB4**	**GS2VB3**	**GS2VB4**				
	GS2AH535								-									
	GS2AH530								**GS2AH550**				**GS2AH570**					
	GS2AH540								**GS2AH560**				**GS2AH580**					
	GS2AHT530								-									
	GS2AHT540								-									
	GS2AH235								-									
	GS2AH230								**GS2AH250**									
	GS2AH240								**GS2AH260**									
	GS1AN11																	
	GS1AN22																	
	GS1ANT11								-									
	GS1ANT22								-									
	GS1AM110 - max 8 contacts																	
	GS1AM101 - max 8 contacts																	
	GS2AE22								**GS2AE52**									
	GS2AE2								**GS2AE5**									
	GS2AE21								**GS2AE51**									
	GS1AP43 (3P), **GS1AP44** (4P)								**GS2AP73** (3P), **GS2AP64** (4P)				**GS2AP83**	**GS2AP84**				
	page B5/24								page B5/26									
	page B5/25								page B5/27									

UL Switch-disconnector fuses - TeSys GS

For CC and J fuses





Rating			30 Compact		30		60	100	
Number of poles			3		3		3	3	
Fuse size			CC	J	CC	J	J	J	
For direct operators									
Switch-disconnector fuses reference			**GS1DDU3**	**GS1DU3**	-				
Handle	Black		**GS1AH106**		-				
Auxiliary contacts	O/I + Test	1NO + 1NC	-						
		2NO + 2NC	-						
	O/I + early break	1NO	**GS1AM110 + GS1AD10**		-				
		1NC	**GS1AM101 + GS1AD10**		-				
For external front-mounted operators									
Switch-disconnector fuses reference			**GS1DDU3**	**GS1DU3**	**GS2EEU3**	**GS2EU3N**	**GS2GU3N**	**GS2JU3N**	
Front-mounted handle	Black/Grey	1,3R, 12	**GS2AH110**		**GS2AH130**				
		4, 4X	**GS2AH410**		**GS2AH430**				
	Red/Yellow	1,3R, 12	**GS2AH120**		**GS2AH140**				
		4, 4X	**GS2AH420**		**GS2AH440**				
Front-mounted handle + Test position	Black/Grey	1,3R, 12	**GS2AHT110**		**GS2AHT130**				
		4, 4X	**GS2AHT410**		**GS2AHT430**				
	Red/Yellow	1,3R, 12	**GS2AHT120**		**GS2AHT140**				
		4, 4X	**GS2AHT420**		**GS2AHT440**				
Auxiliary contacts	O/I + Test	1NO + 1NC	-		**GS1AN11**				
		2NO + 2NC	-		**GS1AN22**				
		1NO + 1NC + test	-		**GS1ANT11**				
		2NO + 2NC + test	-		**GS1ANT22**				
	O/I + Test + early break	1NO	**GS1AM110** - max 4 contacts (1)		**GS1AM110** - max 4 contacts (1)				
		1NC	**GS1AM101** - max 4 contacts (1)		**GS1AM101** - max 4 contacts (1)				
Accessories									
Shaft for external handle (mm)		320	**GS2AE8**		**GS2AE2**				
		400	**GS2AE81**		**GS2AE21**				
Terminal shroud			Integrated						
Dimensions									
	Direct front-mounted version		page B5/23				page B5/24		
	External front-mounted version		page B5/23				page B5/25		

(1) 4 more contacts allowed with GS1AD10 additional bracket.

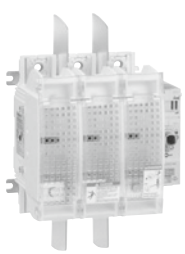
PB112397_NB.eps

	200	400	600	800
	3	3	3	3
	J	J	J	J
	-		-	-
	-		-	
	-		-	
	-		-	
	-		-	
	GS2MU3N	**GS2QU3N**	**GS2SU3**	**GS2TU3**
	GS2AH130		-	
	GS2AH430		**GS2AH150**	
	GS2AH140		-	
	GS2AH440		**GS2AH160**	
	GS2AHT130		-	
	GS2AHT430		-	
	GS2AHT140		-	
	GS2AHT440		-	
	GS1AN11			
	GS1AN22			
	GS1ANT11		-	
	GS1ANT22		-	
	GS1AM110 - max 8 contacts (1)		**GS1AM110** - max 8 contacts only	
	GS1AM101 - max 8 contacts (1)		**GS1AM101** - max 8 contacts only	
	GS2AE2		**GS2AE5**	
	GS2AE21		**GS2AE51**	
	GS1AP43	**GS1AP53**	**GS2AP73**	
	page B5/24		page B5/26	
	page B5/25		page B5/27	

NFC Cartridge fuses
Fuse type aM, type gG

From 32 to 1250 A

TeSys GS



DF2 CA●●●
DF2 CN●●

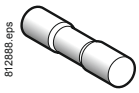

DF2 EA●●●
DF2 EN●●

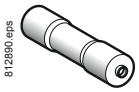

DF3 EA●●
DF3 EN●●

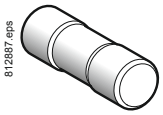

DF2 FA●●
DF2 FN●●



DF3 FA●●
DF3 FN●●

NFC fuse

Fuse type	Maximum rated voltage	Rating	Sold in lots of	Fuses without striker – Unit reference		Fuses with striker – Unit reference	
	V ∼	A		aM	gG	aM	gG
Cylindrical 8.5 x 31.5	400	1	10	**DF2BA0100**	**DF2BN0100**	–	–
		2	10	**DF2BA0200**	**DF2BN0200**	–	–
		4	10	**DF2BA0400**	**DF2BN0400**	–	–
		6	10	**DF2BA0600**	**DF2BN0600**	–	–
		8	10	**DF2BA0800**	**DF2BN0800**	–	–
		10	10	**DF2BA1000**	**DF2BN1000**	–	–
		12	10	–	**DF2BN1200**	–	–
		16	10	–	**DF2BN1600**	–	–
		20	10	–	**DF2BN2000**	–	–
Cylindrical 10 x 38	500	0.16	10	**DF2CA001**	–	–	–
		0.25	10	**DF2CA002**	–	–	–
		0.50	10	**DF2CA005**	–	–	–
		1	10	**DF2CA01**	–	–	–
		2	10	**DF2CA02**	**DF2CN02**	–	–
		4	10	**DF2CA04**	**DF2CN04**	–	–
		6	10	**DF2CA06**	**DF2CN06**	–	–
		8	10	**DF2CA08**	**DF2CN08**	–	–
		10	10	**DF2CA10**	**DF2CN10**	–	–
		12	10	**DF2CA12**	**DF2CN12**	–	–
		16	10	**DF2CA16**	**DF2CN16**	–	–
		20	10	–	**DF2CN20**	–	–
	400	20	10	**DF2CA20**	–	–	–
		25	10	**DF2CA25**	**DF2CN25**	–	–
		32	10	**DF2CA32**	**DF2CN32**	–	–
Cylindrical 14 x 51	690	0.25	10	**DF2EA002**	–	–	–
		0.50	10	**DF2EA005**	–	–	–
	500	1	10	**DF2EA01**	–	–	–
		2	10	**DF2EA02**	–	**DF3EA02**	–
		4	10	**DF2EA04**	**DF2EN04**	**DF3EA04**	**DF3EN04**
		6	10	**DF2EA06**	**DF2EN06**	**DF3EA06**	**DF3EN06**
		8	10	**DF2EA08**	–	**DF3EA08**	–
		10	10	**DF2EA10**	**DF2EN10**	**DF3EA10**	**DF3EN10**
		12	10	**DF2EA12**	–	**DF3EA12**	–
		16	10	**DF2EA16**	**DF2EN16**	**DF3EA16**	**DF3EN16**
		20	10	**DF2EA20**	**DF2EN20**	**DF3EA20**	**DF3EN20**
		25	10	**DF2EA25**	**DF2EN25**	**DF3EA25**	**DF3EN25**
		32	10	**DF2EA32**	**DF2EN32**	**DF3EA32**	**DF3EN32**
		40	10	**DF2EA40**	**DF2EN40**	**DF3EA40**	**DF3EN40**
	400	50	10	**DF2EA50**	**DF2EN50**	**DF3EA50**	–
Cylindrical 22 x 58	690	4	10	**DF2FA04**	–	**DF3FA04**	–
		6	10	**DF2FA06**	–	**DF3FA06**	–
		8	10	**DF2FA08**	–	**DF3FA08**	–
		10	10	**DF2FA10**	**DF2FN10**	**DF3FA10**	**DF3FN10**
		16	10	**DF2FA16**	–	**DF3FA16**	–
		20	10	**DF2FA20**	**DF2FN20**	**DF3FA20**	**DF3FN20**
		25	10	**DF2FA25**	**DF2FN25**	**DF3FA25**	**DF3FN25**
		32	10	**DF2FA32**	**DF2FN32**	**DF3FA32**	**DF3FN32**
		40	10	**DF2FA40**	**DF2FN40**	**DF3FA40**	**DF3FN40**
		50	10	**DF2FA50**	**DF2FN50**	**DF3FA50**	**DF3FN50**
	500	63	10	**DF2FA63**	**DF2FN63**	**DF3FA63**	**DF3FN63**
		80	10	**DF2FA80**	**DF2FN80**	**DF3FA80**	**DF3FN80**
		100	10	**DF2FA100**	**DF2FN100**	**DF3FA100**	**DF3FN100**
	400	125	10	**DF2FA125**	–	**DF3FA125**	–

For protection of equipment with current peaks
For protection of circuits without significant current peaks

DIN Cartridge fuses
Fuse type aM, type gG

From 32 to 1 250 A

TeSys GS

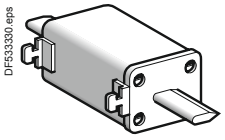

DF2 GA●●●●
DF2 GN●●●●

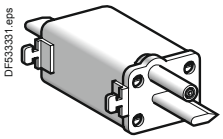

DF4 GA●●●●
DF4 GN●●●●

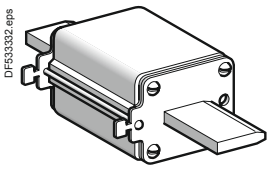

DF2 JA●●●●
DF2 JN●●●●

DIN fuse

Fuse type	Maximum rated voltage	Rating	Sold in lots of		Fuses without striker – Unit reference		Fuses with striker – Unit reference	
	V ∼	A	aM	gG	aM	gG	aM	gG
Blade size 000	690	10	-	10	–	DF2FGN10	–	–
		16	3	10	DF2FGA16	DF2FGN16	–	–
		20	3	10	DF2FGA20	DF2FGN20	–	–
		25	3	10	DF2FGA25	DF2FGN25	–	–
		32	3	10	DF2FGA32	DF2FGN32	–	–
		40	3	10	DF2FGA40	DF2FGN40	–	–
		50	3	10	DF2FGA50	DF2FGN50	–	–
		63	3	10	DF2FGA63	DF2FGN63	–	–
		80	-	10	–	DF2FGN80	–	–
Blade size 00	690	80	3	-	DF2FGA80	–	–	–
		100	3	10	DF2FGA100	DF2FGN100	–	–
		125	3	10	DF2FGA125	DF2FGN125	–	–
	500	160	-	10	–	DF2FGN160	–	–
Blade size 0	690	50	3	3	DF2GA1051	DF2GN1051	–	–
		63	3	3	DF2GA1061	DF2GN1061	–	–
		80	3	3	DF2GA1081	DF2GN1081	–	–
		100	3	3	DF2GA1101	DF2GN1101	–	–
		125	3	3	DF2GA1121	DF2GN1121	DF4GA1121	–
		160	3	3	DF2GA1161	DF2GN1161	DF4GA1161	–
	500	125	-	3	–	–	–	DF4GN1121
		160	-	3	–	–	–	DF4GN1161
		200	3	-	DF2GA1201	–	DF4GA1201	–
Blade size 1	690	160	3	3	DF2HA1161	DF2HN1161	–	–
		200	3	3	DF2HA1201	DF2HN1201	DF4HA1201	DF4HN1201
		250	3	-	DF2HA1251	–	DF4HA1251	–
	500	250	-	3	–	DF2HN1251	–	DF4HN1251
		315	3	-	DF2HA1311	–	DF4HA1311	–
Blade size 2	690	250	3	3	DF2JA1251	DF2JN1251	–	–
		315	3	3	DF2JA1311	DF2JN1311	DF4JA1311	DF4JN1311
		400	3	-	DF2JA1401	–	DF4JA1401	–
	500	400	-	3	–	DF2JN1401	–	DF4JN1401
		500	3	-	DF2JA1501	–	DF4JA1501	–
Blade size 3	690	400	3	-	DF2KA1401	–	–	–
		500	3	3	DF2KA1501	–	DF4KA1501	DF4KN1501
	500	500	-	3	–	DF2KN1501	–	–
		630	3	3	DF2KA1631	DF2KN1631	DF4KA1631	DF4KN1631
Blade size 4	690	800	1	3	DF2LA1801	–	DF4LA1801	DF4LN1801
		1000	1	-	DF2LA1101	–	DF4LA1101	–
	500	800	-	1	–	DF2LN1801	–	–
		1000	-	1	–	DF2LN1101	–	DF4LN1101
		1250	1	1	DF2LA1251	DF2LN1251	DF4LA1251	DF4LN1251

For protection of equipment with current peaks
For protection of circuits without significant current peaks

Auxiliary contacts for IEC and UL switch-disconnector fuses

From 32 to 1250 A

TeSys GS

DF568473.eps

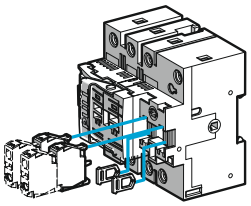

GS1 AM1●●

DF568476.eps

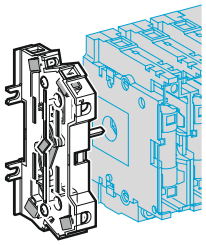

GS1 AN●●●

DF568474.eps

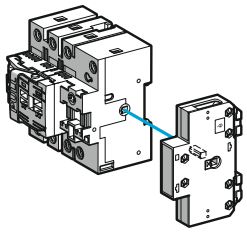

GS1 AM●11

DF568475.eps

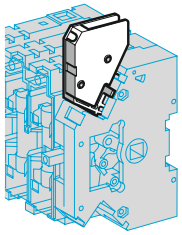

GS1 AM●

Auxiliary early break and/or O, I and Test position signalling contacts (1) (2) (3)

Switch rating A (CEI)	Switch rating A (UL)	Contact type	Type of operator	Rated operating current Ie (A) < 24 V DC	Rated operating current Ie (A) < 240 V AC	Reference
32…1250	30 Compact 30...800	1 N/O	External, front or side-mounted (4)	2.8	3	**GS1AM110**
		1 N/C	External, front or side-mounted (4)	2.8	3	**GS1AM101**

Auxiliary O, I and Test position signalling contacts (3) (5)

Switch rating A (CEI)	Switch rating A (UL)	Contact type	Type of operator	Rated operating current Ie (A) < 24 V DC	Rated operating current Ie (A) < 240 V AC	Reference
Auxiliary O and I position signalling contacts						
50…1250	30...800	1 N/C + 1 N/O	External, front or RH side-mounted Direct	–	10	**GS1AN11**
			External, LH side	–	10	**GS1AN11G***
		2 N/C + 2 N/O	External, front or RH side-mounted Direct	–	10	**GS1AN22**
			External, LH side	–	10	**GS1AN22G***
Auxiliary O, I and Test position signalling contacts (3)						
50…400	30...400	1 N/C + 1 N/O	External, front side-mounted	–	10	**GS1ANT11**
		2 N/C + 2 N/O	External, front side-mounted	–	10	**GS1ANT22**

Auxiliary early break and O and I position signalling contacts

Switch rating A (CEI)	Contact type	Type of operator	Rated operating current Ie (A) < 24 V DC	Rated operating current Ie (A) < 240 V AC	Reference
32	1 C/O	–	12	4	**GS1AM111***
	2 C/O	–	12	4	**GS1AM211***
50…400	1 C/O	Direct, RH side	12	4	**GS1AM1***
	2 C/O	Direct, RH side	12	4	**GS1AM2***

Auxiliary "blown fuse" signalling contacts for use with NF C and DIN fuses (6)

Contact type	Switch rating A (CEI)	Fuse size	Number of poles	Rated operating current Ie (A) < 24 V DC	Rated operating current Ie (A) < 240 V AC	Reference
1st C/O	50	14 x 51	3 or 4	12	4	**GS1AF1***
	100 and 125	22 x 58	3	12	4	**GS1AF23***
			4	12	4	**GS1AF24***
	160	Size 0	3	12	4	**GS1AF33***
			4	12	4	**GS1AF34***
	250 and 400	Size 1 and Size 2	3	12	4	**GS1AF43***
			4	12	4	**GS1AF44***
	630	Size 3	3	12	4	**GS2AF63***
			4	12	4	**GS2AF64***
	1250	Size 4	3	12	4	**GS2AF73***
			4	12	4	**GS2AF74***
2nd C/O	50…1250	–	3 or 4	12	4	**GS1AF***

(*) Not for UL switch-disconnector.

(1) ***For 32 A (CEI), 30 (UL) switch-disconnector-fuses, these auxiliary contacts allow:***
- early break and O and I position signalling,
- O, I and Test position signalling,
- O and I position signalling,
- Test position signalling.
For 50 to 400 A (CEI), 30-400 A (UL) switch-disconnector-fuses, they allow:
- early break,
- O, I and Test position signalling,
- O and I position signalling,
- Test position signalling.
For 630 and 1250 A (CEI), 630 and 800 A (UL) switch-disconnector-fuses, they allow:
- early break and O and I position signalling,

(2) Maximum number of auxiliary contacts:

Switch rating A (CEI)	Switch rating A (UL)		Standard	With additional bracket	Reference of additional bracket
32	30 Compact	CC	4	4 + 4	**GS1AD10**
		J	2	2 + 4	**GS1AD10**
50…160	30...100		4	4 + 4	**GS2AD20**
200…400	200 and 400		8	8 + 4	**GS2AD20**
630…1250	600 and 800		8	8	**–**

(3) The Test position allows testing of the control circuits off-load. Auxiliary contacts ***GS1 AM110****,* ***GS1 AM101*** *and* ***GS1 ANT●●*** *only allow the text function with external handles* ***GS2 AHT●●●****.*

(4) These auxiliary contacts can also be used with 630, 800 and 1250 A switch-disconnector-fuses fitted with a direct front-mounted operator.

(5) Reversible add-on attachments for converting an N/C contact to an N/O contact and vice versa.

(6) For striker fuses (BS fuses are not available with striker).

Handles

From 32 to 1250 A

TeSys GS



GS1 AH01

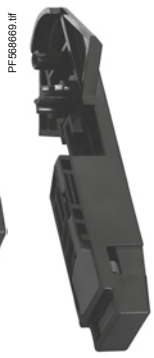

GS1 AH02



GS2 AH●10
GS2 AH●20

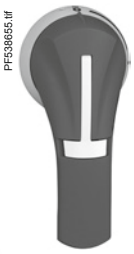

GS2 AH●30
GS2 AH●40

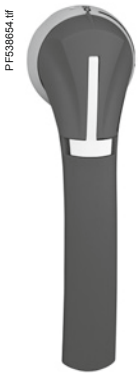

GS2 AH●50
GS2 AH●60



GS2 AH●70
GS2 AH●80

Handles for direct operators

Switch rating A (CEI)	Switch rating A (UL)	Type of operator	Handle colour	Reference
Handles for direct operators, padlockable				
-	30 Compact	Front-mounted	Black	**GS2AH106**
32	-	Front	Black	**GS1AH103**
50 and 63	-	RH side	Black	**GS1AH01**
100…400	-	RH side	Black	**GS1AH02**
-	600 and 800	Front-mounted	Black	**GS2AH107**
630 and 800	-	Front	Black	**GS2AH104**
1250	-	Front	Black	**GS2AH105**

Handles for external operator

Switch rating A (CEI)	Switch rating A (UL)	Handle colour	Degree of protection	Protection index Nema	Reference
Handles for front-mounted external operators, padlockable and lockable in position O (1) Door interlock in I position (2)					
32…63	-	Black/Grey	IP 65	–	**GS2AH510**
			IP55	–	**GS2AH515**
		Red/Yellow	IP 65	–	**GS2AH520**
100…400	-	Black/Grey	IP 65	–	**GS2AH530**
			IP55	–	**GS2AH535**
		Red/Yellow	IP 65	–	**GS2AH540**
630 and 800	-	Black/Grey	IP65	–	**GS2AH550**
		Red/Yellow	IP65	–	**GS2AH560**
1250	-	Black/Grey	IP65	–	**GS2AH570**
		Red/Yellow	IP65	–	**GS2AH580**
-	30 Compact	Black/Grey	–	1, 3R, 12	**GS2AH110**
		Red/Yellow	–	1, 3R, 12	**GS2AH120**
		Black/Grey	–	1, 3R, 4, 4X, 12	**GS2AH410**
		Red/Yellow	–	1, 3R, 4, 4X, 12	**GS2AH420**
-	30…400	Black/Grey	–	1, 3R, 12	**GS2AH130**
		Red/Yellow	–	1, 3R, 12	**GS2AH140**
		Black/Grey	–	1, 3R, 4, 4X, 12	**GS2AH430**
		Red/Yellow	–	1, 3R, 4, 4X, 12	**GS2AH440**
-	600 and 800	Black/Grey	–	1, 3R, 12	**GS2AH150**
		Red/Yellow	–	1, 3R, 12	**GS2AH160**
Handles for front-mounted external operators with test facility (3), padlockable and lockable in "O" position (1). Door interlock in "I" position (2)					
32…63	-	Black/Grey	IP 65	–	**GS2AHT510**
		Red/Yellow	IP65	–	**GS2AHT520**
100…400	-	Black/Grey	IP65	–	**GS2AHT530**
		Red/Yellow	IP65	–	**GS2AHT540**
-	30 Compact	Black/Grey	–	1, 3R, 12	**GS2AHT110**
		Red/Yellow	–	1, 3R, 12	**GS2AHT120**
		Black/Grey	–	1, 3R, 4, 4X, 12	**GS2AHT410**
		Red/Yellow	–	1, 3R, 4, 4X, 12	**GS2AHT420**
-	30…400	Black/Grey	–	1, 3R, 12	**GS2AHT130**
		Red/Yellow	–	1, 3R, 12	**GS2AHT140**
		Black/Grey	–	1, 3R, 4, 4X, 12	**GS2AHT430**
		Red/Yellow	–	1, 3R, 4, 4X, 12	**GS2AHT440**
Handles for external right-hand side-mounted operators, padockable and lockable in "O" position (1)					
32…63	-	Black/Grey	IP 65	–	**GS2AH210**
			IP55	–	**GS2AH215**
		Red/Yellow	IP65	–	**GS2AH220**
100…400	-	Black/Grey	IP65	–	**GS2AH230**
			IP55	–	**GS2AH235**
		Red/Yellow	IP65	–	**GS2AH240**
630…1250	-	Black/Grey	IP65	–	**GS2AH250**
		Red/Yellow	IP65	–	**GS2AH260**
Handles for external left-hand side-mounted operators, padockable and lockable in "O" position (1)					
32…63	-	Black/Grey	IP 65	–	**GS2AH310**
		Red/Yellow	IP65	–	**GS2AH320**
100…400	-	Black/Grey	IP65	–	**GS2AH330**
		Red/Yellow	IP65	–	**GS2AH340**
630…1250	-	Black/Grey	IP65	–	**GS2AH350**
		Red/Yellow	IP65	–	**GS2AH360**

*(1) Lockable with device **GS2AX1,** to be ordered separately.*
(2) Door interlock override by means of a tool.
*(3) The Test facility allows testing of the control circuits off-load, by using auxiliary contacts **GS1AM110**, **GS1AM101** or **GS1ANT●●**. In the "Test" position, the enclosure door can be opened.*

Accessories

From 32 to 1250 A

TeSys GS

GS2AE5_AE8.psd



GS2 AE5

GS2AE2.psd



GS2 AE2 - GS2 AE21

GS2AE8_AE81.psd



GS2 AE8 - GS2 AE81

Shafts for external operators

Switch rating A (CEI)	A (UL)	Shaft length mm	Shaft cross section mm	Reference
32	30 Compact	200	5 x 5	**GS2AE82**
		320	5 x 5	**GS2AE8**
		400	5 x 5	**GS2AE81**
50…400	30...400	200	10 x 10	**GS2AE22**
		320	10 x 10	**GS2AE2**
		400	10 x 10	**GS2AE21**
630…1250	600 and 800	200	12 x 12	**GS2AE52**
		320	12 x 12	**GS2AE5**
		40	12 x 12	**GS2AE51**

Terminal protection shrouds for upstream or downstream connector plates

Switch rating A (CEI)	A (UL)	Number of poles	Reference
50 and 63	30 Compact, 30...60 (3P)	3 or 4	(1)
100…160	100	3	**GS1AP33**
	–	4	**GS1AP34**
200…400	200	3	**GS1AP43**
	–	4	**GS1AP44**
–	400	3	**GS1APU53**
630…800	600 and 800	3	**GS2AP73**
	–	4	**GS2AP64**
1250	–	3	**GS2AP83**
		4	**GS2AP84**

Devices for locking fuse covers in "I" position (2)

Switch rating A	Fuse size	Number of poles	Reference
50	14 x 51	3 or 4	(3)
63	Size 00C	3 or 4	**GS1AV1**
100…160	22 x 58, Size 00	3 or 4	**GS1AV2**
160	Size 0	3	**GS1AV33**
		4	**GS1AV34**
250	Size 1	3	**GS1AV53**
		4	**GS1AV54**
400	Size 2	3	**GS1AV73**
		4	**GS1AV74**

Cage terminals for connection of bare cables (without lug)

Switch rating A	Number of poles	Reference
50 and 63	3 or 4	(4)
100…160	3	**GS1AW33**
	4	**GS1AW34**
200…250	3	**GS1AW43**
	4	**GS1AW44**

External handle locking device

Switch rating A	Description	Reference
32…1250	Device for RONIS EL11AP keylock (lock to be ordered separately).	**GS2AX1**

Height compensation plate for external handles

Switch rating A (CEI)	A (UL)	Description	Degree of protection	Reference
32…1250	30 Compact, 30...400	Allows a new GS2●● handle to be fitted on existing cut-outs	IP 65	**GS2AH001**

Flat mounting kit

Switch rating A	Description	Reference
50…400	The kit, for use with a front-mounted external handle, includes: ■ a 200 mm shaft, cross section 10 x 10 mm, ■ an adapter plate	**GS2ADL2**

(1) For these ratings, the switch-disconnector-fuses are fitted with terminal covers as standard.
(2) For NF C and DIN switch-disconnector-fuses fitted with right-hand mounted direct operator.
(3) For this rating, switch-disconnector-fuses are fitted with a cover locking device as standard.
(4) For these ratings, switch-disconnector-fuses are fitted with cage terminals as standard.

TeSys GS

Technical Data for Designers

Contents

Characteristics:
> switch-disconnector fuses .....B5/16 to B5/21
> auxiliary contacts B5/22
Dimensions .....B5/23 to B5/31
Schemes B5/31

IEC switch-disconnector-fuses
For use with NFC or DIN fuses

From 32 to 1250 A

TeSys GS

Switch-disconnector-fuse characteristics

Type				GS1 DD	GS● F	GS● G	GS● J
Environment							
Conforming to standards	Switch-disconnector-fuses			IEC 60947-3			
	Circuit breakers			IEC 60269-1 and 2			
Product certifications				ASEFA/LOVAG, LROS (pending)			
Degree of protection conforming to IEC 60529	On front panel with terminal covers			IP 20			
Ambient air temperature around the device	Storage		°C	-40…+80			
	Operation		°C	-20…+70			
Flame resistance conforming to IEC 60695-2-1	Body		°C	960	960		
	Fuse cover		°C	–	850		
Pole characteristics							
Conventional thermal current (Ith) for ambient temperature ≤ 40 °C			A	32	50	63	100
Fuse size				10 x 38	14 x 51	T00C	22 x 58
Rated insulation voltage (Ui)			V	800	750	750	750
Rated impulse withstand voltage (Uimp)			kV	8	8	8	8
Rated operational current (Ie)	Cat. AC-23A/B (1)	∼ 400 V	A	32	50	63	100
		∼ 500 V	A	32	50	63	100
		∼ 690 V	A	32	50	63	100 (3)
	Cat. DC-23A/B (1)	⎓ 440 V (2)	A	20	40	40	100
Rated operational power	Cat. AC-23A/B (1)	∼ 400 V	kW	15	25	30	51
		∼ 500 V	kW	18.5	33	40	63
		∼ 690 V	kW	25	45	55	90
Rated conditional short-circuit current	I rms at ∼ 400 V with protection by gG (gl) fuses		kA	100	100	100	100
	Rating of associated fuses		A	32	50	63	100
Peak value of permissible current (dynamic short-circuit withstand)	Conforming to IEC 60269-1	∼ 400 V	kA	5.5	7.6	10.6	20
Rated making capacity	I rms at 400 V Cat. AC-23B		A	320	500	630	1000
Rated breaking capacity	I rms at 400 V Cat. AC-23B		A	256	400	500	800
Mechanical durability	Number of operating cycles			20000	10000	10000	10000
Electrical durability	Number of operating cycles cat. AC/DC-23A/B (1)			1500/300	1500/300	1500/300	1500/300
Cabling	Cable (c.s.a. min/max)		mm²	2.5/16	6/25	10/25	25/95
	Bars (max width)		mm	–	–	–	20
Tightening torque			N.m	3	3.2	3.2	12

(1) Category "A": frequent operating cycles, category "B": infrequent operating cycles.
(2) 2 poles in series per phase.
(3) With terminal covers.
(4) Poles not juxtaposed.

	GS● K	GS● KK	GS● LL	GS● L	GS● N	GS● QQ	GS2 S	GS2 V
	IEC 60947-3							
	IEC 60269-1 and 2							
	ASEFA/LOVAG, LROS (pending)							
	IP 20							
	-40…+80							
	-20…+70							
	960							
	850							
	125	125	160	160	250	400	630	1250
	22 x 58	T00	T00	T0	T1	T2	T3	T4
	750	750	750	750	750	800	1000	1000
	8	8	8	8	8	8	12	12
	125	125	160	160	250	400	630	1000
	125	125	160	160	250	315	500	800
	100 (3)	100 (3)	125 (3)	125 (3)	250 (3)	250/315	315/400	630
	100	100	125	125	200	200/315 (4)	400/630 (4)	1000
	63	63	80	80	132	220	355	560
	90	90	110	110	160	220	355	560
	80	80	110	110	220	220/295	295/400	400/475
	100	100	100 (50)	100	100	50	100	100
	125	125	125 (160)	160	250	400	630	1250
	20	20	22.7	20	32.5	40	70	90
	1250	1250	1600	1600	2500	4000	6300	10 000
	1000	1000	1280	1280	2000	3200	5040	8000
	10000	10000	10000	10000	10000	10000	8000	5000
	1000/200	1000/200	1000/200	1000/200	1000/200	1000/200	1000/200	500/100
	35/95	35/95	50/95	50/95	95/240	185/240	2 x 150 / 2 x 300	- / 4 x 185
	20	20	20	20	32	45	63	80
	12	12	12	12	25	25	44	44

IEC switch-disconnector-fuses
For use with BS fuses

From 32 to 1250 A

TeSys GS

Switch-disconnector-fuse characteristics

Type				GS1 DDB	GS2 DB	GS2 GB	GS2 JB
Environment							
Conforming to standards	Switch-disconnector-fuses			IEC 60947-3			
	Circuit breakers			IEC 60269-1 and 2			
Product certifications				ASEFA/LOVAG, LROS (pending)			
Degree of protection conforming to IEC 60529	On Front panel, with terminal covers			IP 20			
Ambient air temperature around the device	Storage		°C	-40…+80			
	Operation		°C	-20…+70			
Flame resistance conforming to IEC 60695-2-1	Body		°C	960			
	Fuse cover		°C	–		850	
Pole characteristics							
Conventional thermal current (Ith) for ambient temperature ≤ 40 °C			A	32	32	63	100
Fuse size				A1	A1	A2-A3	A4 Ø ≤ 31 mm
Rated insulation voltage (Ui)			V	800	750	750	750
Rated impulse withstand voltage (Uimp)			kV	8	8	8	8
Rated operational current (Ie)	Cat. AC-23A/B (1)	∼ 400 V	A	32	32	63	100
		∼ 500 V	A	32	32	63	100
		∼ 690 V	A	32	32	63	100 (4)
	Cat. DC-23A/B (1)	⎓ 440 V (2)	A	20	20	40	100
Rated operational power	Cat. AC-23A/B (1)	∼ 400 V	kW	15	15	30	51
		∼ 500 V	kW	18.5	18.5	40	63
		∼ 690 V	kW	25	25	55	90
Rated conditional short-circuit current	I rms at ∼ 400 V with protection by gG (gl) fuses		kA	80	80	80	80
	Rating of associated fuses		A	32	32	63	100
Peak value of permissible current (dynamic short-circuit withstand)	Conforming to IEC 60269-1	∼ 400 V	kA	5.5	9	10.6	20
Rated making capacity	I rms at 400 V Cat. AC-23B		A	320	320	630	1000
Rated breaking capacity	I rms at 400 V Cat. AC-23B		A	256	256	500	800
Mechanical durability	Number of operating cycles			20000	10000	10000	10000
Electrical durability	Number of operating cycles cat. AC/DC-23A/B (1)			1500/300	1500/300	1500/300	1500/300
Cabling	Cable (c.s.a. min/max)		mm^2	2.5/16	6/25	10/25	25/95
	Bars (max width)		mm	–	–	–	20
Tightening torque			N.m	3	3.2	3.2	12

(1) Category "A": frequent operating cycles, category "B": infrequent operating cycles.
(2) 2 poles in series per phase.
*(3) Fit switch-disconnector-fuses **GS2 LB** with B1 or B2 fuses and **GS2 LLB** with A4 fuses.*
(4) With terminal covers.
(5) Poles not juxtaposed.

	GS2 LB or LLB [3]	GS2 MMB	GS2 NB	GS2 PPB	GS2 QQB	GS2 SB	GS2 TB	GS2 VB
	IEC 60947-3							
	IEC 60269-1 and 2							
	ASEFA/LOVAG, LROS (pending)							
	IP 20							
	-40…+80							
	-20…+70							
	960							
	850							
	160	200	250	315	400	630	800	1250
	A4. B1-B2 [3]	B1-B2	B1…B3	B1…B3	B1…B4	C1-C2	C1…C3	D1
	750	750	750	800	800	1000	1000	1000
	8	8	8	8	8	12	12	12
	160	200	250	315	400	630	800	1000
	160	200	250	315	315	500	630	800
	125 [4]	200/160 [4]	250 [4]	250/315 [4]	250/315	315/400	630	630
	125	200	200	200	200/315 [5]	400/630 [5]	800	1000
	80	100	132	150	220	355	450	560
	110	140	160	220	220	355	450	560
	110	150/185	220	220/295	220/295	295/400	400	400/475
	80	80	80	80	80	80	80	80
	160	200	250	315	400	630	800	1250
	22.7	32.5	32.5	40	40	70	80	90
	1600	2000	2500	3150	4000	6300	8000	10 000
	1280	1600	2000	2520	3200	5040	6400	8000
	10000	10000	10000	10000	10000	8000	8000	5000
	1000/200	1000/200	1000/200	1000/200	1000/200	1000/200	500/100	500/100
	50/95	95/240	95/240	185/240	185/240	2 x 150 / 2 x 300	2 x 185 / 2 x 300	- / 4 x 185
	20	32	32	45	45	63	63	80
	12	25	25	25	25	44	44	44

UL, CSA, IEC switch-disconnector-fuses

For use with CC and J fuses

Switch-disconnector-fuse characteristics

Type				GS1 DDU3	GS1 DU3	GS2 EEU3	GS2 EU3N
Environment							
Conforming to standards	Switch-disconnector-fuses			UL 489, CSA 22.2 n°5, IEC 60947-3		UL 98, CSA 22.2 n°4, IEC 60947-3	
	Circuit breakers			IEC 60969-1 and 2			
Degree of protection conforming to IEC 60529	With terminal covers			IP 20			
Ambient air temperature around the device	Storage		°C	-40…+80			
	Operation		°C	-20…+70			
Flame resistance conforming to IEC 60695-2-1	Body		°C	960	960	960	
	Fuse cover		°C	–	–	850	
Pole characteristics							
Conventional thermal current (Ith) for ambient temperature ⩽ 40 °C			A	30	30	30	30
Fuse size				CC	J	CC	J
Rated insulation voltage (Ui)			V	800	800	750	750
Rated impulse withstand voltage (Uimp)			kV	8	8	8	8
Rated operational current (Ie)	Cat. AC-23A/B (1)	∼ 400 V	A	32	32	32	32
		∼ 500 V	A	32	32	32	32
		∼ 690 V	A	32	32	32	32
Rated operational power	Cat. AC-23A/B (1)	∼ 400 V	kW	15	15	15	15
		∼ 500 V	kW	18.5	18.5	18.5	18.5
		∼ 690 V	kW	25	25	25	25
Prospective short-circuit current withstand	Conforming to UL 98 / UL 489	∼ 600 V	kA	100	100	200	200
Peak value of permissible current (dynamic short-circuit withstand)	Conforming to IEC 60269-1	∼ 400 V	kA	5.5	5.5	7.6	17.6
Rated making capacity	I rms at 400 V Cat. AC-23B		A	300	300	300	300
Rated breaking capacity	I rms at 400 V Cat. AC-23B		A	240	240	240	240
Mechanical durability	Number of operating cycles			10000	10000	10000	10000
Electrical durability	Number of operating cycles Cat. AC/DC-23A/B (1)			1500/300	1500/300	1500/300	1500/300
Cabling	Cable (c.s.a. min/max)		mm^2	2.5	2.5	6	6
	Bars (max width)		mm	16	32	25	50
Tightening torque			N.m	3 (for wire)	3 (for wire)	5.5 (for wire)	6.6 (for wire)

(1) Category "A": frequent operating cycles, category "B": infrequent operating cycles.

	GS2 GU3N	GS2 JU3N	GS2 MU3N	GS2 QU3N	GS2 SU3	GS2 TU3
	UL 98, CSA 22.2 n°4, IEC 60947-3					
	IEC 60269-1 and 2					
	IP 20					
	-40…+80					
	-20…+70					
	960					
	850					
	60	100	200	400	600	800
	J	J	J	J	J	L
	750	750	750	800	1000	1000
	8	8	8	8	12	12
	63	100	200	400	630	800
	63	100	200	315	630	630
	63	100	200	250	630	630
	30	51	100	220	355	450
	40	63	140	220	450	560
	55	90	185	220	600	600
	100	200	200	200	200	200
	17.6	22	32	36	80	80
	600	1000	2000	4000	6000	8000
	480	800	1600	3200	4800	6400
	10000	10000	8000	6000	5000	5000
	1500/300	1500/300	1000/200	1000/200	1000/200	500/100
	6	25	95	185	2 x 150	–
	50	20	32	45	100	100
	3.5 (for wire)	4 (for wire)	18 (for lug)	35 (for lug)	35 (for lug)	35 (for lug)

Auxiliary contacts

From 32 to 1250 A

TeSys GS

GS1 AM●11, GS1 AM1 and GS1 AM2 early break and signalling contact characteristics

Conventional thermal current (Ith) for ambient temperature ≤ 40 °C		**A**	16
Rated operational current (Ie)	Cat. AC-15	**A**	127 V: 5 - 230 V: 4 - 400 /415 V: 3 - 440 V: 2
	Cat. DC-13	**A**	24 V: 12 - 48 V: 2 - 110 V: 0.6 - 220 V: 0.4
Durability	Number of operating cycles		Mechanical: 1000000 Electrical: cat. AC-15: 30000
Fuse protection	gG	**A**	6 max
Cabling		**mm**	Faston connectors: 1 x 6.35 or 2 x 2.8

GS1 AN and GS1 ANT signalling contact characteristics

Conventional thermal current (Ith) for ambient temperature ≤ 40 °C		**A**	20
Rated operational current (Ie)	Cat. AC-15	**A**	127 V: 12 - 230 V: 10 - 400/415 V: 8 - 440 V: 6
	Cat. DC-13	**A**	48 V: 4 - 110 V: 1.2 - 220 V: 1
Durability	Number of operating cycles		Mechanical: 30000 Electrical: cat. AC-15: 30000
Fuse protection	gG	**A**	16 max
Cabling	Cable (c.s.a. min/max)	**mm²**	Min: 1.5 - max: 10

GS1 AM110 and GS1 AM101 early break and signalling contact characteristics

Conventional thermal current (Ith) for ambient temperature ≤ 40 °C		**A**	10
Rated operational current (Ie)	Cat. AC-15	**A**	120 V: 6 - 240 V: 3 - 400 V: 1.8 - 480 V: 1.5
	Cat. DC-13	**A**	24 V: 2.8 - 48 V: 1.4 - 125 V: 0.55 - 250 V: 0.27 - 400 V: 0.15
Durability	Number of operating cycles		Mechanical: 5000000 Electrical: cat. AC-15: 1000000
Cabling	Cable (c.s.a. min/max)	**mm²**	Min: 1 x 0.22 - max: 2 x 2.5

GS● AF "blown fuse" signalling contact characteristics

Conventional thermal current (Ith) for ambient temperature ≤ 40 °C		**A**	16
Rated operational current (Ie)	Cat. AC-15	**A**	230 V: 4 - 400 V: 3
	Cat. DC-13	**A**	24 V: 12 - 48 V: 2 - 110 V: 0.6 - 220 V: 0.4
Durability	Number of operating cycles		Mechanical: 30000 Electrical: cat. AC-15: 30000
Cabling		**mm**	Faston connectors: 1 x 6.35

IEC switch-disconnector-fuses
GS1 ●● (32 A)

GS1 ●● (32 A)

Direct front-mounted operator

GS1 DD

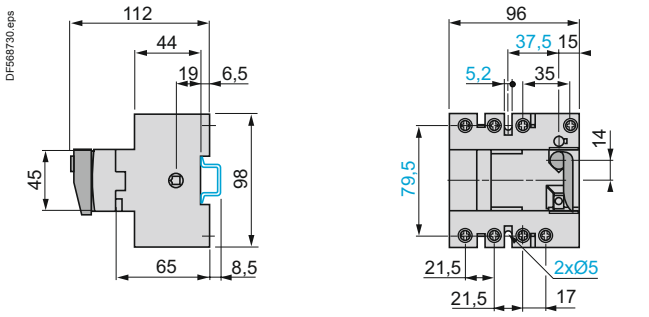

GS1 DDB

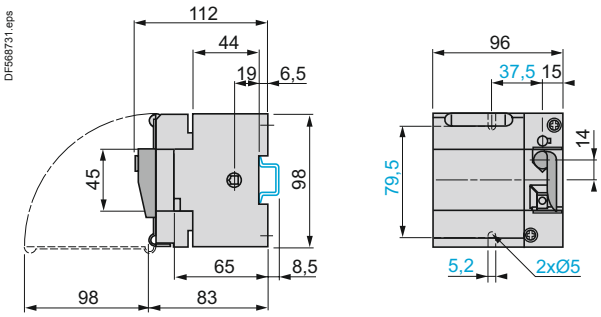

External front-mounted operator

GS1 DD

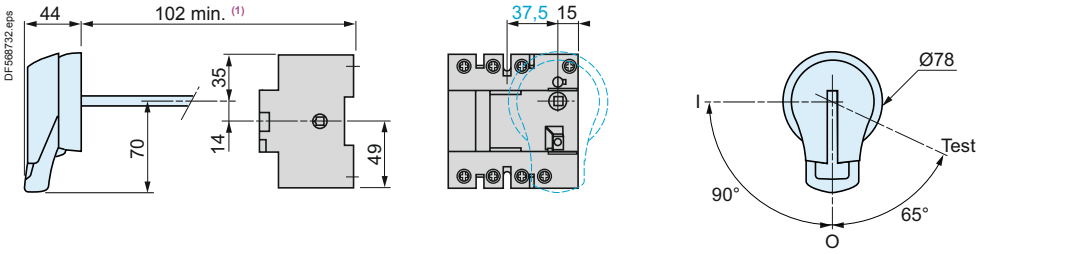

Door cut-out

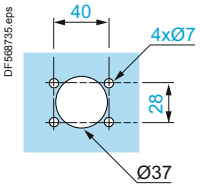

GS1 DDB

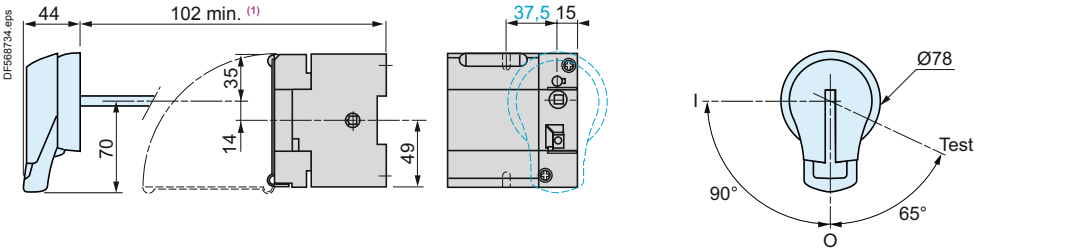

Door cut-out

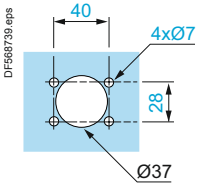

(1) With 1 or 2 auxiliary contacts GS1 AM1●●: 130 mm.
(2) With 3 or 4 auxiliary contacts GS1 AM1●●: 155 mm.

External right-hand side-mounted operator

GS1 DD

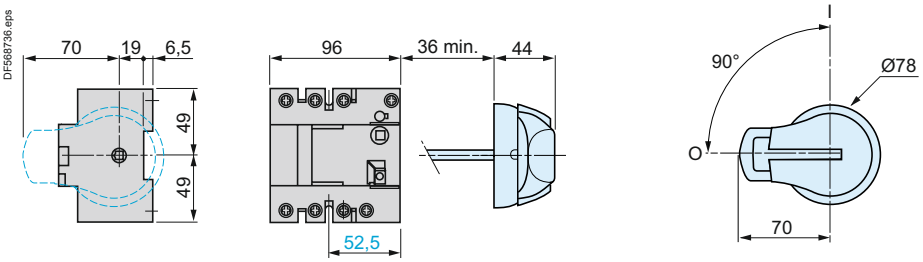

Door cut-out

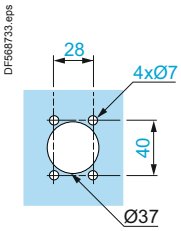

GS1 DDB

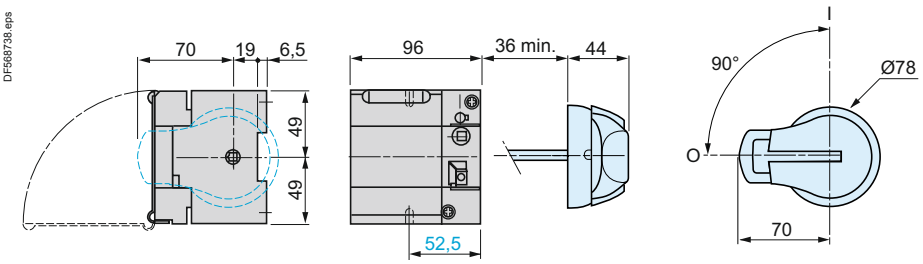

Door cut-out

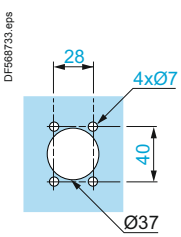

GS1 ●● (50…400 A)

Direct right-hand side-mounted operator

GS1 FD (50 A), GD (63 A), JD (100 A), KD, KKD (125 A), LD, LLD (160 A), ND (250 A) and QQD (400 A)

DF538732.eps

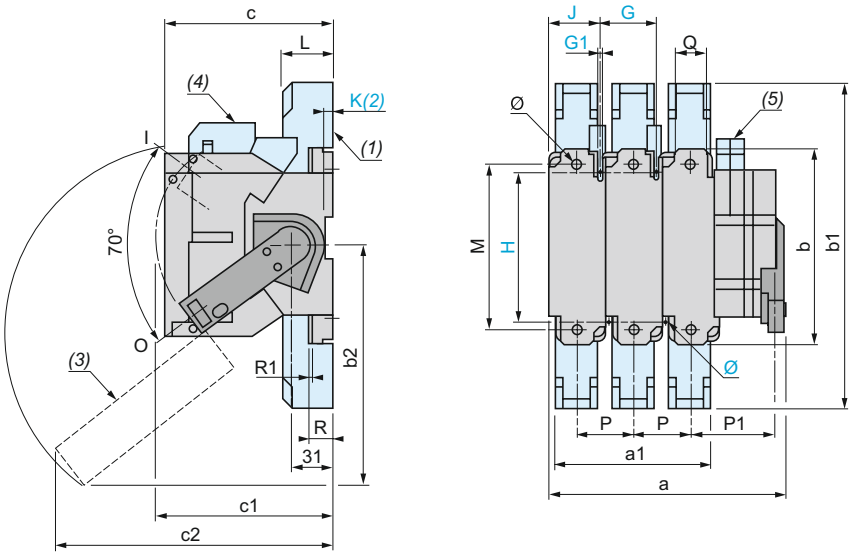

GS1		a	a1	b	b1	b2	c	c1	c2	G	G1	H	J	K	Ø	L	M	P	P1	Q	R	R1	Ø
FD	3P	118	–	118	–	–	87	134	–	27	5.4	106	31	6.5	5	–	–	27	33.5	–	–	–	–
	4P	145	–	118	–	–	87	134	–	27	5.4	106	31	6.5	5	–	–	27	33.5	–	–	–	–
GD	3P	133	–	118	–	159	116.5	134	145	32	5.4	106	36	6.5	5	–	–	32	36	–	–	–	–
	4P	165	–	118	–	159	116.5	134	145	32	5.4	106	36	6.5	5	–	–	32	36	–	–	–	–
JD, KD	3P	150	108	162	268	–	116	173	–	36	5.4	127	40	–	5	44	141	36	38	20	19.5	2.5	8.5
	4P	186	144	162	268	–	116	173	–	36	5.4	127	40	–	5	44	141	36	38	20	19.5	2.5	8.5
KKD, LLD	3P	150	108	162	268	141	126.5	173	193	36	5.4	127	40	–	5	44	141	36	38	20	19.5	2.5	8.5
	4P	186	144	162	268	141	126.5	173	193	36	5.4	127	40	–	5	44	141	36	38	20	19.5	2.5	8.5
LD	3P	192	136	162	268	174	136.5	173	229	50	5.4	140	54	–	5	44	141	50	45	20	19.5	2.5	8.5
	4P	242	172	162	268	174	136.5	173	229	50	5.4	140	54	–	5	44	141	50	45	20	19.5	2.5	8.5
ND	3P	253	180	195	345	185	146	173	251	60	6.4	162	64	–	6	65	166	60	81	32	19.5	2.5	11
	4P	313	240	195	345	185	146	173	251	60	6.4	162	64	–	6	65	166	60	81	32	19.5	2.5	11
QQD	3P	271	192	205	355	200	149	173	260	66	6.4	172	70	–	6	65	175	66	86	50	20	3	11
	4P	337	258	205	355	200	149	173	260	66	6.4	172	70	–	6	65	175	66	86	50	20	3	11

(1) Terminal cover.
(2) Mounting on ⊔ rail only for GS1 FD and GS1 GD (50 and 63 A).
(3) Protective screen, lockable in I position.
(4) 1 or 2 auxiliary contacts GS1 AF●●.
(5) 1 or 2 auxiliary contacts GS1 AM●.

GS2 ●● (32…400 A)

External front and right-hand side-mounted operator

GS2 DB (32 A), F (50 A), G, GB, JB (63 A), J (100 A), K, KK (125 A), L, LL, LB, LLB (160 A), MMB (200 A), N, NB (250 A), PPB (315 A), QQ and QQB (400 A)

DF538733.eps

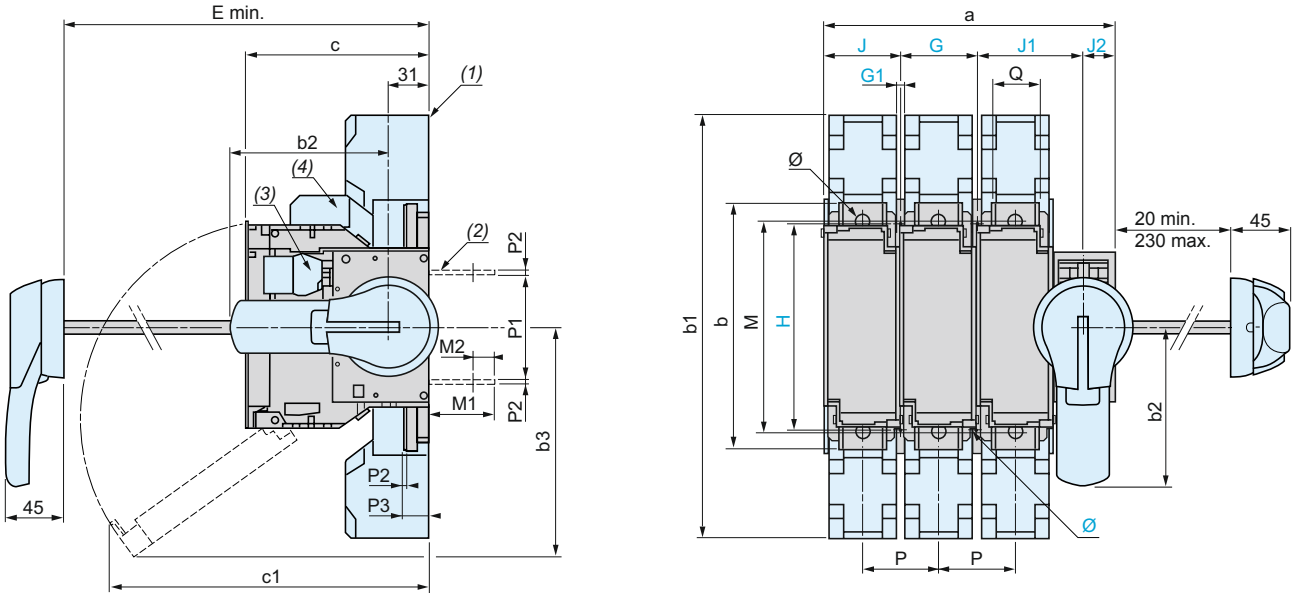

GS2		a	b	b1	b2	b3	c	c1	E min.	G	G1	H	J	J1	J2	Ø	M	M1	M2	P	P1	P2	P3	Q	Ø
F, DB	3P	121	118	–	70	85	87 (5)	153	100 (5)	27	5.4	106	31	45	18	5	–	15	6	27	59	2	–	12	–
	4P	148	118	–	70	85	87 (5)	153	100 (5)	27	5.4	106	31	45	18	5	–	15	6	27	59	2	–	12	–
G, GB	3P	136	118	–	70	159	116.5 (6)	145	125	32	5.4	106	36	50	18	5	–	15	6	32	59	2	–	12	–
	4P	168	118	–	70	159	116.5 (6)	145	125	32	5.4	106	36	50	18	5	–	15	6	32	59	2	–	12	–
J, JB, K	3P	148	162	268	125	141	116 (6)	187	135	36	5.4	127	40	54	18	5	141	41	8	36	62	2.5	19.5	20	8.5
	4P	184	162	268	125	141	116 (6)	187	135	36	5.4	127	40	54	18	5	141	41	8	36	62	2.5	19.5	20	8.5
KK, LL	3P	148	162	268	125	141	126.5 (6)	193	135	36	5.4	127	40	54	18	5	141	41	8	36	62	2.5	19.5	20	8.5
	4P	184	162	268	125	141	126.5 (6)	193	135	36	5.4	127	40	54	18	5	141	41	8	36	62	2.5	19.5	20	8.5
L, LB, LLB	3P	190	162	268	125	174	136.5	229	145	50	5.4	140	54	64	18	5	141	41	8	50	62	2.5	19.5	20	8.5
	4P	240	162	268	125	174	136.5	229	145	50	5.4	140	54	64	18	5	141	41	8	50	62	2.5	19.5	20	8.5
MMB, NB, N	3P	234	195	345	125	185	146	251	154	60	6.4	162	64	86	25	6	166	52	17	60	84	2.5	19.5	32	11
	4P	294	195	345	125	185	146	251	154	60	6.4	162	64	86	25	6	166	52	17	60	84	2.5	19.5	32	11
PPB, QQB, QQ	3P	252	205	355	125	200	149	260	157	66	6.4	172	70	91	25	6	175	54	14.5	66	84	3	20	50	11
	4P	318	205	355	125	200	149	260	157	66	6.4	172	70	91	25	6	175	54	14.5	66	84	3	20	50	11

(1) Terminal cover.
(2) Rear access connector plates (option).
(3) 1 to 8 auxiliary contacts GS1 AM1●●.
(4) 1 or 2 auxiliary contacts GS1 AF●●.
(5) 1 auxiliary contact GS1 AM1●●: + 23.5 mm, 2 auxiliary contacts GS1 AM1●●: + 47 mm.
(6) 132 mm with 2 auxiliary contacts GS1 AM1●●.

Door cut-out

For external front-mounted operator

DF568742.eps

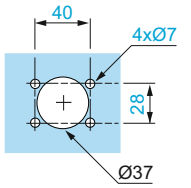

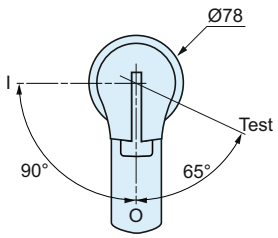

For external right-hand side-mounted operator

DF568743.eps

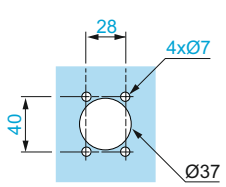

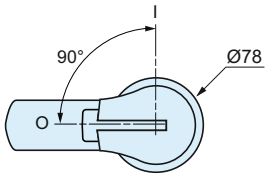

IEC switch-disconnector-fuses
GS2 ●● (630...1250 A)

GS2 ●● (630…1250 A)

Direct front-mounted operator

GS2 S, SB (630 A), TB (800 A), V and VB (1250 A)

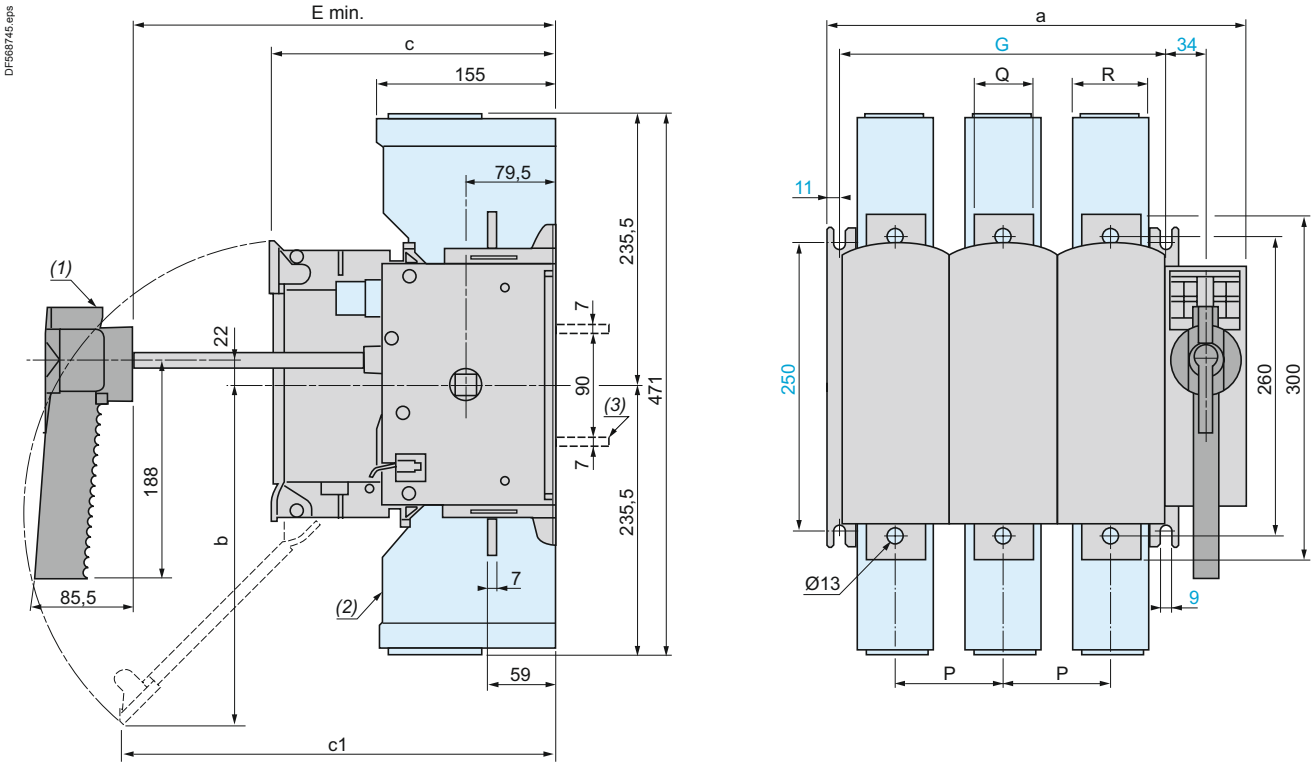

GS2		a	b	c	c1	E min.	G	P	Q	R
S, SB, TB	3P	364	300	250	380	265	284	94	51	65
	4P	458	300	250	380	265	378	94	51	65
V, VB	3P	442	355	289	295	304	362	120	77	88
	4P	562	355	289	295	304	482	120	77	88

(1) Handle GS2 AH104 for GS2S, GS2 SB and GS2 TB.
(2) Terminal cover.
(3) Rear access connector plates (GS2 V and GS2 VB).

Handle GS2 AH105 for GS2 V and GS2 VB (direct front-mounted operator)

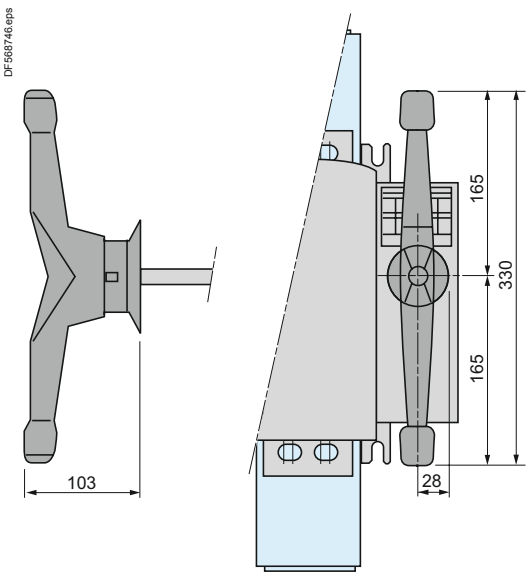

Connector plates for GS2 V and GS2 VB

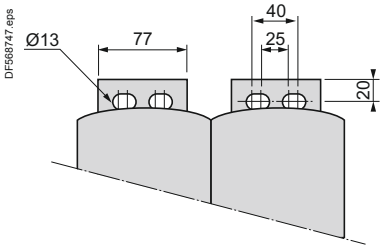

TeSys GS

GS2 ●● (630…1250 A)

External front and right-hand side-mounted operator

GS2 S, SB (630 A), TB (800 A), V and VB (1250 A)

DF538734.eps

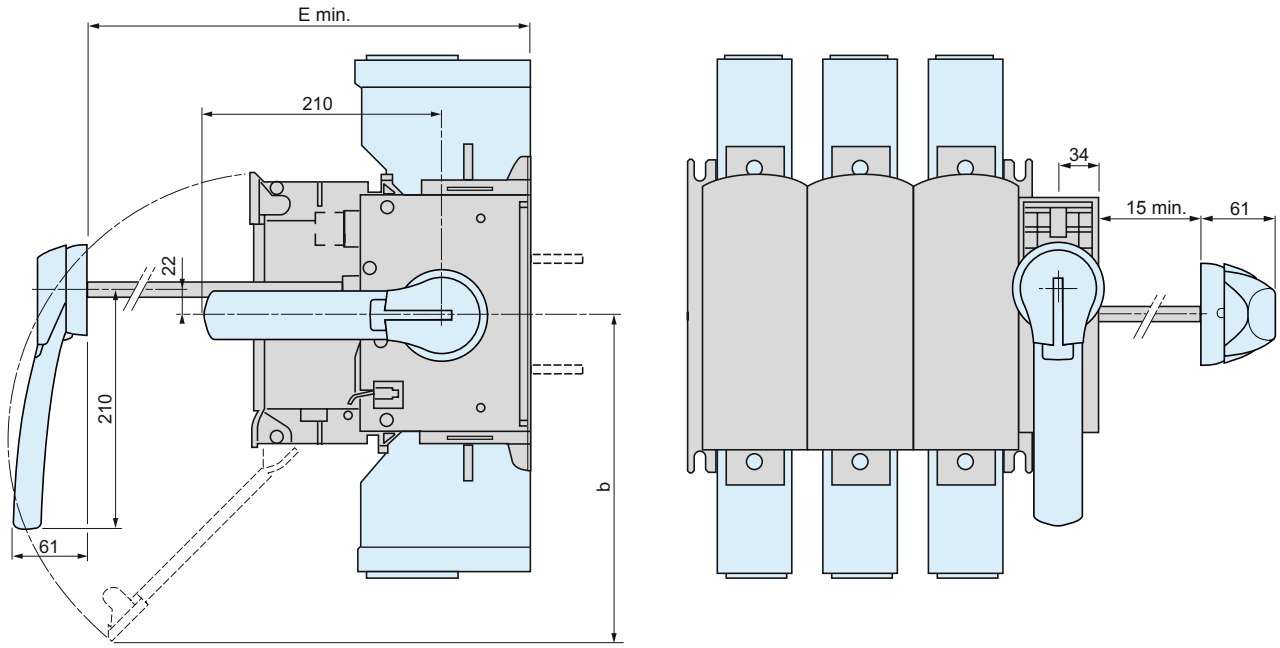

GS2		b	E min.
S, SB, TB	3P	297	265
	4P	297	265
V, VB	3P	350	304
	4P	350	304

Handle GS2 AH570 or GS2 AH580 for GS2 V and GS2 VB (external front-mounted operator)

DF568749.eps

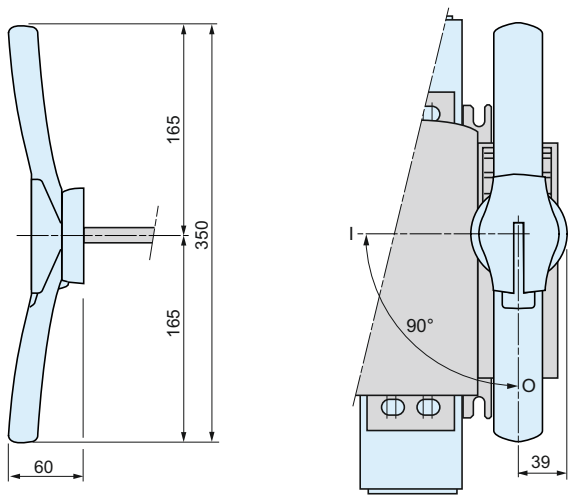

Door cut-out

For external front-mounted operator

DF568750.eps

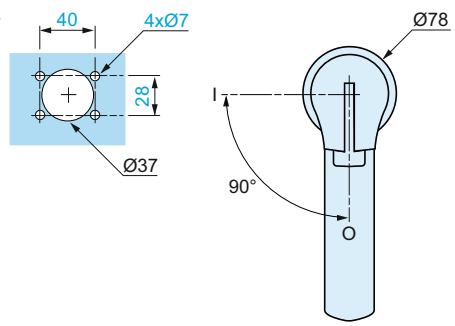

For external right-hand side-mounted operator

DF568751.eps

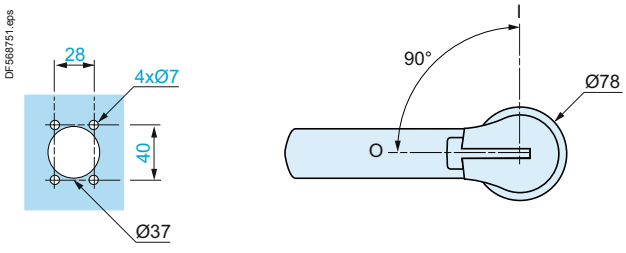

UL, CSA, IEC switch-disconnector-fuses

GS1 ●● and GS2 ●● (30 and 60 A)

Switch-disconnectors-fuses, 30 and 60 A

GS1DU3 (30 A) class CC fuses, GS1DDU3 (30 A) class J fuses

DB417416.eps

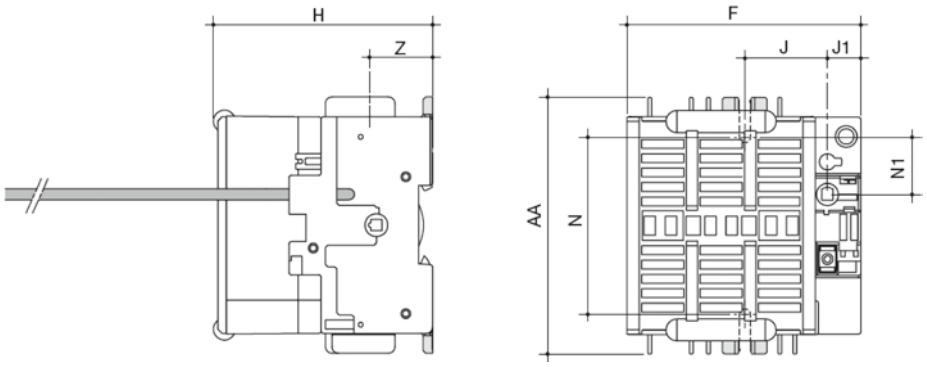

Rating	F	H	J	J1	N	N1	AA	Z
30 / CC	96	83.5	37.5	15	79.5	25.5	116	28.5
30 / J	105	99	37.5	15	79.5	25.5	116	28.5

GS2EEU3 (30 A) class CC fuses

DB417417.eps

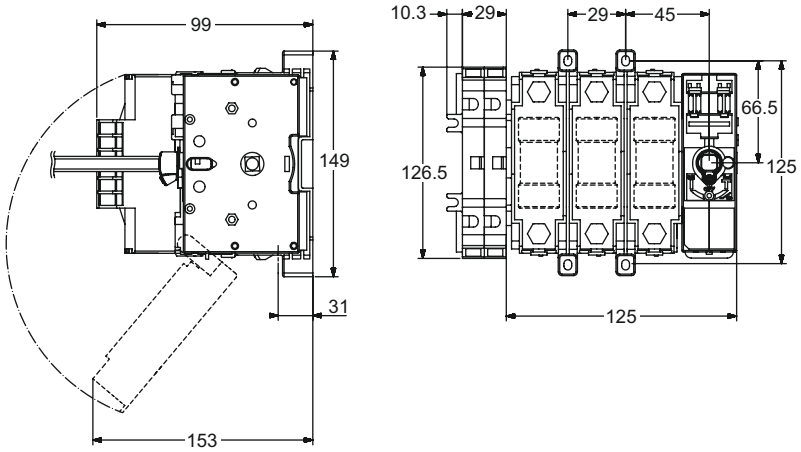

GS2EU3N, GS2GU3N (60 A) class J fuses

DB417418.eps

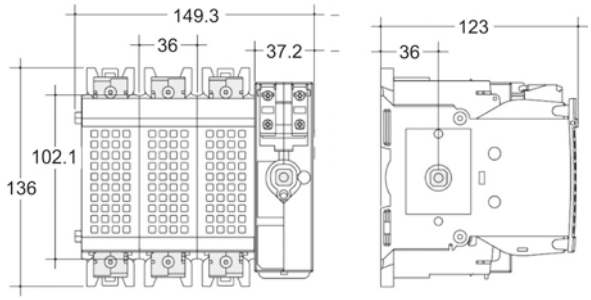

Accessories

Handle for 30 and 60 A switch-disconnector-fuses

External front handle | **Door cut-out** | **External side handle** | **Door cut-out**

DF568732.eps

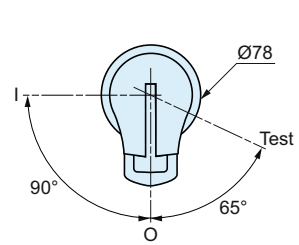

DF568735.eps

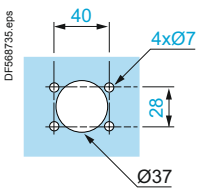

DF568736.eps

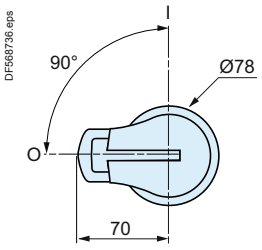

DF568733.eps

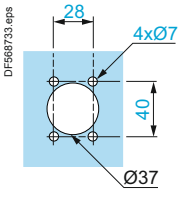

Switch-disconnectors, 100 to 400 A

GS2JU3N (100 A) class J fuses

DB417419.eps

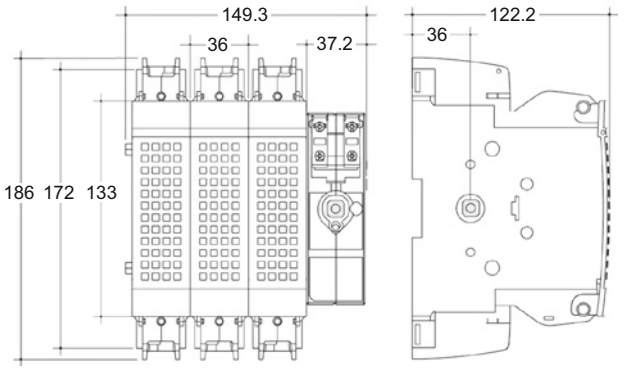

GS2MU3N (200 A) class J fuses

DB417420.eps

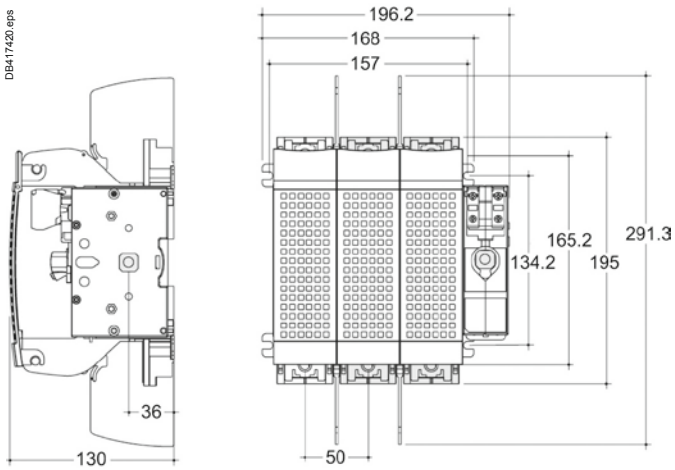

GS2QU3N (400 A) class CC fuses

DB417421.eps

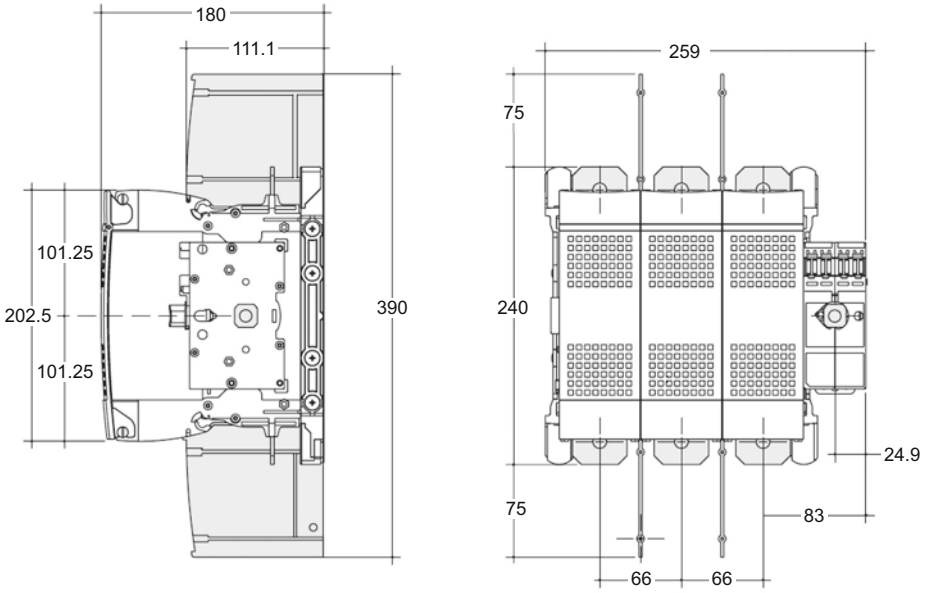

Accessories

Handle for 100, 200 and 400 A switch-disconnector-fuses

For external front-mounted operator

DF568742.eps

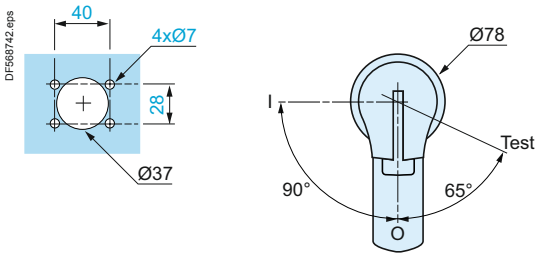

For external right-hand side-mounted operator

DF568743.eps

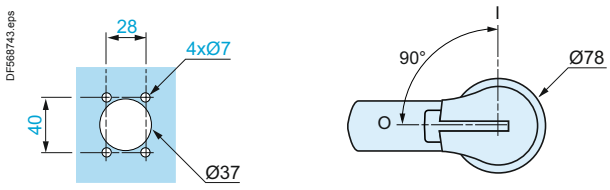

UL, CSA, IEC switch-disconnector-fuses

GS2 ●● (600 and 800 A)

Switch-disconnectors, 600 and 800 A

GS2SU3 (600 A), GS2TU3 (800 A) class J fuses

DB417422.eps

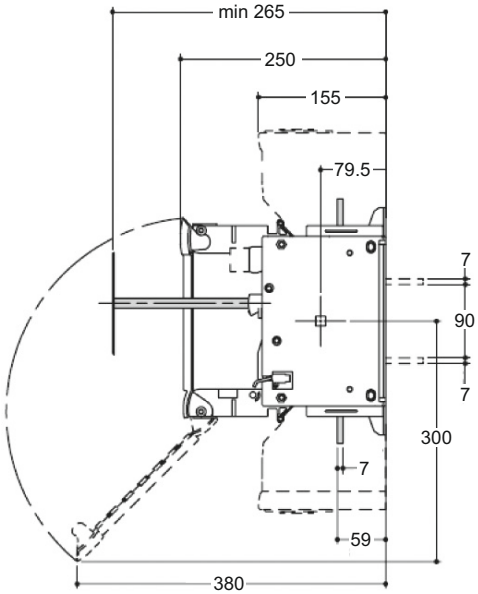

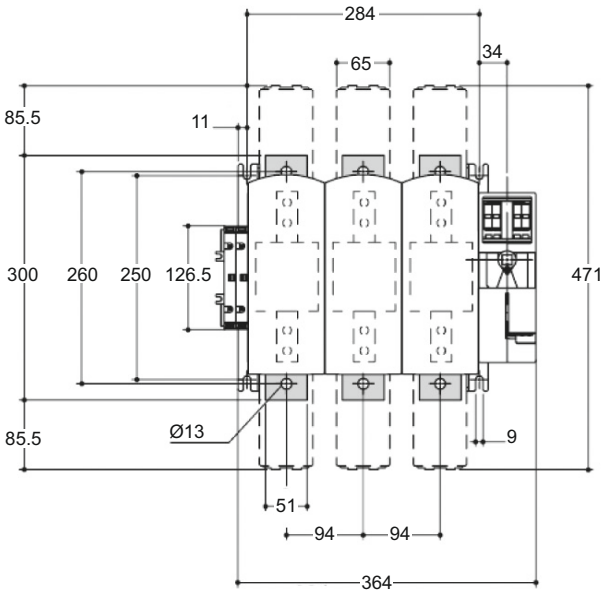

Accessories

Handle for 600 and 800 A switch-disconnector-fuses

For external front-mounted operator

DF568750.eps

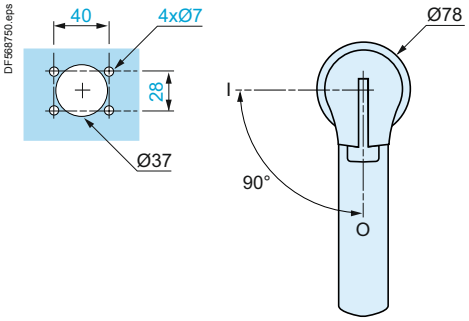

For external right-hand side-mounted operator

DF568751.eps

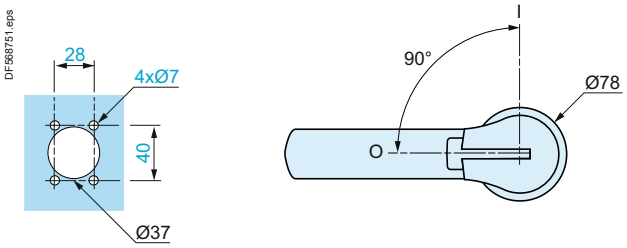

Auxiliary contacts

From 32 to 1250 A

TeSys GS

Auxiliary contacts

GS1 AM111, GS1 AM211

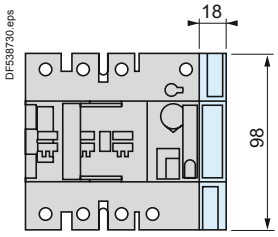

GS1 AM110, GS1 AM101

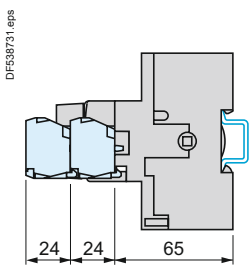

Schemes

3-pole GS

32 to 1250 A

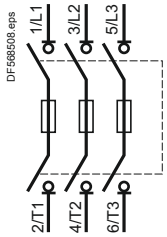

4-pole GS

32 A

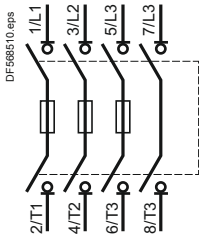

50 to 1250 A

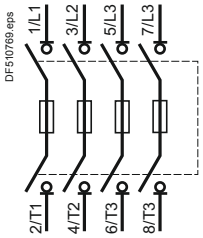

Auxiliary contacts

GS1 AM110

1 N/O



GS1 AM101

1 N/C



GS1 AM111 and GS1 AM1

1 C/O



GS1 AM211 and GS1 AM2

2 C/O

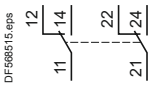

GS1 AN●●

1 N/C + 1 N/O



2 N/C + 2 N/O

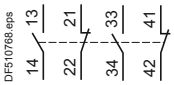

GS1 AF●

1 C/O



2 C/O

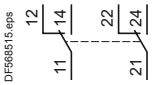

Circuit breakers
TeSys GV, GB

Circuit breakers - TeSys GV, GB

Type of product	Range		Pages
Magnetic circuit breakers for motors TeSys GV	Up to **15**, **30** kW		B6/2
Thermal magnetic circuit breakers for motors TeSys GV	Up to **15**, **37** or **110** kW		B6/4
Add-on blocks, accessories, for motor circuit breakers		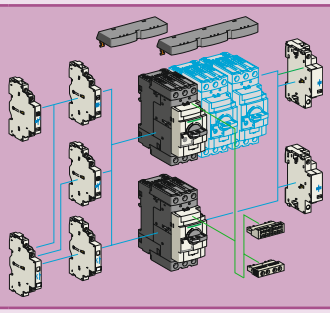	B6/10
Thermal magnetic circuit breakers for control circuits, Solenoid valves or transformers TeSys GB, GV	From **0.5** to **23** A		B6/26

Technical Data for Designers B6/29

TeSys protection components
Magnetic motor circuit breakers
GV2 LE

TeSys GV

DF526144.tif



GV2 LE10

Magnetic motor circuit breakers from 0.06 to 15 kW

GV2 LE: control by rocker lever, connection by screw clamp terminals

Standard power ratings of 3-phase motors 50/60 Hz in category AC-3									Magnetic protection rating	Tripping current Id ± 20 %	Use in association with thermal overload relay	Reference
400/415 V			500 V			690 V						
P	Icu	Ics (1)	P	Icu	Ics (1)	P	Icu	Ics (1)				
kW	kA		kW	kA		kW	kA		A	A		
0.06	★	★	–	–	–	–	–	–	0.4	5	LR2 K0302	**GV2LE03**
0.09	★	★	–	–	–	–	–	–	0.4	5	LR2 K0304	**GV2LE03**
0.12	★	★	–	–	–	0.37	★	★	0.63	8	LR2 K0304	**GV2LE04**
0.18	★	★	–	–	–	–	–	–	0.63	8	LR2 K0305	**GV2LE04**
–	–	–	–	–	–	0.55	★	★	1	13	LR2 K0305	**GV2LE05**
0.25	★	★	–	–	–	–	–	–	1	13	LR2 K0306	**GV2LE05**
–	–	–	–	–	–	0.75	★	★	1	13	LR2 K0306	**GV2LE05**
0.37	★	★	0.37	★	★	–	–	–	1	13	LR2 K0306	**GV2LE05**
0.55	★	★	0.55	★	★	1.1	★	★	1.6	22.5	LR2 K0307	**GV2LE06**
–	–	–	0.75	★	★	–	–	–	1.6	22.5	LR2 K0307	**GV2LE06**
0.75	★	★	1.1	★	★	1.5	3	75	2.5	33.5	LR2 K0308	**GV2LE07**
1.1	★	★	–	–	–	–	–	–	2.5	33.5	LR2 K0308	**GV2LE07**
1.5	★	★	1.5	★	★	3	3	75	4	51	LR2 K0310	**GV2LE08**
–	–	–	2.2	★	★	–	–	–	4	51	LR2 K0312	**GV2LE08**
2.2	★	★	3	50	100	4	3	75	6.3	78	LR2 K0312	**GV2LE10**
3	★	★	4	10	100	5.5	3	75	10	138	LR2 K0314	**GV2LE14**
4	★	★	5.5	10	100	–	–	–	10	138	LR2 K0316	**GV2LE14**
–	–	–	–	–	–	7.5	3	75	10	138	LRD 14	**GV2LE14**
–	–	–	–	–	–	9	3	75	14	170	LRD 16	**GV2LE16**
5.5	15	50	7.5	6	75	11	3	75	14	170	LR2 K0321	**GV2LE16**
7.5	15	50	9	6	75	15	3	75	18	223	LRD 21	**GV2LE20**
9	15	40	11	4	75	18.5	3	75	25	327	LRD 22	**GV2LE22**
11	15	40	15	4	75	–	–	–	25	327	LRD 22	**GV2LE22**
15	10	50	18.5	4	75	22	3	75	32	416	LRD 32	**GV2LE32**

(1) As % of Icu.
★) > 100 kA.

Characteristics: pages B6/30 and B6/31
Dimensions: pages B6/43 to B6/45
Schemes: page B6/48

TeSys protection components
Magnetic motor circuit breakers
GV2 L, GV3 L



GV2 L10



GV3 L65

Motor circuit breakers from 0.09 to 30 kW

GV2 L: Control by rotary knob, connection by screw clamp terminals

Standard power ratings of 3-phase motors 50/60 Hz in category AC-3									Magnetic protection rating	Tripping current Id ± 20 %	Use in association with thermal overload relay (class 10 A)	Reference
400/415 V			500 V			690 V						
P	Icu	Ics (1)	P	Icu	Ics (1)	P	Icu	Ics (1)				
kW	kA		kW	kA		kW	kA		A	A		
0.09	★	★	–	–	–	–	–	–	0.4	5	LRD 03	**GV2L03**
0.12	★	★	–	–	–	0.37	★	★	0.63	8	LRD 04	**GV2L04**
0.18	★	★	–	–	–	–	–	–	0.63	8	LRD 04	**GV2L04**
–	–	–	–	–	–	0.55	★	★	1	13	LRD 05	**GV2L05**
0.25	★	★	–	–	–	–	–	–	1	13	LRD 05	**GV2L05**
–	–	–	–	–	–	0.75	★	★	1	13	LRD 06	**GV2L05**
0.37	★	★	0.37	★	★	–	–	–	1	13	LRD 05	**GV2L05**
0.55	★	★	0.55	★	★	1.1	★	★	1.6	22.5	LRD 06	**GV2L06**
–	–	–	0.75	★	★	–	–	–	1.6	22.5	LRD 06	**GV2L06**
0.75	★	★	1.1	★	★	1.5	4	100	2.5	33.5	LRD 07	**GV2L07**
1.1	–	–	–	–	–	–	–	–			LRD 08	**GV2L08**
1.5	★	★	1.5	★	★	3	4	100	4	51	LRD 08	**GV2L08**
–	–	–	–	–	–	–	–	–			LRD 08	**GV2L08**
2.2	★	★	3	★	★	4	4	100	6.3	78	LRD 10	**GV2L10**
3	★	★	4	10	100	5.5	4	100	10	138	LRD 12	**GV2L14**
4	–	–	–	–	–	–	–	–			LRD 14	**GV2L14**
–	–	–	–	–	–	7.5	4	100	10	138	LRD 14	**GV2L14**
–	–	–	–	–	–	9	4	100	14	170	LRD 16	**GV2L16**
5.5	50	50	7.5	10	75	11	4	100	14	170	LRD 16	**GV2L16**
7.5	50	50	9	10	75	15	4	100	18	223	LRD 21	**GV2L20**
9	50	50	11	10	75	18.5	4	100	25	327	LRD 22	**GV2L22**
11	50	50	15	10	75	–	–	–	25	327	LRD 22	**GV2L22**
15	50	50	18.5	10	75	22	4	100	32	416	LRD 32	**GV2L32**

GV3 L: control by rotary knob, connection by EverLink® BTR screw connectors

Standard power ratings of 3-phase motors 50/60 Hz in category AC-3									Magnetic protection rating	Tripping current Id ± 20 %	Use in association with thermal overload relay (class 10 A)	Reference
400/415 V			500 V			690 V						
P	Icu	Ics (1)	P	Icu	Ics (1)	P	Icu	Ics (1)				
kW	kA		kW	kA		kW	kA		A	A		
11	100	100	15	12	50	18.5	6	50	25	350	LRD 325	**GV3L25**
15	100	100	18.5	12	50	22	6	50	32	448	LRD 332	**GV3L32**
18.5	50	100	22	12	50	37	6	50	40	560	LRD 340	**GV3L40**
22	50	100	30	12	50	45	6	50	50	700	LRD 350	**GV3L50**
30	50	100	37	12	50	55	6	50	65	910	LRD 365	**GV3L65**

Connection by EverLink® BTR screw connectors, for assembly with a contactor

To assemble a **GV3 L25** to **L65** circuit breaker with an **LC1 D40A** to **D65A** contactor, it is possible to use the circuit breaker supplied without downstream EverLink® power terminal block. To order this product, add the digit **1** to the end of the references selected above. Example: **GV3 L65** becomes **GV3 L651**.

Connection by lugs

To order these circuit breakers with connection by lugs, add the digit **6** to the end of reference selected above. Example: **GV3 L32** becomes **GV3 L326**.

(1) As % of Icu. Associated current limiter or fuses, where required. See characteristics page B6/33.
★ > 100 kA.

Circuit breakers

Characteristics: pages B6/30 to B6/33
Dimensions: pages B6/43 to B6/47
Schemes: page B6/48

TeSys protection components
Thermal-magnetic motor circuit breakers GV2 ME

TeSys GV

DF526134.tif



GV2 ME10

Motor circuit breakers from 0.06 to 15 kW / 400 V, with screw clamp terminals

GV2 ME with pushbutton control

Standard power ratings of 3-phase motors 50/60 Hz in category AC-3									Setting range of thermal trips (2)	Magnetic tripping current Id ± 20 %	Reference
400/415 V			500 V			690 V					
P	Icu	Ics (1)	P	Icu	Ics (1)	P	Icu	Ics (1)			
kW	kA	%	kW	kA	%	kW	kA	%	A	A	
–	–	–	–	–	–	–	–	–	0.1…0.16	1.5	**GV2ME01**
0.06	★	★	–	–	–	–	–	–	0.16…0.25	2.4	**GV2ME02**
0.09	★	★	–	–	–	–	–	–	0.25…0.40	5	**GV2ME03**
0.12	★	★	–	–	–	**0.37**	★	★	0.40…0.63	8	**GV2ME04**
0.18	★	★	–	–	–	–	–	–			
0.25	★	★	–	–	–	**0.55**	★	★	0.63…1	13	**GV2ME05**
0.37	★	★	**0.37**	★	★	–	–	–	1…16	22.5	**GV2ME06**
0.55	★	★	**0.55**	★	★	**0.75**	★	★			
–	–	–	**0.75**	★	★	**1.1**	★	★			
0.75	★	★	**1.1**	★	★	**1.5**	3	75	1.6…2.5	33.5	**GV2ME07**
1.1	★	★	**1.5**	★	★	**2.2**	3	75	2.5…4	51	**GV2ME08**
1.5	★	★	**2.2**	★	★	**3**	3	75			
2.2	★	★	**3**	50	100	**4**	3	75	4…6.3	78	**GV2ME10**
3	★	★	**4**	10	100	**5.5**	3	75	6…10	138	**GV2ME14**
4	★	★	**5.5**	10	100	**7.5**	3	75			
5.5	15	50	**7.5**	6	75	**9**	3	75	9…14	170	**GV2ME16**
–	–	–	–	–	–	**11**	3	75			
7.5	15	50	**9**	6	75	**15**	3	75	13…18	223	**GV2ME20**
9	15	40	**11**	4	75	**18.5**	3	75	17…23	327	**GV2ME21**
11	15	40	**15**	4	75	–	–	–	20…25	327	**GV2ME22** (3)
15	10	50	**18.5**	4	75	**22**	3	75	24…32	416	**GV2ME32**

Motor circuit breakers from 0.06 to 15 kW / 400 V, with lugs

To order thermal magnetic circuit breakers with connection by lugs, add the digit **6** to the end of reference selected above.
Example: **GV2 ME08** becomes **GV2 ME086**.

Thermal magnetic circuit breakers GV2 ME with built-in auxiliary contact block

With instantaneous auxiliary contact block (composition, see page B6/11):

■ GV AE1, add suffix **AE1TQ** to the motor circuit breaker reference selected above.
Example: **GV2 ME01AE1TQ**.
■ GV AE11, add suffix **AE11TQ** to the motor circuit breaker reference selected above.
Example: **GV2 ME01AE11TQ**.
■ GV AN11, add suffix **AN11TQ** to the motor circuit breaker reference selected above.
Example: **GV2 ME01AN11TQ**.

These circuit breakers with built-in contact block are sold in lots of 20 units in a single pack.

(1) As % of Icu.
(2) The thermal trip setting must be within the range marked on the graduated knob.
*(3) Maximum rating which can be mounted in enclosures **GV2 MC** or **MP**, please consult your Regional Sales Office.*
★ *> 100 kA.*

Characteristics: pages B6/51 to B6/54
Dimensions: pages B6/70 to B6/72
Schemes: page B6/82

TeSys protection components
Thermal-magnetic motor circuit breakers
GV2 ME

TeSys GV

DF526135.tif



GV2 ME●●3

Motor circuit breakers from 0.06 to 11 kW, with spring terminal connections

GV2 ME (1) with pushbutton control

Standard power ratings of 3-phase motors 50/60 Hz in category AC-3						Setting range of thermal trips (3)	Magnetic tripping current Id ± 20 %	Reference
400/415 V			500 V					
P	Icu	Ics (2)	P	Icu	Ics (2)			
kW	kA	%	kW	kA	%	A	A	
–	–	–	–	–	–	0.1…0.16	1.5	**GV2ME013**
0.06	★	★	–	–	–	0.16…0.25	2.4	**GV2ME023**
0.09	★	★	–	–	–	0.25…0.40	5	**GV2ME033**
0.12 **0.18**	★ ★	★ ★	–	–	–	0.40…0.63	8	**GV2ME043**
0.25 **0.37**	★ ★	★ ★	**0.37**	★	★	0.63…1	13	**GV2ME053**
0.37 **0.55**	★ ★	★ ★	**0.37** **0.55** **0.75**	★ ★ ★	★ ★ ★	1…1.6	22.5	**GV2ME063**
0.75	★	★	**1.1**	★	★	1.6…2.5	33.5	**GV2ME073**
1.1 **1.5**	★ ★	★ ★	**1.5** **2.2**	★ ★	★ ★	2.5…4	51	**GV2ME083**
2.2	★	★	**3**	50	100	4…6.3	78	**GV2ME103**
3 **4**	★ ★	★ ★	**4** **5.5**	10 10	100 100	6…10	138	**GV2ME143**
5.5	15	50	**7.5**	6	75	9…14	170	**GV2ME163**
7.5	15	50	**9**	6	75	13…18	223	**GV2ME203**
9 **11**	15 15	40 40	**11**	4	75	17…23	327	**GV2ME213**
11	15	40	**15**	4	75	20…25	327	**GV2ME223**

DF533898.eps

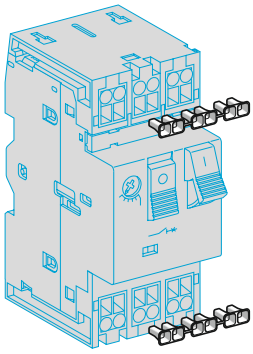

LA9 D99

Contact blocks

Description	Mounting	Maximum number	Type of contacts	Sold in lots of	Unit reference
Instantaneous auxiliary contacts	Front	1	N/O + N/C	10	**GVAE113**
			N/O + N/O	10	**GVAE203**
	LH side	2	N/O + N/C	1	**GVAN113**
			N/O + N/O	1	**GVAN203**

Accessory

Description	Application	Sold in lots of	Unit reference
Cable end reducer	For connection of conductors from 1 to 1.5 mm²	20	**LA9D99**

*(1) For connection of conductors from 1 to 1.5 mm², the use of an **LA9 D99** cable end reducer is recommended.*
*(2) Maximum rating which can be mounted in enclosures **GV2 MC** or **MP**, please consult your Regional Sales Office*
(3) The thermal trip setting must be within the range marked on the graduated knob.
★ > 100 kA.

Characteristics: pages B6/51 to B6/54
Dimensions: pages B6/70 to B6/72
Schemes: page B6/82

TeSys protection components
Thermal-magnetic motor circuit breakers GV2 P, GV3 P and GV3 ME80

TeSys GV

DF526137.tif



GV2 P10

DF526139.tif



GV3 P65

DF526140.tif



GV3 P651

Motor circuit breakers from 0.06 to 37 kW / 400 V

Standard power ratings of 3-phase motors 50/60 Hz in category AC-3									Setting range of thermal trips (2)	Magnetic tripping current Id ± 20 %	Reference
400/415 V			500 V			690 V					
P	Icu	Ics (1)	P	Icu	Ics (1)	P	Icu	Ics (1)			
kW	kA	%	kW	kA	%	kW	kA	%	A	A	
GV2 P: control by rotary knob											
Screw clamp terminals											
–	–	–	–	–	–	–	–	–	0.1…0.16	1.5	**GV2P01**
0.06	★	★	–	–	–	–	–	–	0.16…0.25	2.4	**GV2P02**
0.09	★	★	–	–	–	–	–	–	0.25…0.40	5	**GV2P03**
0.12	★	★	–	–	–	**0.37**	★	★	0.40…0.63	8	**GV2P04**
0.18	★	★	–	–	–	**–**	–	–			
0.25	★	★	–	–	–	**0.55**	★	★	0.63…1	13	**GV2P05**
0.37	★	★	**0.37**	★	★	**–**	–	–	1…1.6	22.5	**GV2P06**
0.55	★	★	**0.55**	★	★	**0.75**	★	★			
0.75	★	★	**1.1**	★	★	**1.5**	8	100	1.6…2.5	33.5	**GV2P07**
1.1	★	★	**1.5**	★	★	**2.2**	8	100	2.5…4	51	**GV2P08**
2.2	★	★	**3**	★	★	**4**	6	100	4…6.3	78	**GV2P10**
3	★	★	**5**	50	100	**5.5**	6	100	6…10	138	**GV2P14**
5.5	★	★	**7.5**	42	75	**9**	6	100	9…14	170	**GV2P16**
–	–	–	**–**	–	–	**11**	6	100			
7.5	50	50	**9**	10	75	**15**	4	100	13…18	223	**GV2P20**
9	50	50	**11**	10	75	**18.5**	4	100	17…23	327	**GV2P21**
11	50	50	**15**	10	75	**–**	–	–	20…25	327	**GV2P22**
15	50	50	**18.5**	10	75	**22**	4	100	24…32	416	**GV2P32**
GV3 P: control by rotary knob											
Connection by EverLink® BTR screw connectors (3)											
5.5	100	100	**7.5**	12	50	**11**	6	50	9…13	182	**GV3P13**
7.5	100	100	**9**	12	50	**15**	6	50	12…18	252	**GV3P18**
11	100	100	**15**	12	50	**18.5**	6	50	17…25	350	**GV3P25**
15	100	100	**18.5**	12	50	**22**	6	50	23…32	448	**GV3P32**
18.5	50	100	**22**	12	50	**37**	6	50	30…40	560	**GV3P40**
22	50	100	**30**	12	50	**45**	6	50	37…50	700	**GV3P50**
30	50	100	**45**	12	50	**55**	6	50	48…65	910	**GV3P65**

Connection by EverLink® BTR screw connectors, for assembly with a contactor

To assemble a **GV3 P13** to **P65** circuit breaker with an **LC1 D40A** to **D65A** contactor, it is possible to use the circuit breaker supplied without downstream EverLink® power terminal block. To order this product, add the digit **1** to the end of the references selected above. Example: **GV3 P65** becomes **GV3 P651**.

Connection by lugs

To order thermal magnetic circuit breakers with connection by lugs, add the digit **6** to the end of reference selected above. Example: **GV3 P18** becomes **GV3 P186**.

GV3 ME80: pushbutton control, screw clamp terminals

37	15	50	**45**	4	100	**55**	2	100	56…80	**GV3ME80** (4)

Motor circuit breakers up to 50 hp / 600 V, UL 508 type E

GV2 (5)

To obtain a GV2 **P** motor circuit breaker, UL 508 type E, use the following with the circuit breaker:
- a "Large Spacing" adapter **GV2 GH7.**

GV3 (6)

To obtain a motor-circuit breaker GV3 **P**, UL 508 type E, use the following with the circuit breaker:
- a "Large Spacing" cover **GV3 G66**,
- a short-circuit signalling contact **GV AM11**.

GV3 with connection by lugs (6)

To obtain a motor-circuit breaker GV3 **P**, UL 508 type E, with connection by lugs, add the digit **6** to the end of reference selected above and use the following with the circuit breaker:
- two IP 20 covers **LAD 96570**,
- a short-circuit signalling contact **GV AM11**.

(1) As % of Icu.
(2) The thermal trip setting must be within the range marked on the graduated knob.
(3) BTR screws: hexagon socket head. Require use of an insulated Allen key, in compliance with local wiring regulations.
(4) Recommended for use in association with a contactor.
(5) Accessory: see page B6/13.
(6) Accessories: see page B6/17.
★ > 100 kA.

Characteristics: pages B6/51, B6/52 and B6/55
Dimensions: pages B6/70 to B6/78
Schemes: pages B6/82 and B6/83

TeSys protection components
Thermal-magnetic motor circuit breakers
GV7 R

DF526138.tif



GV7 RE40

DF526141.tif



GV7 RS220

Thermal-magnetic circuit breakers GV7 R with screw clamp terminals up to 110 kW

Control by rocker lever

Standard power ratings of 3-phase motors 50/60 Hz in category AC-3									Setting range of thermal trips	Reference	Weight
400/415 V			500 V			660/690 V					
P	Icu	Ics (1)	P	Icu	Ics (1)	P	Icu	Ics (1)			
kW	kA	%	kW	kA	%	kW	kA	%	A		kg
7.5 **9**	36 36	100 100	**9** **11**	18 18	100 100	**11** **15**	8 8	100 100	12…20	**GV7RE20**	2.010
7.5 **9**	70 70	100 100	**9** **11**	50 50	100 100	**11** **15**	10 10	100 100	12…20	**GV7RS20**	2.010
9 **11**	36 36	100 100	**11** **15**	18 18	100 100	**15** **18.5**	8 8	100 100	15…25	**GV7RE25**	2.010
9 **11**	70 70	100 100	**11** **15**	50 50	100 100	**15** **18.5**	10 10	100 100	15…25	**GV7RS25**	2.010
18.5	36	100	**18.5** **22**	18 18	100 100	**22**	8	100	25…40	**GV7RE40**	2.010
18.5	70	100	**18.5**	50	100	**22**	10	100	25…40	**GV7RS40**	2.010
22	36	100	**30**	18	100	**30**	8	100	30…50	**GV7RE50**	2.015
22	70	100	**30**	50	100	**30**	10	100	30…50	**GV7RS50**	2.015
37	36	100	**45** **55**	18 18	100 100	**55**	8	100	48…80	**GV7RE80**	2.040
37	70	100	**45** **55**	50 50	100 100	**55**	10	100	48…80	**GV7RS80**	2.040
45	36	100	**–**	18	100	**75**	8	100	60…100	**GV7RE100**	2.040
45	70	100	**–**	50	100	**75**	10	100	60…100	**GV7RS100**	2.040
55 **75**	35 35	100 100	**75** **90**	30 30	100 100	**90** **110**	8 8	100 100	90…150	**GV7RE150**	2.020
55 **75**	70 70	100 100	**75** **90**	50 50	100 100	**90** **110**	10 10	100 100	90…150	**GV7RS150**	2.020
90 **110**	35 35	100 100	**110** **132** **160**	30 30 30	100 100 100	**160** **200**	8 8	100 100	132…220	**GV7RE220**	2.350
90 **110**	70 70	100 100	**110** **132** **160**	50 50 50	100 100 100	**160** **200**	10 10	100 100	132…220	**GV7RS220**	2.350

(1) As % of Icu.

Circuit breakers

Characteristics:
pages B6/51, B6/52 and B6/56

Dimensions:
pages B6/79 to B6/81

Schemes:
page B6/83

TeSys protection components
Thermal-magnetic circuit breakers
GV2 RT

PB111883.eps



GV2 RT

For motors with high current peak on starting

Control by rocker lever

Standard power ratings of 3-phase motors 50/60 Hz in category AC-3					Setting range of thermal trips (1)	Magnetic tripping current Id ± 20 %	Reference
220/ 230 V	400/ 415 V	440 V	500 V	690 V			
kW	kW	kW	kW	kW	A	A	
0.06	0.09	0.09 0.12	–	–	0.25…0.40	8	**GV2RT03**
–	0.12 0.18	0.18	–	0.37	0.40…0.63	13	**GV2RT04**
0.09 0.12	0.25 0.37	0.25 0.37	0.37	0.55	0.63…1	22	**GV2RT05**
0.18 0.25	0.37 0.55	0.37 0.55	0.37 0.55 0.75	0.75 1.1	1…1.6	33	**GV2RT06**
0.37	0.75	0.75 1.1	1.1	1.5	1.6…2.5	51	**GV2RT07**
0.55 0.75	1.1 1.5	1.5	1.5 2.2	2.2 3	2.5…4	78	**GV2RT08**
1.1	2.2	2.2 3	3	4	4…6.3	138	**GV2RT10**
1.5 2.2	3 4	4	4 5.5	5.5 7.5	6…10	200	**GV2RT14**
2.2 3	5.5	5.5 7.5	7.5	9 11	9…14	280	**GV2RT16**
4	7.5	7.5 9	9	15	13…18	400	**GV2RT20**
5.5	9 11	11	11	18.5	17…23	400	**GV2RT21**

(1) The thermal trip setting must be within the range marked on the graduated knob.

Characteristics: page B6/51
Dimensions: page B6/75
Schemes: page B6/82

TeSys protection components
Thermal-magnetic circuit breakers
GV2 RT

TeSys GV

PB111883.eps



GV2 RT

For primaries of 3-phase transformers

Control by rocker lever

Standard power ratings					Setting range of thermal trips (1)	Magnetic tripping current Id ± 20 %	Reference
230/240 V	400/415 V	440 V	500 V	690 V			
kW	kW	kW	kW	kW	A	A	
–	–	–	–	–	0.25…0.40	8	**GV2RT03**
–	–	–	–	–	0.40…0.63	13	**GV2RT04**
–	–	0.63	0.63	1	0.63…1	22	**GV2RT05**
0.4	0.63	1	1	–	1…1.6	33	**GV2RT06**
0.63	1	–	1.6	1.6 2	1.6…2.5	51	**GV2RT07**
1	1.6 2	1.6 2	2 2.5	2.5	2.5…4	78	**GV2RT08**
1.6 2	2.5	2.5 4	4	4 5 6.3	4…6.3	138	**GV2RT10**
2.5	4 5	5	5 6.3	–	6…10	200	**GV2RT14**
4	6.3	6.3	–	10 12.5	9…14	280	**GV2RT16**
5 6.3	10	10	10 12.5	10	13…18	400	**GV2RT20**

Accessory (2)

Description	Reference
Padlockable external operator (IP 54) black handle, blue legend plate	**GV2AP03**

(1) The thermal trip setting must be within the range marked on the graduated knob.

(2) Other accessories such as mounting, cabling and marking accessories are identical to those used for GV2 ME motor circuit breakers, see page B6/13.

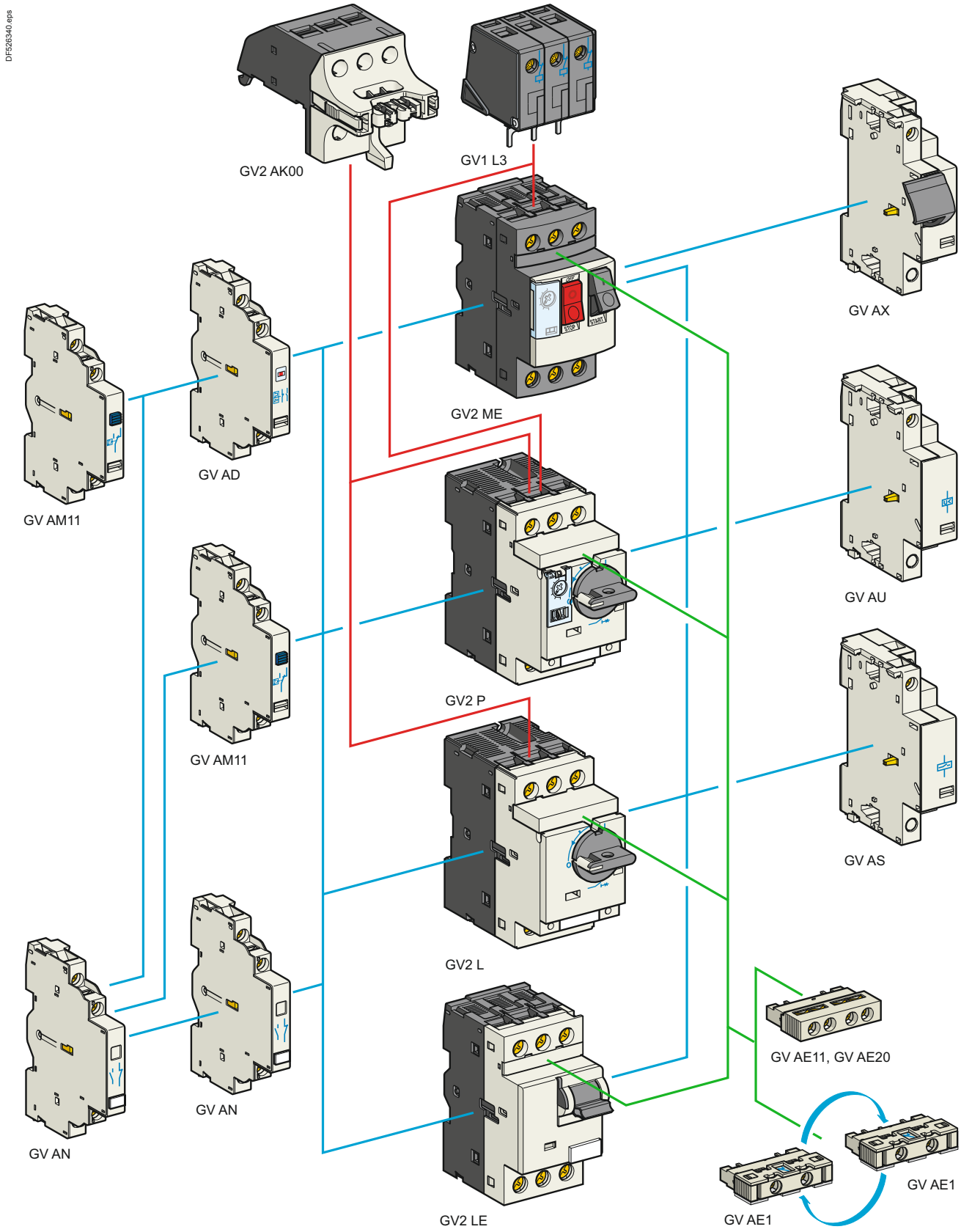
DF526340.eps
GV2 AK00
GV1 L3
GV AX
GV2 ME
GV AD
GV AM11
GV AU
GV2 P
GV AM11
GV AS
GV2 L
GV AE11, GV AE20
GV AN
GV AN
GV AE1
GV AE1
GV2 LE

TeSys protection components
Thermal-magnetic and magnetic motor circuit breakers GV2 with screw clamp connections
Add-on blocks and accessories

Contact blocks

Description	Mounting	Maximum number	Type of contacts		Sold in lots of	Unit reference
Instantaneous auxiliary contacts	Front (1)	1	N/O or N/C (2)		10	**GVAE1**
			N/O + N/C		10	**GVAE11**
			N/O + N/O		10	**GVAE20**
	Side (LH)	2	N/O + N/C		1	**GVAN11**
			N/O + N/O		1	**GVAN20**
Fault signalling contact + instantaneous auxiliary contact	Side (3) (LH)	1	N/O (fault)	+ N/O	1	**GVAD1010**
				+ N/C	1	**GVAD1001**
			N/C (fault)	+ N/O	1	**GVAD0110**
				+ N/C	1	**GVAD0101**
Short-circuit signalling contact	Side (LH)	1	C/O common point		1	**GVAM11**

Electric trips

Mounting	Voltage		Reference
Undervoltage or shunt trips (4)			
Side (1 block on RH side of circuit breaker)	24 V	50 Hz	**GVA●025**
		60 Hz	**GVA●026**
	48 V	50 Hz	**GVA●055**
		60 Hz	**GVA●056**
	100 V	50 Hz	**GVA●107**
	100…110 V	60 Hz	**GVA●107**
	110…115 V	50 Hz	**GVA●115**
		60 Hz	**GVA●116**
	120…127 V	50 Hz	**GVA●125**
	127 V	60 Hz	**GVA●115**
	200 V	50 Hz	**GVA●207**
	200…220 V	60 Hz	**GVA●207**
	220…240 V	50 Hz	**GVA●225**
		60 Hz	**GVA●226**
	380…400 V	50 Hz	**GVA●385**
		60 Hz	**GVA●386**
	415…440 V	50 Hz	**GVA●415**
	415 V	60 Hz	**GVA●416**
	440 V	60 Hz	**GVA●385**
	480 V	60 Hz	**GVA●415**
	500 V	50 Hz	**GVA●505**
	600 V	60 Hz	**GVA●505**
Undervoltage trip, INRS (can only be mounted on GV2 ME) Safety device for dangerous machines conforming to INRS and VDE 0113			
Side (1 block on RH side of circuit breaker GV2 ME)	110…115 V	50 Hz	**GVAX115**
		60 Hz	**GVAX116**
	127 V	60 Hz	**GVAX115**
	220…240 V	50 Hz	**GVAX225**
		60 Hz	**GVAX226**
	380…400 V	50 Hz	**GVAX385**
		60 Hz	**GVAX386**
	415…440 V	50 Hz	**GVAX415**
	440 V	60 Hz	**GVAX385**

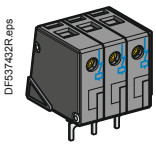

GV1L3

Add-on contact blocks

Description	Mounting	Maximum number	Reference
Visible isolation block (5)	Front (1)	1	**GV2AK00** (6)
Limiters	At top (GV2 ME and GV2 P)	1	**GV1L3**
	Independent	1	**LA9LB920**

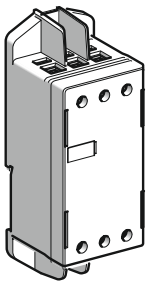

LA9LB920

*(1) Mounting of a **GV AE** contact block or a **GV2 AK00** visible isolation block on **GV2 P** and **GV2 L**.*
(2) Choice of N/C or N/O contact operation, depending on which way round the reversible block is mounted.
*(3) The **GV AD** is always mounted next to the circuit breaker.*
*(4) To order an undervoltage trip: replace the dot (●) in the reference with a **U**, example: **GV AU025**.*
*To order a shunt trip: replace the dot (●) in the reference with an **S**, example: **GV AS025**.*
*(5) Visible isolation of the 3 poles upstream of circuit breaker **GV2 P** and **GV2 L**.*
*Visible isolation block **GV2 AK00** cannot be used with motor circuit breakers GV2 P32 and GV2 L32 (Ith max = 25 A).*
(6) Ie Max = 32 A.

Characteristics: pages B6/89 and B6/93

Dimensions, schemes: pages B6/70 to B6/82

DB126629.eps

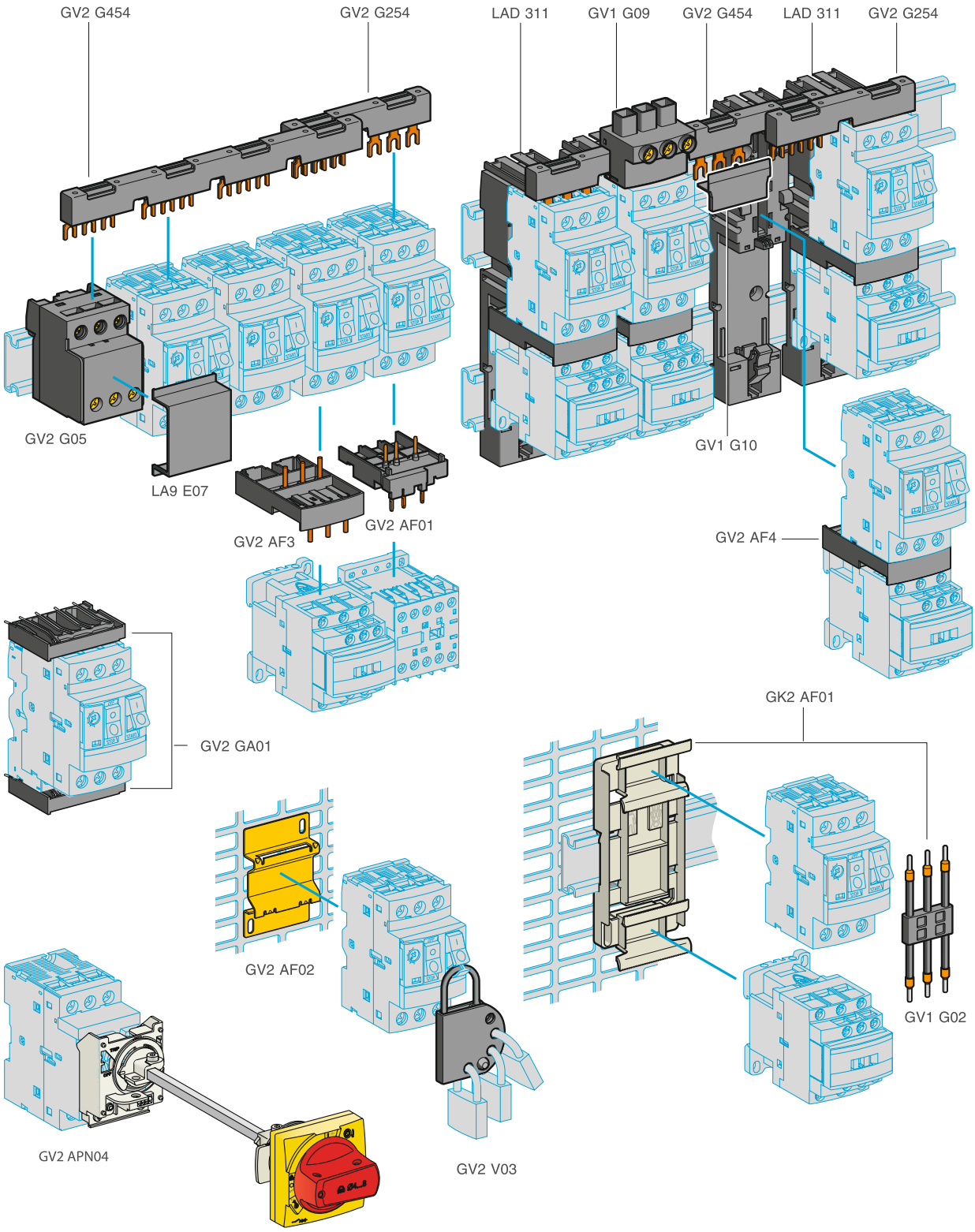

TeSys protection components
Thermal-magnetic and magnetic motor circuit breakers GV2 with screw clamp connections
Accessories

Accessories

Description	Application	Sold in lots of	Unit reference
Adapter plates	For mounting a GV2 ME or GV2 LE by screw fixing	10	**GV2AF02**
	For mounting a GV2 P and contactor LC1 D09…D38 with front faces aligned	1	**LAD311**
Height compensation plate	7.5 mm	10	**GV1F03**
Combination blocks	Between GV2 and contactor LC1 K or LP1 K	10	**GV2AF01**
	Between GV2 and contactor LC1 D09…D38	10	**GV2AF3**
	Between GV2 mounted on LAD 311 and contactor LC1 D09…D38	10	**GV2AF4**
Motor starter adapter plate	With 3-pole connection for mounting a GV2 and a contactor LC1 D09…D25	1	**GK2AF01**

Description	Application	Pitch	Reference
		mm	
Sets of 3-pole 63 A busbars	2 tap-offs	45	**GV2G245**
		54	**GV2G254**
		72	**GV2G272**
	3 tap-offs	45	**GV2G345**
		54	**GV2G354**
	4 tap-offs	45	**GV2G445**
		54	**GV2G454**
		72	**GV2G472**
	5 tap-offs	54	**GV2G554**

Description	Application	Sold in lots of	Unit reference
Protective end cover	For unused busbar outlets	5	**GV1G10**
Terminal block for supply to one or more GV2 G busbar sets	Connection from the top	1	**GV1G09**
	Can be fitted with current limiter GV1 L3 (GV2 ME and GV2 P)	1	**GV2G05**
Cover for terminal block	For mounting in modular panels	10	**LA9E07**
Flexible 3-pole connection for connecting a GV2 to a contactor LC1-D09…D25	Centre distance between mounting rails: 100…120 mm	10	**GV1G02**
Set of connections upstream/downstream	For connecting GV2 ME to a printed circuit board	10	**GV2GA01**
"Large Spacing" adapter UL 508 type E	For GV2 P●●H7 (except 32 A)	1	**GV2GH7**
Clip-in marker holders (supplied with each circuit breaker)	For GV2 P, GV2 L, GV2 LE and GV2 RT (8 x 22 mm)	100	**LA9D92**

DB417942.eps

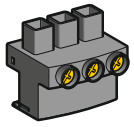

GV1 G09

Dimensions, schemes:
pages B6/70 to B6/82

TeSys protection components
Thermal-magnetic and magnetic motor circuit breakers GV2 with screw clamp connections

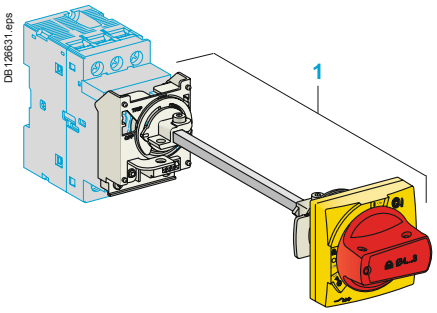

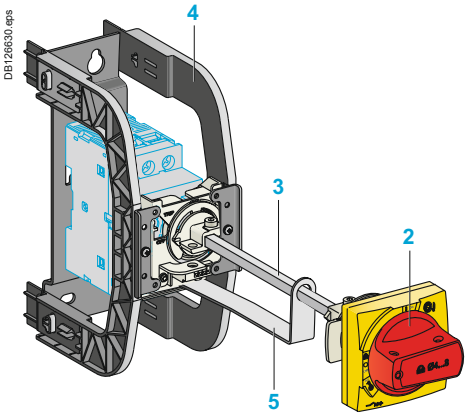

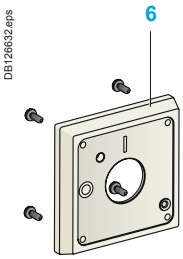



Extended Rotary Handle

Allows a circuit breaker or a starter-controller installed in back of an enclosure to be operated from the front of the enclosure.
A rotary handle can be black or red/yellow, IP54 or IP65. It includes a function for locking the circuit breaker or the starter in the O (Off) or I (On) position (depending of the type of rotary handle) by means of up to 3 padlocks with a shank diameter of 4 to 8 mm. The extended shaft must be adjusted to use in different size enclosures. The IP54 rotary handle is fixed with a nut (Ø22) to make easier the assembling. The new Laser Square tool brings the accuracy to align the circuit breaker and the rotary handle.

Padlockable external operators for GV2P and GV2L

Description

1 Kit handle + mounting system
2 Universal handle
3 Shaft
4 Bracket
5 Shaft support plate for deep enclosure
6 Retrofit accessory
7 Laser Square accessory

Kit handle + mounting system			
Description		**Item**	**Reference**
For GV2 P/L	Black handle, front plate, with trip status, IP 54	1	**GV2APN01**
	Red handle, front plate, with trip status, IP 54	1	**GV2APN02**
	Red handle, front plate, without trip status, IP 65	1	**GV2APN04**
For GV2 LE	Padlocking in “On” and “Off” position Black handle, blue front plate, IP 54	-	**GV2AP03**
Universal handle			
For GV2 P/L	Black handle, IP 54	2	**GVAPB54**
	Red handle, IP 54	2	**GVAPR54**
	Red handle, IP 65	2	**GVAPR65**
Shaft			
For GV2 P/L	L = 315 mm	3	**GVAPA1**
Bracket			
For GV2 P/L		4	**GVAPH02**
Shaft support plate for deep enclosure			
For GV2 P/L	Depth ≥ 250 mm	5	**GVAPK11**
Retrofit accessory			
For GV2 P/L		6	**GVAPP1**
Laser Square accessory			
For GV2 P/L		7	**GVAPL01**

Sticker		Sold in lots of		
Warning label	For French	10	-	**GVAPSFR**
	For English	10	-	**GVAPSEN**
	For German	10	-	**GVAPSDE**
	For Spanish	10	-	**GVAPSES**
	For Chinese	10	-	**GVAPSCN**
	For Portuguese	10	-	**GVAPSPT**
	For Russian	10	-	**GVAPSRU**
	For Italian	10	-	**GVAPSIT**

Padlocking device

Description		Reference
For all GV2 device	For use with up to 4 padlocks, Ø6 mm shank max. (padlocks not included)	**GV2V03**

DB126635.eps

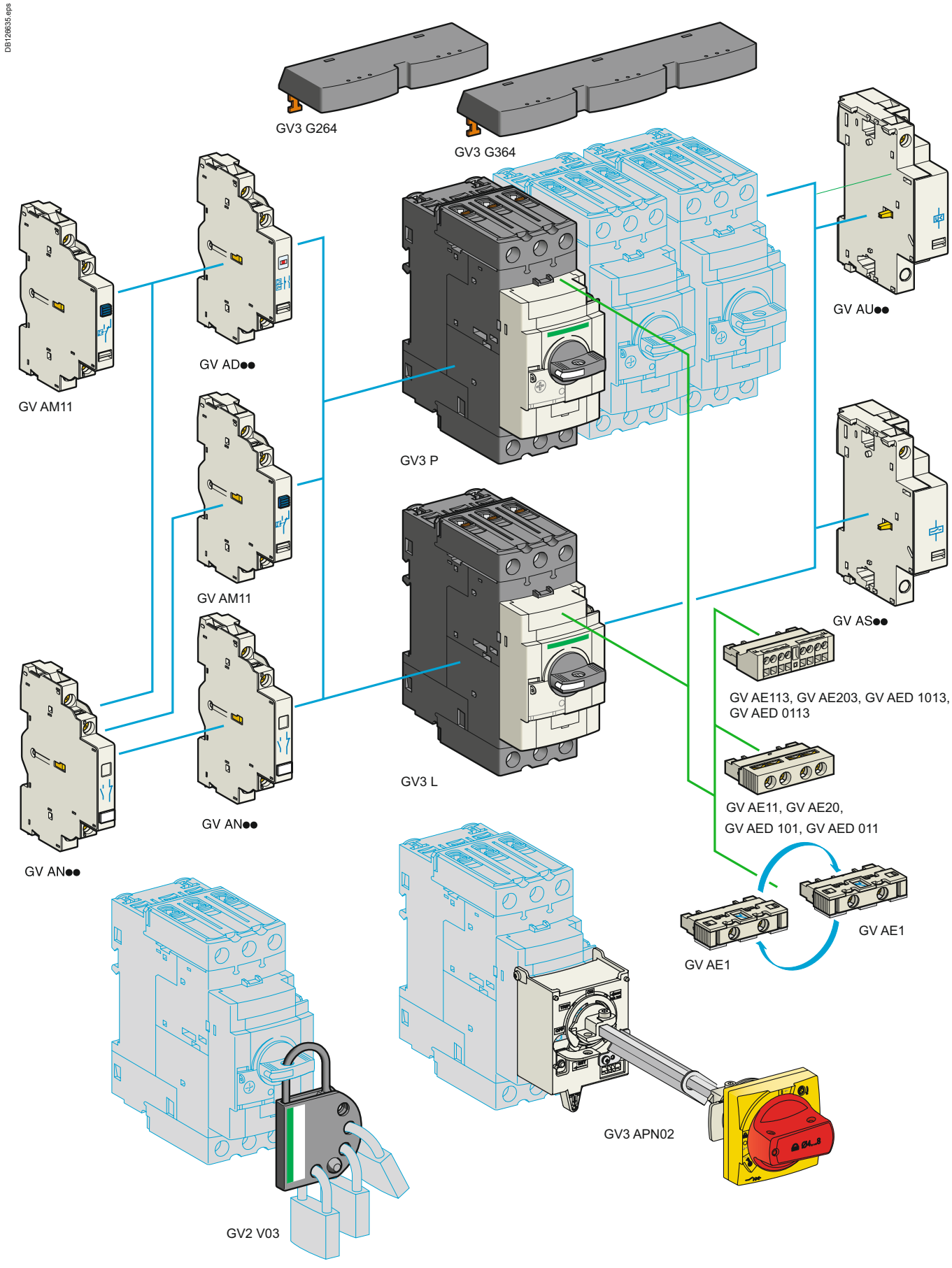

Schneider Electric

TeSys protection components
Thermal-magnetic motor circuit breakers GV3 P and GV3 L
Add-on blocks and accessories

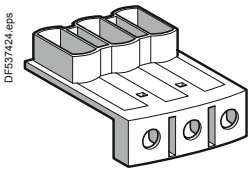

GV3 G66

Contact blocks

Description	Mounting	Maximum number	Type of contacts		Sold in lots of	Unit reference
Instantaneous auxiliary contacts	Front	1	N/O or N/C (1)		10	**GVAE1**
			N/O + N/C		10	**GVAE11** (2)
			N/O + N/O		10	**GVAE20** (2)
	Side (LH)	2	N/O + N/C		1	**GVAN11** (2)
			N/O + N/O		1	**GVAN20** (2)
Fault signalling contact + instantaneous auxiliary contact	Front	1	N/O (fault)	+ N/O	1	**GVAED101** (2)
			N/O (fault)	+ N/C	1	**GVAED011** (2)
	Side (3) (LH)	1	N/O (fault)	+ N/O	1	**GVAD1010**
				+ N/C	1	**GVAD1001**
			N/C (fault)	+ N/O	1	**GVAD0110**
				+ N/C	1	**GVAD0101**
Short-circuit signalling contact	Side (LH)	1	C/O common point		1	**GVAM11**

Electric trips - undervoltage or shunt (4)

Mounting	Voltage		Reference
Side (1 block on RH side of circuit breaker)	24 V	50 Hz	**GVA●025**
		60 Hz	**GVA●026**
	48 V	50 Hz	**GVA●055**
		60 Hz	**GVA●056**
	100	50 Hz	**GVA●107**
	100…110 V	60 Hz	**GVA●107**
	110…115 V	50 Hz	**GVA●115**
		60 Hz	**GVA●116**
	120…127 V	50 Hz	**GVA●125**
	127 V	60 Hz	**GVA●115**
	200 V	50 Hz	**GVA●207**
	200…220 V	60 Hz	**GVA●207**
	220…240 V	50 Hz	**GVA●225**
		60 Hz	**GVA●226**
	380…400 V	50 Hz	**GVA●385**
		60 Hz	**GVA●386**
	415…440 V	50 Hz	**GVA●415**
	415 V	60 Hz	**GVA●416**
	440 V	60 Hz	**GVA●385**
	480 V	60 Hz	**GVA●415**
	500 V	50 Hz	**GVA●505**
	600 V	60 Hz	**GVA●505**

Accessories

Description			Reference
Sets of 3-pole 115 A busbars Pitch: 64 mm	2 tap-off	GV3 P●● and GV3 L●●	**GV3G264**
	3 tap-off	GV3 P●● and GV3 L●●	**GV3G364**
Cover "Large Spacing" UL 508 type E (Only one cover required on supply side)		GV3 P●●	**GV3G66**

(1) Choice of N/C or N/O contact operation, depending on which way round the reversible block is mounted.
*(2) Contact blocks available in version with spring terminal connections. Add a figure **3** at the end of the references selected above. Example: **GVAED101** becomes **GVAED1013**.*
*(3) The **GVAD●●** is always mounted next to the circuit breaker.*
*(4) To order an undervoltage trip: replace the dot (●) in the reference with a **U**, example: **GVAU025**. To order a shunt trip: replace the dot (●) in the reference with an **S**, example: **GVAS025**.*

TeSys protection components
Thermal-magnetic motor circuit breakers GV3 P and GV3 L

TeSys GV

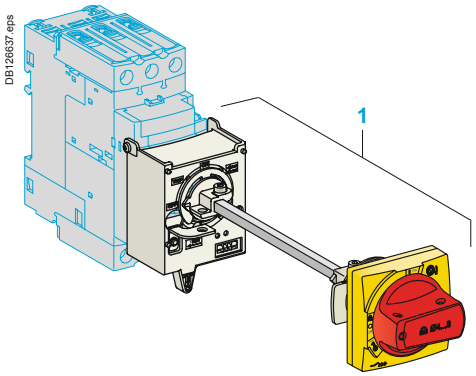

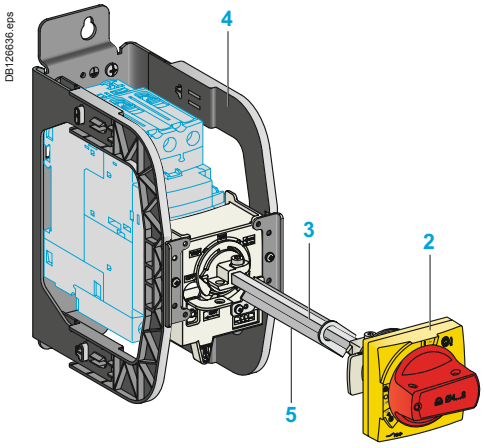

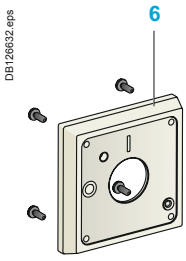



Extended Rotary Handle

Allows a circuit breaker or a starter-controller installed in back of an enclosure to be operated from the front of the enclosure.
A rotary handle can be black or red/yellow, IP54 or IP65. It includes a function for locking the circuit breaker or the starter in the O (Off) or I (On) position (depending of the type of rotary handle) by means of up to 3 padlocks with a shank diameter of 4 to 8 mm. The extended shaft must be adjusted to use in different size enclosures. The IP54 rotary handle is fixed with a nut (Ø22) to make easier the assembling. The new Laser Square tool brings the accurency to align the circuit breaker and the rotary handle.

Padlockable external operators for GV3 and GV3L

Description

1 Kit handle + mounting system
2 Universal handle
3 Shaft
4 Bracket
5 Shaft support plate for deep enclosure
6 Retrofit accessory
7 Laser Square accessory

Kit handle + mounting system

Description		Item	Reference
For GV3 P/L	Black handle, front plate, with trip status, IP 54	1	GV3APN01
	Red handle, front plate, with trip status, IP 54	1	GV3APN02
	Red handle, front plate, without trip status, IP 65	1	GV3APN04
Universal handle			
For GV3 P/L	Black handle, IP 54	2	GVAPB54
	Red handle, IP 54	2	GVAPR54
	Red handle, IP 65	2	GVAPR65
Shaft			
For GV3 P/L	L = 315 mm	3	GVAPA1
Bracket			
For GV3 P/L		4	GVAPH03
Shaft support plate for deep enclosure			
For GV3 P/L	Depth ≥ 300 mm	5	GVAPK12
Retrofit accessory			
For GV3 P/L		6	GVAPP1
Laser Square accessory			
For GV3 P/L		7	GVAPL01

Sticker		Sold in lots of		
Warning label	For French	10	-	GVAPSFR
	For English	10	-	GVAPSEN
	For German	10	-	GVAPSDE
	For Spanish	10	-	GVAPSES
	For Chinese	10	-	GVAPSCN
	For Portuguese	10	-	GVAPSPT
	For Russian	10	-	GVAPSRU
	For Italian	10	-	GVAPSIT

DF526342.eps

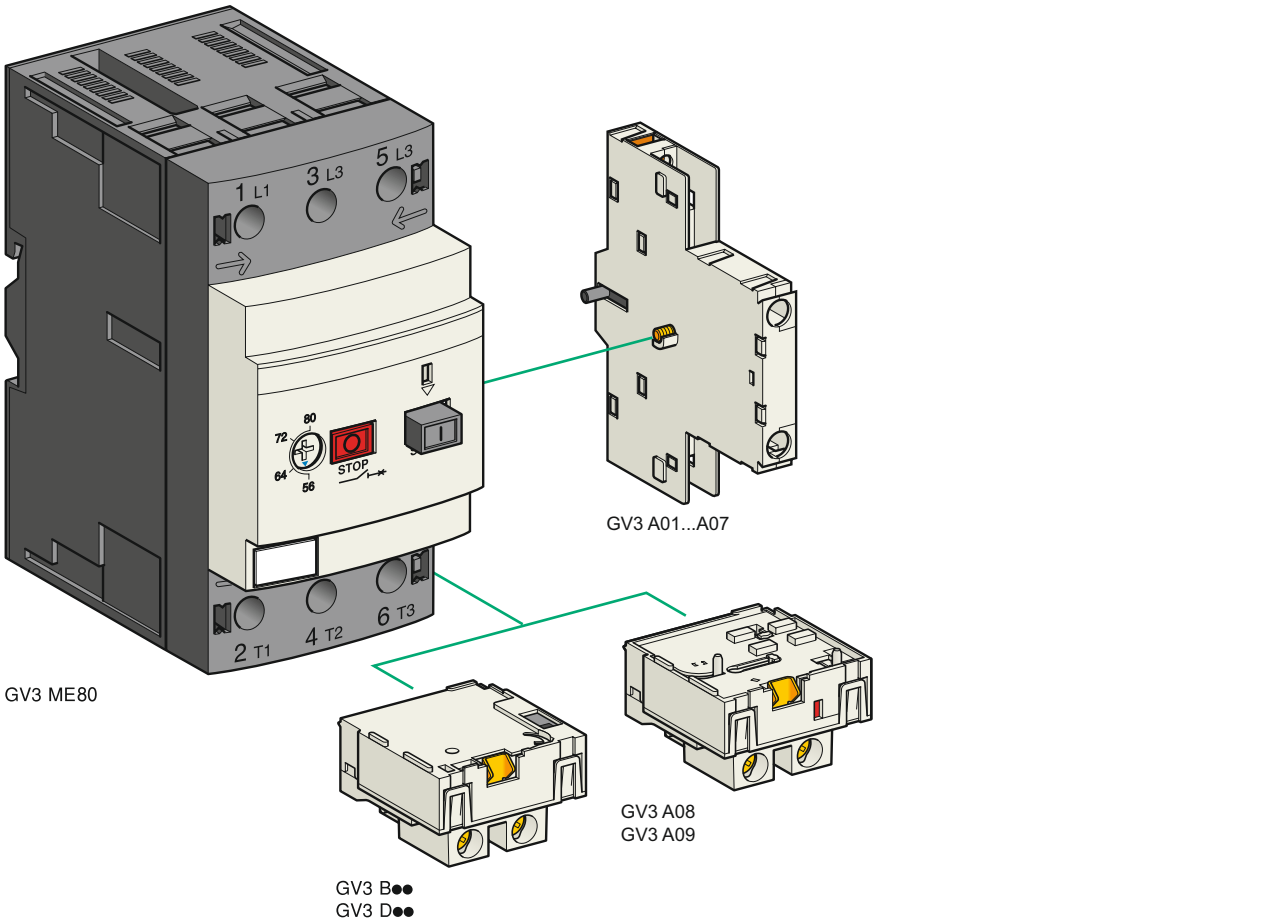

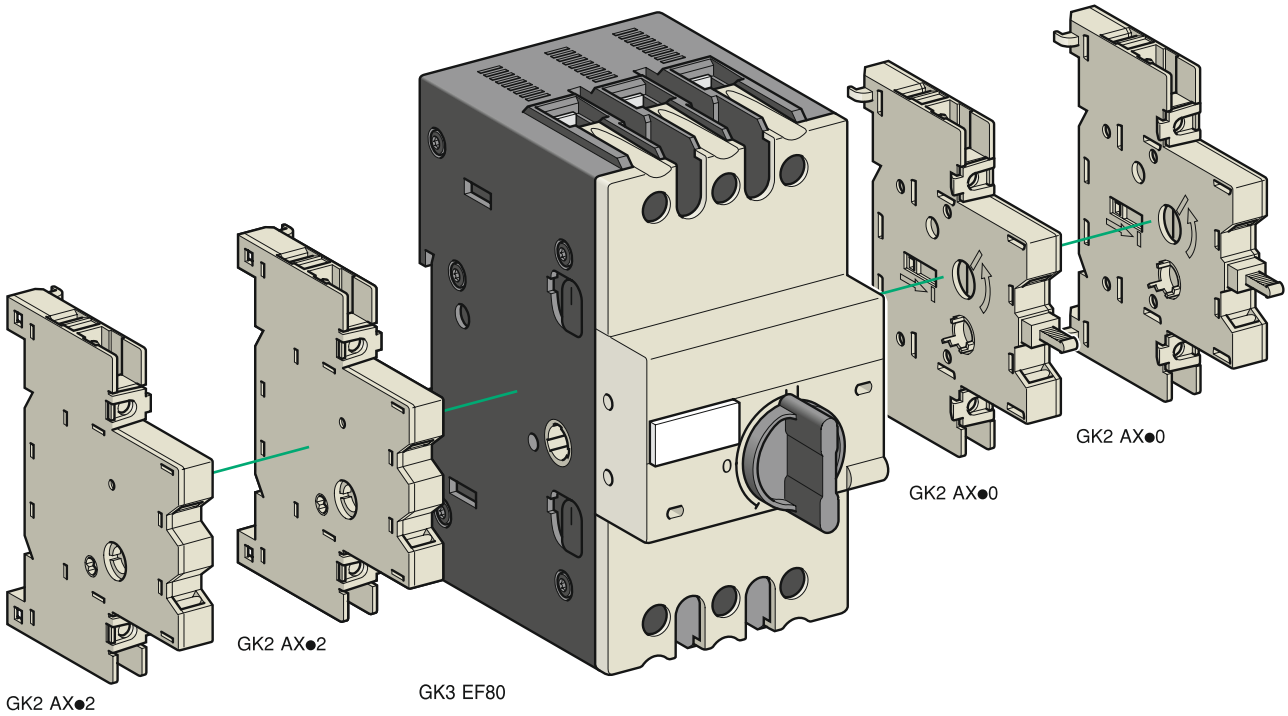

TeSys protection components
Motor circuit breakers GV3 ME80
Add-on blocks and accessories

For thermal-magnetic motor circuit breakers GV3 ME80

Contact blocks

Description	Type of standard early break contacts	Reference
Instantaneous auxiliary contact blocks (1 per circuit breaker)	N/C + N/O	**GV3A01**
	N/O + N/O	**GV3A02**
	N/C + N/O + N/O	**GV3A03**
	N/O + N/O + N/O	**GV3A05**
	N/O + N/O + 2 volt-free terminals	**GV3A06**
	N/C + N/O + 2 volt-free terminals	**GV3A07**
Fault signalling contacts (1)	N/C	**GV3A08**
	N/O	**GV3A09**

Electric trips

Description	Voltages		Reference
	50 Hz	60 Hz	
Undervoltage trips (1)	110, 120, 127 V	120, 127 V	**GV3B11**
	220, 240 V	277 V	**GV3B22**
	380, 415 V	440 V, 480 V	**GV3B38**
Shunt trips (1)	110, 120, 127 V	120, 127 V	**GV3D11**
	220, 240 V	277 V	**GV3D22**
	380, 415 V	440 V, 480 V	**GV3D38**

Accessory

Description	Sold in lots of	Unit reference
Padlocking device, for locking the Start button (on open-mounted product)	5	**GV1V02**

*(1) 1 voltage trip **OR** 1 fault signalling contact to be fitted inside the motor circuit breaker.*

Other versions

24 to 690 V, 50 or 60 Hz voltage trips for circuit breakers **GV3 ME80**.
Please consult your Regional Sales Office.

Characteristics: pages B6/89 and B6/92
Dimensions: page B6/47

DF526344.eps

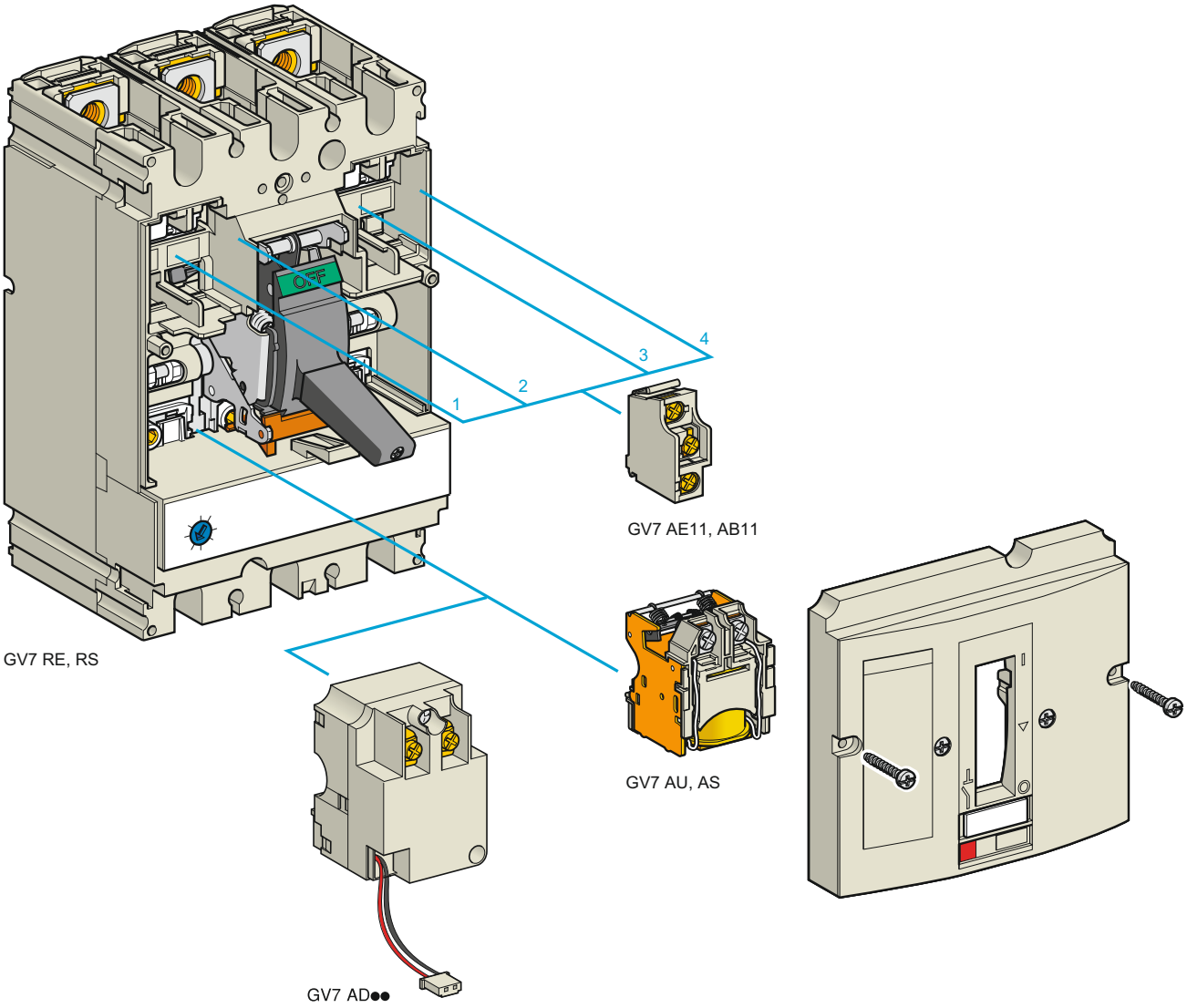

TeSys protection components
Thermal-magnetic motor circuit breakers
GV7 R with screw clamp connections
Add-on blocks and accessories

Add-on auxiliary contacts

These allow remote indication of the circuit breaker contact states. They can be used for signalling, electrical locking, relaying, etc. They are available in two versions: standard and low level. They include a terminal block and the auxiliary circuits leave the circuit breaker through a hole provided for this purpose.
They perform the following functions, depending on where they are located in the circuit breaker:

Location	Function	Application
1 and/or 4	C/O contact	Indicates the position of the circuit breaker poles
2	Trip indication	Indicates that the circuit breaker has tripped due to an overload, a short-circuit, a differential fault or the operation of a voltage trip (undervoltage or shunt trip), or of the “push to trip” test button. It resets when the circuit breaker is reset.
3	Electrical fault indication	Indicates that the circuit breaker has tripped due to an overload, a short-circuit or a differential fault. It resets when the circuit breaker is reset.

Type	Reference
Standard	**GV7AE11**
Low level	**GV7AB11**

Fault discrimination devices

These make it possible to:
- either differentiate a thermal fault from a magnetic fault,
- or open the contactor only in the event of a thermal fault.

Voltage	Reference
~ 24...48 and ⎓ 24…72 V	**GV7AD111** (1)
~ 110…240 V	**GV7AD112** (1)

Electric trips

These allow the circuit breaker to be tripped via an electrical control signal.

■ Undervoltage trip GV7 AU
□ Trips the circuit breaker when the control voltage drops below the tripping threshold, which is between 0.35 and 0.7 times the rated voltage.
□ Circuit breaker closing is only possible if the voltage exceeds 0.85 times the rated voltage.
Circuit breaker tripping by a GV7 AU trip meets the requirements of IEC 60947-2.

■ Shunt trip GV7 AS
Trips the circuit breaker when the control voltage rises above 0.7 times the rated voltage.

■ Operation (GV7 AU or GV7 AS)
□ When the circuit breaker has been tripped by a GV7 AU or AS, it must be reset either locally or by remote control. (For remote control, please consult your Regional Sales Office).
□ Tripping has priority over manual closing: if a tripping instruction is present, manual action does not result in closing, even temporarily, of the contacts.
□ Durability: 50 % of the mechanical durability of the circuit breaker.

Type	Voltage	Reference
Undervoltage trip	48 V, 50/60 Hz	**GV7AU055** (1)
	110…130 V, 50/60 Hz	**GV7AU107** (1)
	200…240 V, 50/60 Hz	**GV7AU207** (1)
	380…440 V, 50/60 Hz	**GV7AU387** (1)
	525 V, 50 Hz	**GV7AU525** (1)
Shunt trip	48 V, 50/60 Hz	**GV7AS055** (1)
	110…130 V, 50/60 Hz	**GV7AS107** (1)
	200…240 V, 50/60 Hz	**GV7AS207** (1)
	380…440 V, 50/60 Hz	**GV7AS387** (1)
	525 V, 50 Hz	**GV7AS525** (1)

(1) For mounting of a GV7 AD or a GV7 AU or AS.

Characteristics:
pages B6/51, B6/52 and B6/56

Dimensions:
pages B6/79 to B6/81

Schemes:
page B6/83

DF526343.eps

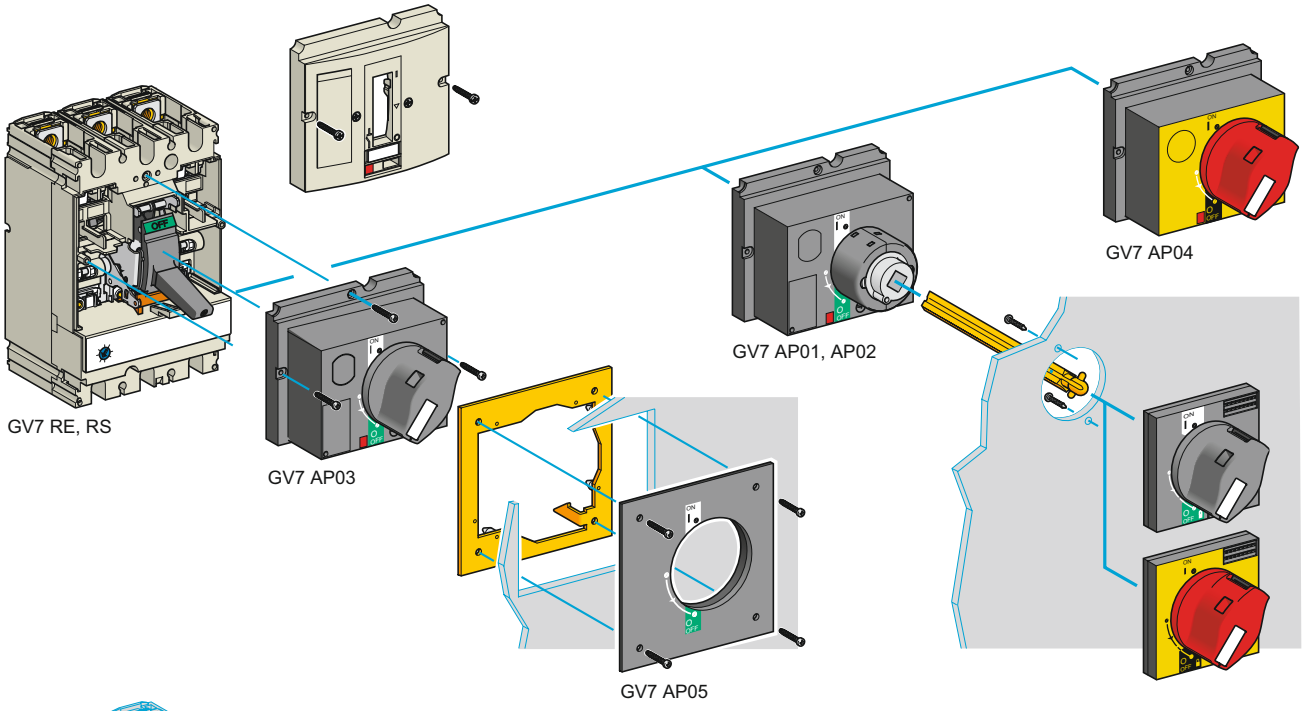

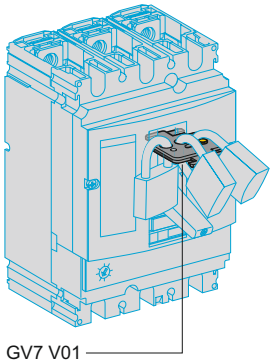

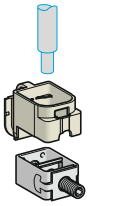

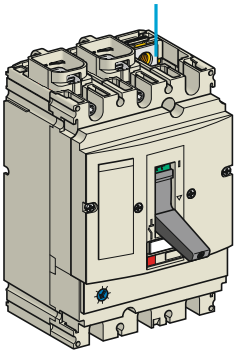

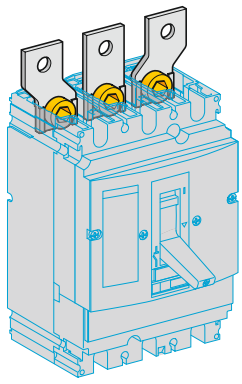

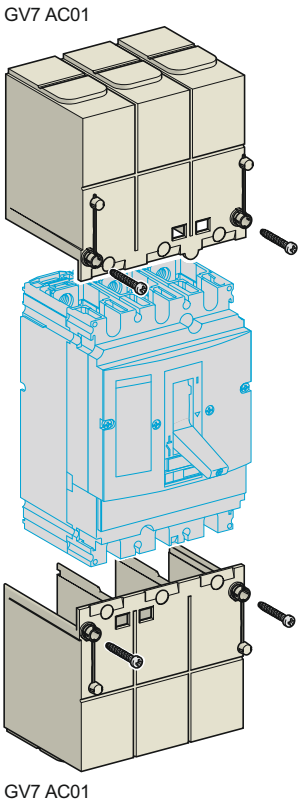

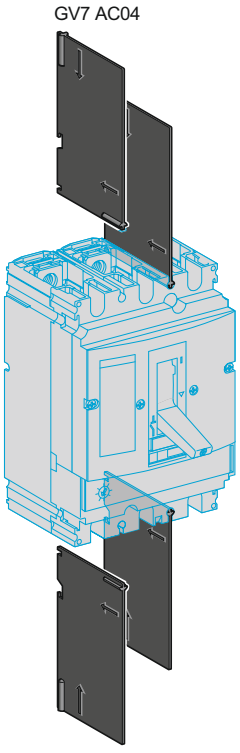

TeSys protection components
Thermal-magnetic motor circuit breakers
GV7 R with screw clamp connections
Accessories

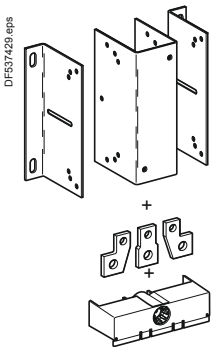

GV7 AC07

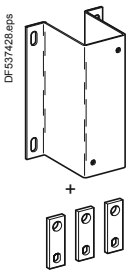

GV7 AC08

Cabling accessories

Description	Application	For use on contactors	Sold in lots of	Unit reference
Clip-on connectors for GV7 R	Up to 150 A, 1.5…95 mm²	–	3	**GV7AC021**
	Up to 220 A, 1.5…185 mm²	–	3	**GV7AC022**
Spreader 3-pole (1)	To increase the pitch to 45 mm	–	1	**GV7AC03**
Terminal shields IP 405 (1)	Supplied with sealing accessory	–	1	**GV7AC01**
Phase barriers	Safety accessories used when fitting of shields is impossible	–	2	**GV7AC04**
Insulating screens	Ensure insulation between the connections and the backplate	–	2	**GV7AC05**
Kits for combination with contactor (2)	Allowing link between the circuit breaker and the contactor. The cover provides protection against direct finger contact	LC1 F115…F185	1	**GV7AC06**
		LC1 F225 and F265	1	**GV7AC07**
		LC1 D115 and D150	1	**GV7AC08**

Direct rotary handle

Replaces the circuit breaker front cover; secured by screws. It includes a device for locking the circuit breaker in the O (Off) position by means of up to 3 padlocks with a shank diameter of 5 to 8 mm (padlocks not included). A conversion accessory allows the direct rotary handle to be mounted on the enclosure door. In this case, the door cannot be opened if the circuit breaker is in the “ON” position. Circuit breaker closing is inhibited if the enclosure door is open.

Description	Type	Degree of protection	Reference
Direct rotary handle	Black handle, black legend plate	IP 40	**GV7AP03**
	Red handle, yellow legend plate	IP 40	**GV7AP04**
Adapter plate (3)	Four mounting direct rotary handle on enclosure door	IP 43	**GV7AP05**

Extended rotary handle

Allows a circuit breaker installed in the back of an enclosure to be operated from the front of the enclosure.
It comprises:
- a unit which screws onto the front cover of the circuit breaker,
- an assembly (handle and front plate) to be fitted on the enclosure door,
- an extension shaft which must be adjusted (distance between the mounting surface and the door: 185 mm minimum, 600 mm maximum). It includes a device for locking the circuit breaker in the O (Off) position by means of up to 3 padlocks with a shank diameter of 5 to 8 mm (padlocks not included). This prevents the enclosure door from being opened.

Description	Type	Degree of protection	Reference
Extended rotary handle	Black handle, black legend plate	IP 55	**GV7AP01**
	Red handle, yellow legend plate	IP 55	**GV7AP02**

Locking device

Allows circuit breakers not fitted with a rotary handle to be locked in the O (Off) position by means of up to 3 padlocks with a shank diameter of 5 to 8 mm (padlocks not included).

Description	Application	Reference
Locking device	For circuit breaker not fitted with a rotary handle	**GV7V01**

(1) Terminal shields cannot be used together with spreaders.
(2) The kit comprises links, a protective shield and a depth adjustable metal bracket for the breaker.
(3) This conversion accessory makes it impossible to open the door if the device is closed and prevents the device from being closed if the door is open.

Dimensions:
pages B6/79 to B6/81

Protection components

Thermal-magnetic circuit breakers TeSys GB2 for the protection of industrial equipment control circuits

DF526243.tif



GB2 CB●●

Circuit breakers with magnetic tripping threshold: 12 to 16 In

Single-pole

Conventional rated thermal current Ith (1)	Magnetic tripping current Id ± 20 %	Sold in lots of	Unit reference
A	A		
0.5	6.6	6	GB2CB05
1	14	6	GB2CB06
2	26	6	GB2CB07
3	40	6	GB2CB08
4	52	6	GB2CB09
5	66	6	GB2CB10
6	83	6	GB2CB12
8	108	6	GB2CB14
10	138	6	GB2CB16
12	165	6	GB2CB20
16	220	6	GB2CB21
20	270	6	GB2CB22

DF526244.tif



GB2 CD●●

Single-pole + neutral

Conventional rated thermal current Ith (1)	Magnetic tripping current Id ± 20 %	Sold in lots of	Unit reference
A	A		
0.5	6.6	6	GB2CD05
1	14	6	GB2CD06
2	26	6	GB2CD07
3	40	6	GB2CD08
4	52	6	GB2CD09
5	66	6	GB2CD10
6	83	6	GB2CD12
8	108	6	GB2CD14
10	138	6	GB2CD16
12	165	6	GB2CD20
16	220	6	GB2CD21
20	270	6	GB2CD22

DF526245.tif



GB2 DB●●

2-pole

Conventional rated thermal current Ith (1)	Magnetic tripping current Id ± 20 %	Sold in lots of	Unit reference
A	A		
0.5	6.6	3	GB2DB05
1	14	3	GB2DB06
2	26	3	GB2DB07
3	40	3	GB2DB08
4	50	3	GB2DB09
5	66	3	GB2DB10
6	83	3	GB2DB12
8	108	3	GB2DB14
10	138	3	GB2DB16
12	165	3	GB2DB20
16	220	3	GB2DB21
20	270	3	GB2DB22

(1) Conforming to IEC 60947-1.

Presentation, selection : page B6/84
Characteristics : pages B6/85 to B6/87
Dimensions : page B6/88
Schemes : page B6/88

Protection components

Thermal-magnetic circuit breakers TeSys GB2 for the protection of industrial equipment control circuits

Circuit breakers with magnetic tripping threshold: 5 to 7 In

DF526246.tif



GB2 CS●●

Single-pole

Conventional rated thermal current Ith (1)	Magnetic tripping current Id ± 20 %	Sold in lots of	Unit reference
A	A		
0.5	3.3	6	**GB2CS05**
1	6	6	**GB2CS06**

(1) Conforming to IEC 60947-1.

Accessories for circuit breakers GB2-CB, DB and CS

Description	Sold in lots of	Unit reference
Busbar set for supply to 10 GB2 DB or 20 GB2 CB or GB2 CS with 2 connectors	1	**GB2G210**
Supply connector	10	**GB2G01**

TeSys GV, GB

Technical Data for Designers

Contents

Magnetic motor circuit breakers - TeSys GV:
> characteristics ..... B6/30 to B6/33
> curves ..... B6/34 to B6/42
> dimensions ..... B6/43 to B6/47
> schemes B6/48

Thermal magnetic motor circuit breakers - TeSys GV:
> presentation ..... B6/49 and B6/50
> characteristics ..... B6/51 to B6/56
> curves ..... B6/57 to B6/69
> dimensions ..... B6/70 to B6/81
> schemes ..... B6/82 and B6/83

Thermal magnetic motor circuit breakers - TeSys GB:
> presentation and selection B6/84
> characteristics ..... B6/85 to B6/87
> dimensions and schemes B6/88

Auxiliary contacts characteristics ..... B6/89 to B6/93

TeSys protection components
Magnetic motor circuit breakers
GV2 LE and GV2 L

TeSys GV

Environment

Circuit breaker type			GV2 LE		GV2 L	
Conforming to standards			IEC 60947-1, 60947-2, EN 60204, NF C 63-650, NF C63-120, 79-130, VDE 0113, 0660.			
Product certifications			CSA, CCC		CSA, CCC, BV, DNV, GL, LROS, RINA	
Protective treatment			"TH"		"TH"	
Shock resistance	Conforming to IEC 60068-2-27		30 gn		30 gn	
Vibration resistance	Conforming to IEC 60068-2-6		5 gn (5 to 150 Hz)		5 gn (5 to 150 Hz)	
Ambient air temperature	Storage	°C	-40…+80		-40…+80	
	Operation	°C	-20…+60		-20…+60	
Flame resistance	Conforming to IEC 60695-2-1	°C	960		960	
Maximum operating altitude		m	2000		2000	
Operating position			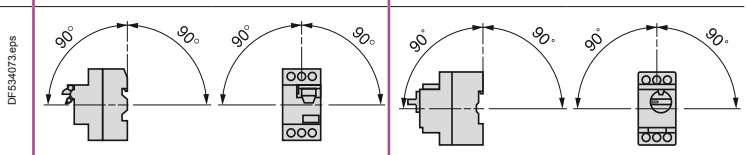			
Connection (Max. number of conductors x c.s.a)			Min.	Max.	Min.	Max.
	Solid cable	mm²	2 x 1	2 x 6	2 x 1	2 x 6
	Flexible cable without cable end	mm²	2 x 1.5	2 x 6	2 x 1.5	2 x 6
	Flexible cable with cable end	mm²	2 x 1	2 x 4	2 x 1	2 x 4
Tightening torque		N.m	1.7		1.7	
Suitable for isolation	Conforming to IEC 60947-1 § 7-1-6		Yes		Yes	
Resistance to mechanical impact		J	0.5		0.5	

Technical characteristics

Utilisation category	Conforming to IEC 60947-2		A	A
	Conforming to IEC 60947-4-1		AC-3	AC-3
Rated operational voltage (Ue)	Conforming to IEC 60947-2	V	690	690
Rated insulation voltage (Ui)	Conforming to IEC 60947-2	V	690	690
Rated operational frequency	Conforming to IEC 60947-2	Hz	50/60	50/60
Rated impulse withstand voltage (U imp)	Conforming to IEC 60947-2	kV	6	6
Total power dissipated per pole		W	1.8	1.8
Mechanical durability (C.O.: Closing, Opening)	For AC-3 duty	C.O.	100 000	100 000
Electrical durability for AC-3/415V duty (C.O.: Closing, Opening)		C.O.	100 000	100 000
Duty class (maximum operating rate)		C.O./h	40	40
Rated duty	Conforming to IEC 60947-4-1		Continuous duty	Continuous duty

References: pages B6/2 and B6/3
Dimensions: pages B6/43 to B6/47
Schemes: page B6/48

TeSys protection components
Magnetic motor circuit breakers
GV2 LE and GV2 L

TeSys GV

Circuit breaker type				GV2 LE									GV2 L								
				03 to 06	07	08	10	14	16	20	22	32	03 to 05	06 & 07	08	10	14	16	20	22	32
Rating			A	0.4 to 1.6	2.5	4	6.3	10	14	18	25	32	0.4 to 1	1.6 to 2.5	4	6.3	10	14	18	25	32
Breaking capacity conforming to IEC 60947-2	230/240 V	Icu	kA	★	★	★	★	★	★	★	50	50	★	★	★	★	★	★	★	50	50
		Ics % (1)		★	★	★	★	★	★	★	100	100	★	★	★	★	★	★	★	100	100
	400/415 V	Icu	kA	★	★	★	★	★	15	15	15	10	★	★	★	★	★	50	50	50	50
		Ics % (1)		★	★	★	★	★	50	50	40	50	★	★	★	★	★	50	50	50	50
	440 V	Icu	kA	★	★	★	50	15	8	8	6	6	★	★	★	★	20	20	20	20	20
		Ics % (1)		★	★	★	100	100	50	50	50	50	★	★	★	★	75	75	75	75	75
	500 V	Icu	kA	★	★	★	50	10	6	6	4	4	★	★	★	★	10	10	10	10	10
		Ics % (1)		★	★	★	100	100	75	75	75	75	★	★	★	★	100	75	75	75	75
	690 V	Icu	kA	★	3	3	3	3	3	3	3	3	★	4	4	4	4	4	4	4	4
		Ics % (1)		★	75	75	75	75	75	75	75	75	★	100	100	100	100	100	100	100	100
Associated fuses (if required) if Isc > breaking capacity Icu conforming to IEC 60947-2 amendment 1	230/240 V	aM	A	★	★	★	★	★	★	★	80	80	★	★	★	★	★	★	★	100	100
		gG	A	★	★	★	★	★	★	★	100	100	★	★	★	★	★	★	★	125	125
	400/415 V	aM	A	★	★	★	★	★	63	63	80	80	★	★	★	★	★	80	100	100	100
		gG	A	★	★	★	★	★	80	80	100	100	★	★	★	★	★	100	125	125	125
	440 V	aM	A	★	★	★	50	50	50	50	63	63	★	★	★	★	50	63	80	80	80
		gG	A	★	★	★	63	63	63	63	80	80	★	★	★	★	63	80	100	100	100
	500 V	aM	A	★	★	★	50	50	50	50	50	50	★	★	★	★	50	50	50	50	50
		gG	A	★	★	★	63	63	63	63	63	63	★	★	★	★	63	63	63	63	63
	690 V	aM	A	★	16	25	32	32	40	40	40	40	★	20	25	40	40	50	50	50	50
		gG	A	★	20	32	40	40	50	50	50	50	★	25	32	50	50	63	63	63	63
Cable protection against thermal stress in the event of short-circuit (PVC insulated copper cables) Minimum c.s.a. protected at 40 °C and at Isc max.	1 mm²		kA	●	●	●	⩽10	⩽ 6	(2)	(2)	(2)	(2)	●	●	●	⩽10	⩽ 6	(2)	(2)	(2)	(2)
	1.5 mm²		kA	●	●	●	⩽20	⩽10	(2)	(2)	(2)	(2)	●	●	●	⩽20	⩽10	(2)	(2)	(2)	(2)
	2.5 mm²			●	●	●	●	●	●	●	●	(2)	●	●	●	●	●	●	●	●	(2)
	4…6 mm²			●	●	●	●	●	●	●	●	●	●	●	●	●	●	●	●	●	●

★ *> 100 kA.*
● *Cable c.s.a. protected.*
(1) As % of Icu.
(2) Cable c.s.a. not protected.

References: pages B6/2 and B6/3
Dimensions: pages B6/43 to B6/47
Schemes: page B6/48

TeSys protection components
Magnetic motor circuit breakers
GV3 L

TeSys GV

Environment

Circuit breaker type			GV3 L	
Conforming to standards			IEC/EN 60947-1, 60947-2	
Protective treatment			"TH"	
Degree of protection (front face)	Conforming to IEC 60529		IP20 against finger direct contact	
Shock resistance	Conforming to IEC 60068-2-27		On : 15 gn -11 ms Off : 30 gn -11 ms	
Vibration resistance	Conforming to IEC 60068-2-6		4 gn (5…300 Hz)	
Flame resistance	Conforming to IEC 60695-2-1	°C	960	
Ambient air temperature	Storage	°C	-40…+80	
	Operation	°C	-20…+60 (1)	
Maximum operating altitude		m	3000	
Operating position Without derating, in relation to normal vertical mounting plane (2)			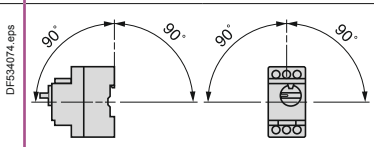	
Connection (Max. number of conductors x c.s.a)			Min.	Max.
	Solid cable	mm²	2 x 1	1 x 25 1 x 35
	Flexible cable without cable end	mm²	2 x 1	1 x 25 1 x 35
	Flexible cable with cable end	mm²	2 x 1	1 x 25 1 x 35
Tightening torque		N.m	5	5 : 25 mm² 8 : 35 mm²
Suitable for isolation conforming to IEC 60947-1 § 7-1-6			Yes	

Technical characteristics

Rated insulation voltage (Ui)	Conforming to IEC 60947-2	V	690
Rated impulse withstand voltage (U imp)	Conforming to IEC 60947-2	kV	6
Rated operational voltage (Ue)	Conforming to IEC 60947-2	V	690
Rated operational frequency		Hz	50/60
Electrical durability for AC-3/415V duty (C.O.: Close - Open)		C.O.	50 000
Mechanical durability (C.O.: Closing, Opening)		C.O.	50 000
Maximum operating rate		C.O./h	25
Operating threshold of magnetic trips			14 I max
Utilisation category	Conforming to IEC 60947-2		A

(1) Leave a space of 9 mm between 2 circuit breakers: either an empty space or side-mounting add-on contact blocks. Side by side mounting is possible up to 40 °C.
(2) When mounting on a vertical rail, fit a stop to prevent any slippage.

References: pages B6/2 and B6/3
Dimensions: pages B6/43 to B6/47
Schemes: page B6/48

TeSys protection components
Magnetic motor circuit breakers
GV3 L

TeSys GV

Breaking capacity of GV3 L

Type				GV3 L25	GV3 L32	GV3 L40	GV3 L50	GV3 L65
Breaking capacity of the circuit-breaker only or of the circuit-breaker combined with a thermal overload relay	230/240 V	Icu	**kA**	100	100	100	100	100
		Ics % (1)		100	100	100	100	100
	400/415 V	Icu	**kA**	100	100	50	50	50
		Ics % (1)		100	100	100	100	100
	440 V	Icu	**kA**	50	50	50	50	50
		Ics % (1)		100	100	100	100	100
	500 V	Icu	**kA**	12	12	12	12	12
		Ics % (1)		50	50	50	50	50
	690 V	Icu	**kA**	6	6	6	6	6
		Ics % (1)		50	50	50	50	50
Associated fuses (if required) for use with circuit breaker only or circuit breaker combined with a thermal overload relay if Isc > breaking capacity	230/240 V	aM	**A**	★	★	★	★	★
		gG	**A**	★	★	★	★	★
	415 V	aM	**A**	★	★	★	★	125
		gG	**A**	★	★	★	★	160
	440 V	aM	**A**	63	80	125	125	125
		gG	**A**	80	100	160	160	160
	500 V	aM	**A**	63	63	63	63	80
		gG	**A**	80	80	80	80	100
	690 V	aM	**A**	50	50	50	50	63
		gG	**A**	63	63	63	63	80
Use of circuit breakers without fuses				Minimum cable length (in metres) limiting the maximum short-circuit current to 35 kA maximum.				
Cable c.s.a.			**mm²**	**≤ 25**	**35**	**50**	**70**	**95**
Isc (rms) 3-phase, incoming (Ue = 415 V)		50 kA	**m**	5	6	8	10	13
		45 kA	**m**	5	5	7	8	10
		40 kA	**m**	5	5	5	5	8
		37 kA	**m**	5	5	5	5	5

★ *Fuse not required: breaking capacity Icn > Isc.*

(1) As % of Icu.

Circuit breakers

References: pages B6/2 and B6/3
Dimensions: pages B6/43 to B6/47
Schemes: page B6/48

Tripping curves for GV2 L or LE combined with thermal overload relay LRD or LR2 K

Average operating times at 20 °C related to multiples of the setting current

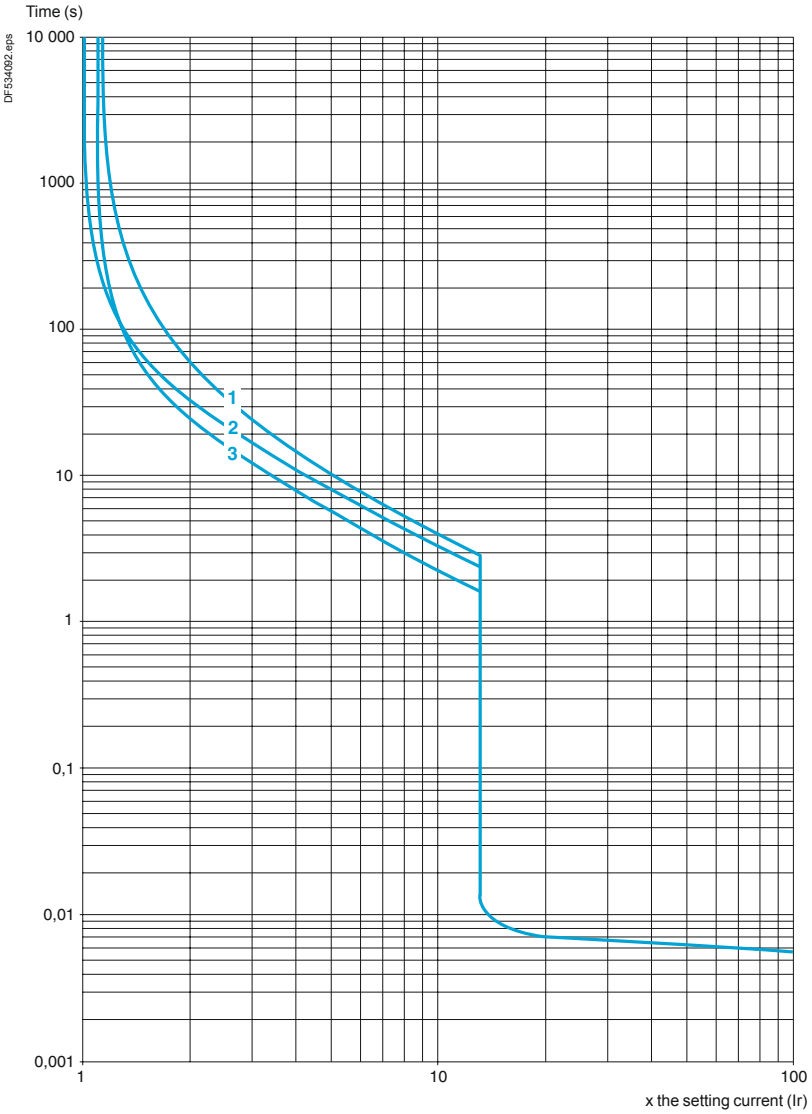

1 3 poles from cold state
2 2 poles from cold state
3 3 poles from hot state

Current limitation on short-circuit for GV2 L and GV2 LE only (3-phase 400/415 V)

Dynamic stress

I peak = f (prospective Isc) at 1.05 Ue = 435 V

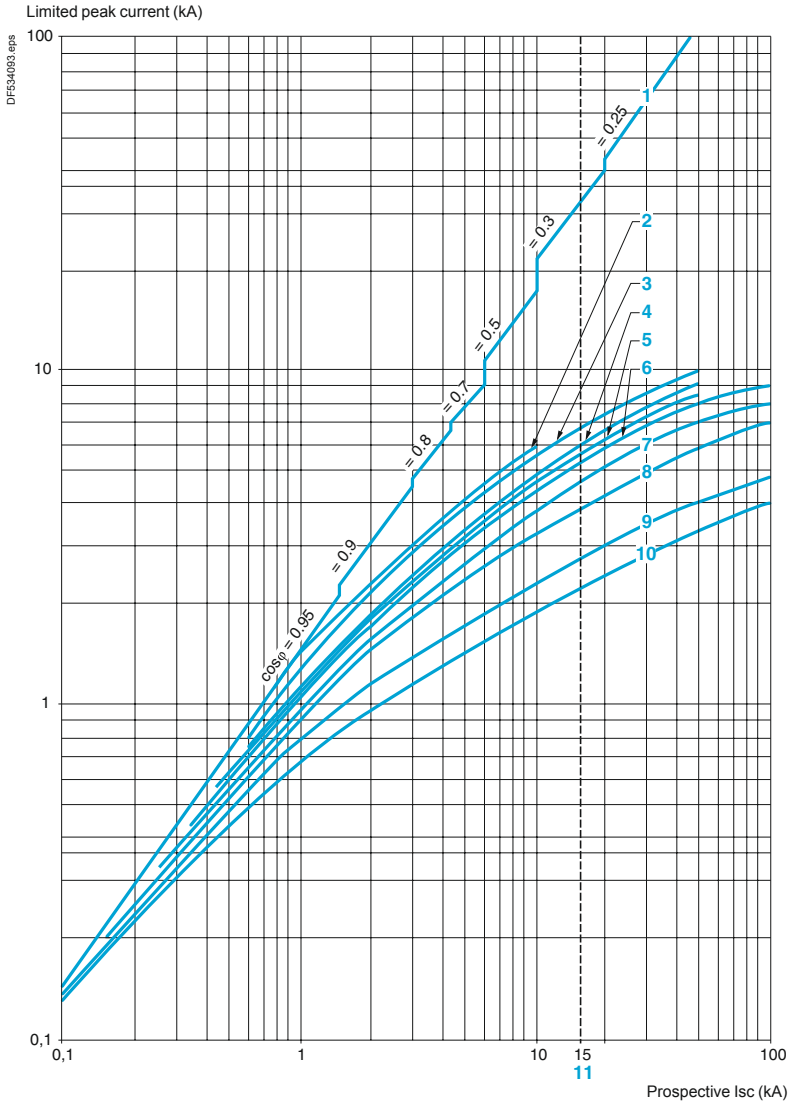

1 Maximum peak current
2 32 A
3 25 A
4 18 A
5 14 A
6 10 A
7 6.3 A
8 4 A
9 2.5 A
10 1.6 A
11 Limit of rated ultimate breaking capacity on short-circuit of GV2 LE (14, 18, 23 and 25 A ratings).

References:
pages B6/2 and B6/3

Dimensions:
pages B6/43 to B6/47

Schemes:
page B6/48

Current limitation on short-circuit for GV2 L and GV2 LE + thermal overload relay LRD or LR2 K (3-phase 400/415 V)

Dynamic stress

I peak = f (prospective Isc) at 1.05 Ue = 435 V

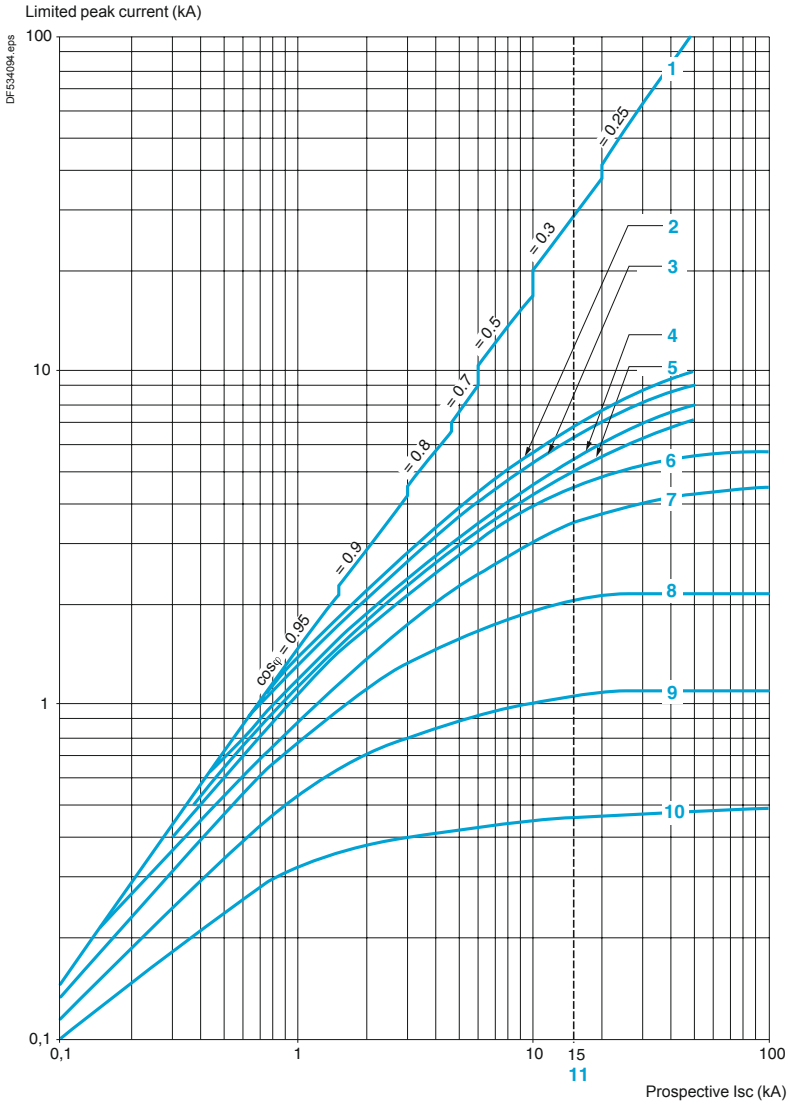

1 Maximum peak current
2 32 A
3 25 A
4 18 A
5 14 A
6 10 A
7 6.3 A
8 4 A
9 2.5 A
10 1.6 A
11 Limit of rated ultimate breaking capacity on short-circuit of GV2 LE (14, 18, 23 and 25 A ratings).

References:
pages B6/2 and B6/3

Dimensions:
pages B6/43 to B6/47

Schemes:
page B6/48

Thermal limit on short-circuit for GV2 LE only

Thermal limit in kA²s in the magnetic operating zone

Sum of I²dt = f (prospective Isc) at 1.05 Ue = 435 V

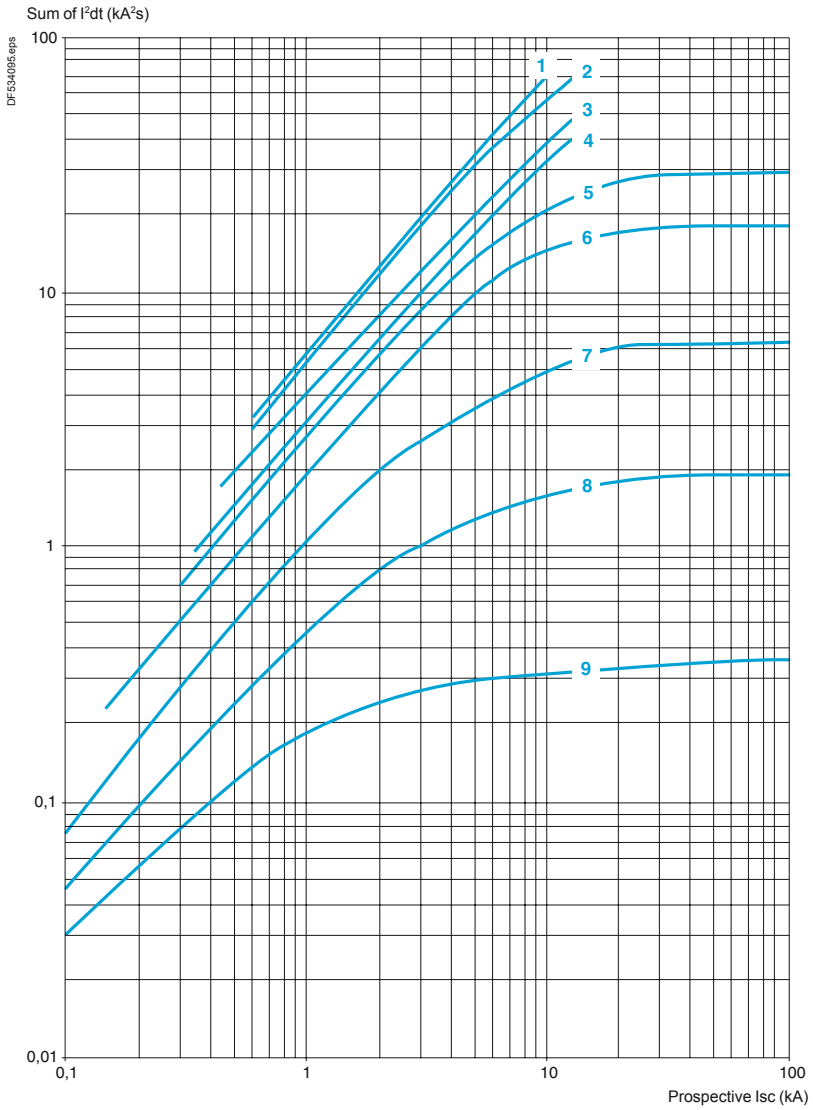

1 32 A
2 25 A
3 18 A
4 14 A
5 10 A
6 6.3 A
7 4 A
8 2.5 A
9 1.6 A

References:
pages B6/2 and B6/3

Dimensions:
pages B6/43 to B6/47

Schemes:
page B6/48

Thermal limit on short-circuit for GV2 L only

Thermal limit in kA²s in the magnetic operating zone

Sum of I²dt = f (prospective Isc) at 1.05 Ue = 435 V

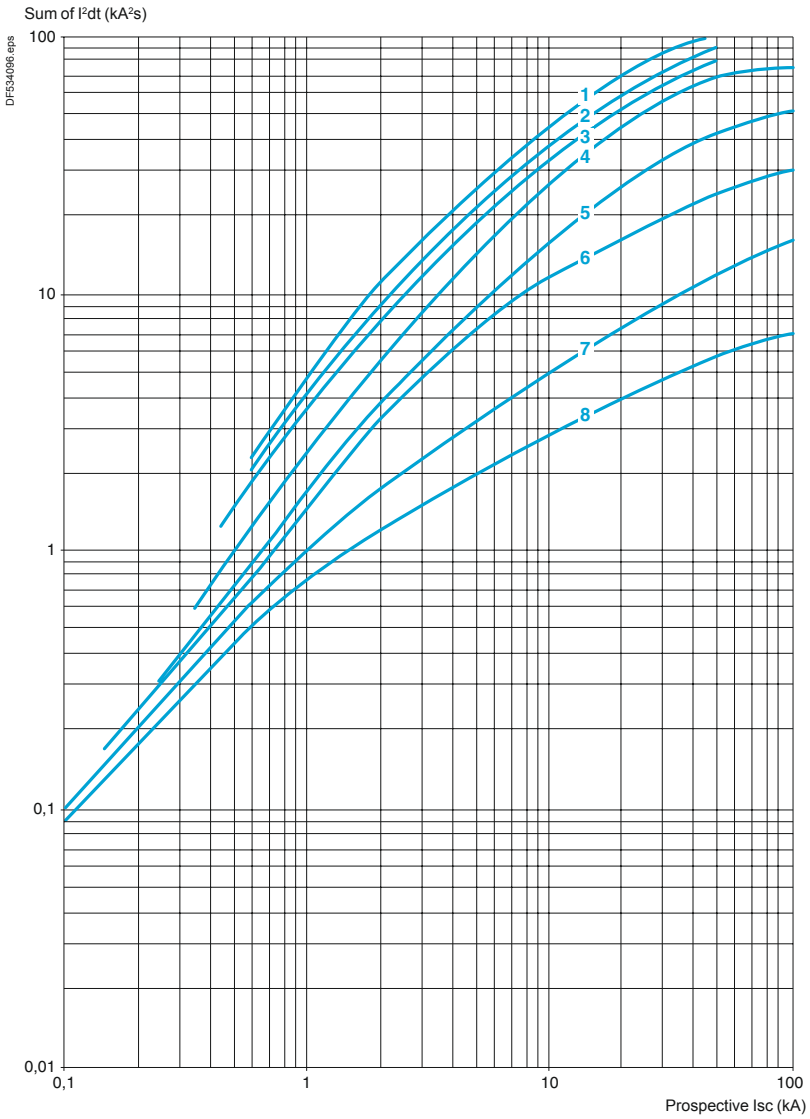

1 25 A and 32 A
2 18 A
3 14 A
4 10 A
5 6.3 A
6 4 A
7 2.5 A
8 1.6 A

Thermal limit on short-circuit for GV2 L and GV2 LE + thermal overload relay LRD or LR2 K

Thermal limit in kA²s in the magnetic operating zone

Sum of I²dt = f (prospective Isc) at 1.05 Ue = 435 V

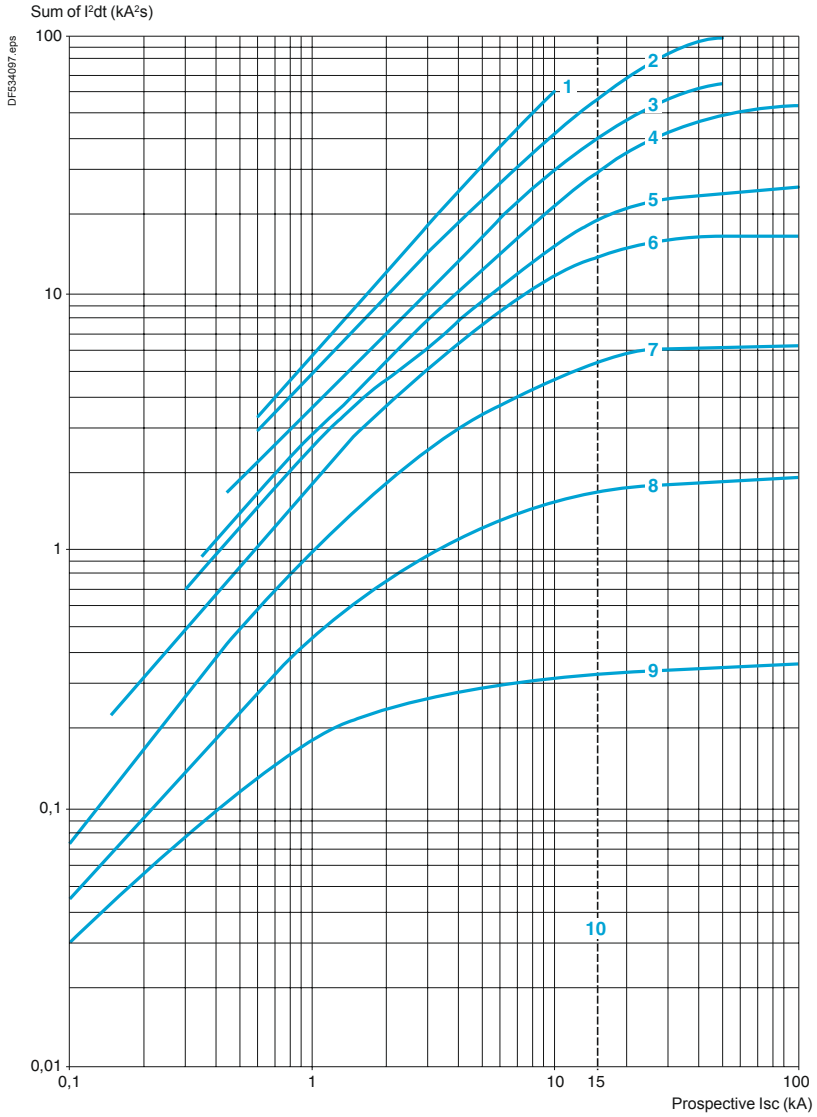

1 32 A (GV2 LE32)
2 25 A and 32 A (GV2 L32)
3 18 A
4 14 A
5 10 A
6 6.3 A
7 4 A
8 2.5 A
9 1.6 A
10 Limit of rated ultimate breaking capacity on short-circuit of GV2 LE (14, 18, 23 and 25 A ratings).

References:
pages B6/2 and B6/3

Dimensions:
pages B6/43 to B6/47

Schemes:
page B6/48

Tripping curves for GV3 L combined with thermal overload relay LRD 33

Average operating time at 20 °C without prior current flow

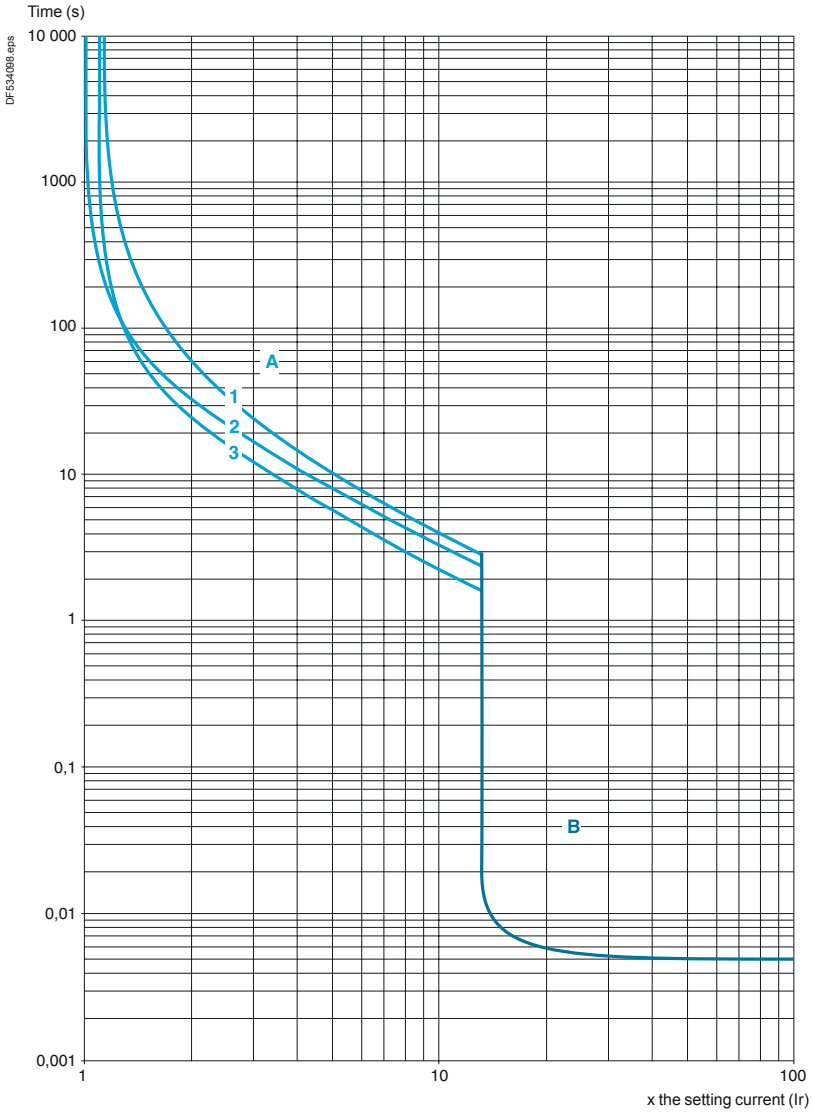

1 3 poles from cold state
2 2 poles from cold state
3 3 poles from hot state

A Thermal overload relay protection zone
B GV3 L protection zone

References:
pages B6/2 and B6/3

Dimensions:
pages B6/43 to B6/47

Schemes:
page B6/48

Current limitation on short-circuit for GV3 L (3-phase 400/415 V)

Dynamic stress

I peak = f (prospective Isc) at 1.05 Ue = 435 V

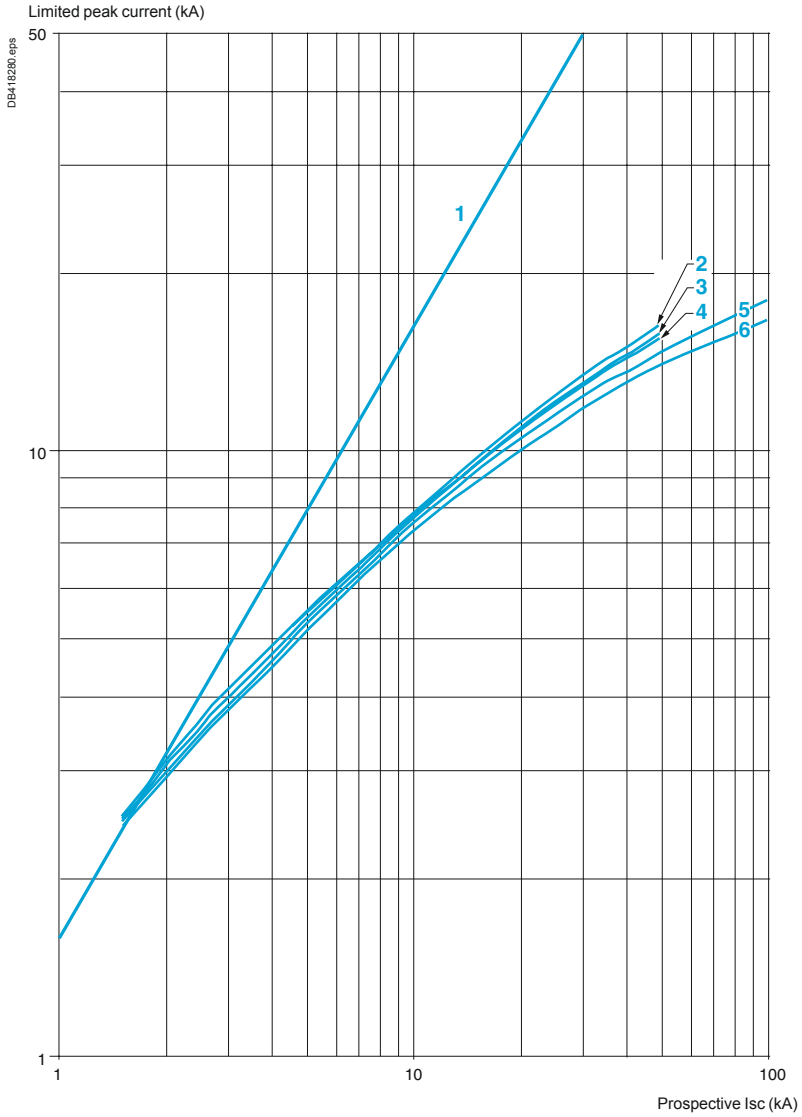

1 Maximum peak current
2 GV3 L65
3 GV3 L50
4 GV3 L40
5 GV3 L32
6 GV3 L25

References:
pages B6/2 and B6/3

Dimensions:
pages B6/43 to B6/47

Schemes:
page B6/48

Thermal limit on short-circuit for GV3 L

Thermal limit in A^2s

Sum of I^2dt = f (prospective Isc) at 1.05 Ue = 435 V

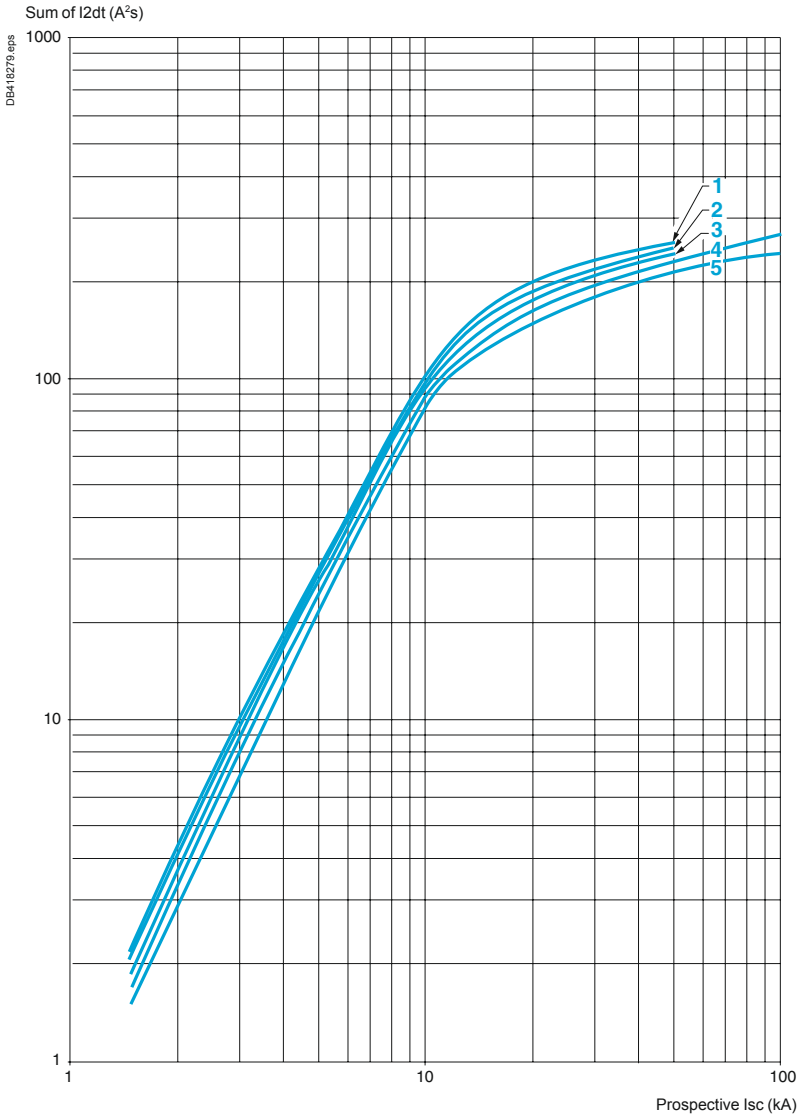

1 GV3 L65
2 GV3 L50
3 GV3 L40
4 GV3 L32
5 GV3 L25

TeSys protection components
Magnetic motor circuit breakers
GV2 L and GV2 LE

GV2 L

Dimensions

DF537438.eps

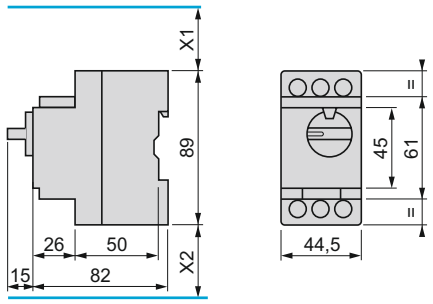

GV AD, AM, AN, AU, AS

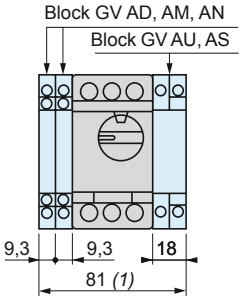

GV2 AK00

DF537439.eps

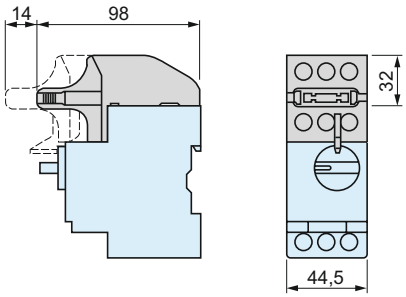

X1 Electrical clearance = 40 mm for Ue ≤ 415 V, or 80 mm for Ue = 440 V, or 120 mm for Ue = 500 and 690 V.
X2 = 40 mm.

(1) Maximum.

Mounting

On rail AM1 DE200, AM1 ED200 (35 x 15)

DF537440.eps

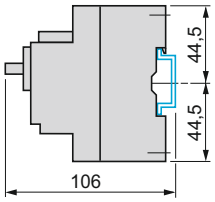

Panel mounted

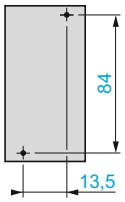

On pre-slotted mounting plate AM1 PA

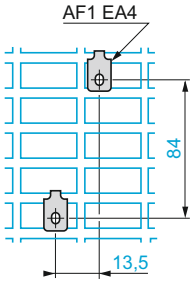

Adapter plate GK2 AF01

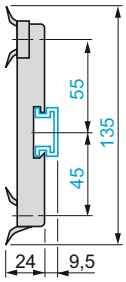

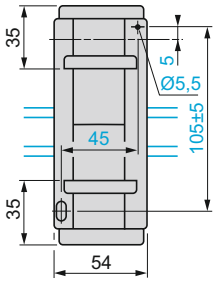

7.5 mm height compensation plate GV1 F03

DF537441.eps



GV2 LE

Dimensions

DF537442.eps

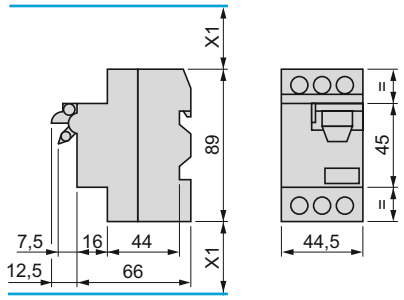

GV AD, AM, AN, AU, AS

DF537477.eps

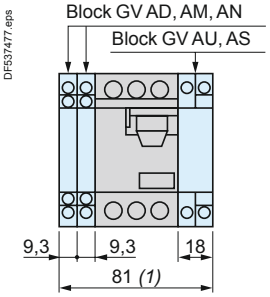

GV AE

DF537443.eps

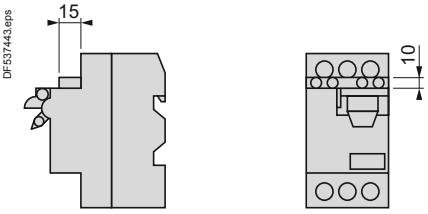

X1 Electrical clearance = 40 mm for Ue ≤ 690 V.

(1) Maximum.

Mounting

On 35 mm ⎓ rail

DF537444.eps

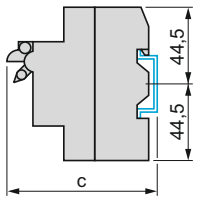

c = 80 on AM1 DP200 (35 x 7.5) and 88 on AM1 DE200, ED200 (35 x15)

On panel with adapter plate GV2 AF02

DF537445.eps

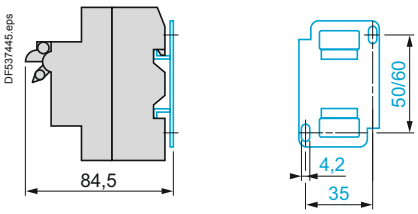

On pre-slotted plate AM1 PA

DF537446.eps

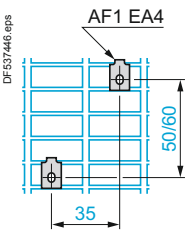

On rails DZ5 MB201

DF537447.eps

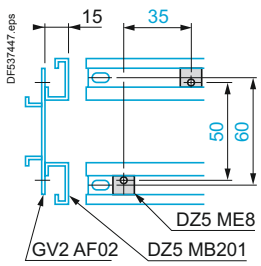

Mounting

Mounting of external operator GV2 APN01, GV2 APN02 or GV2 APN04 for motor circuit breakers GV2 L

DB127415.eps

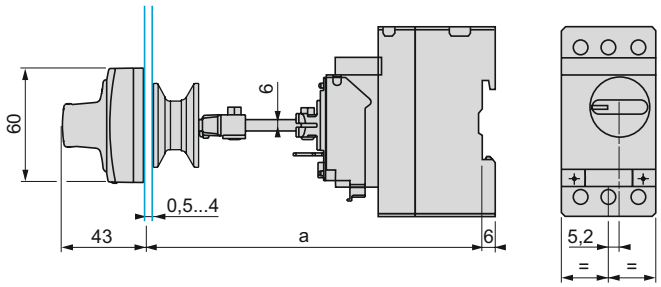

Door cut-out

DB126634.eps

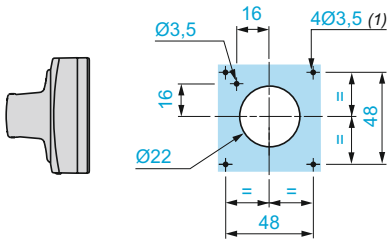

(1) For IP65 only.

Mounting of external operator GV APH02 for motor circuit breakers GV2 L

DB127414.eps

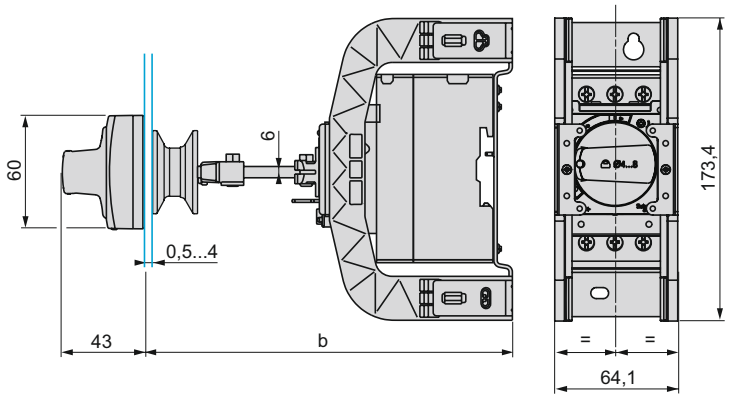

Door cut-out

DB126634.eps

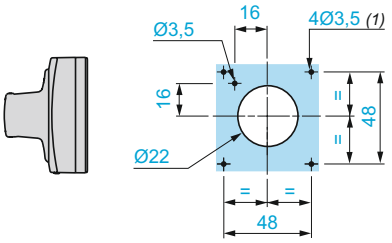

(1) For IP65 only.

	a		b	
	Mini	Maxi	Mini	Maxi
GV2 APN●●	140	250		
GV2 APN●● + GV APH02			151	250
GV2 APN●● + GV APK11	250	434	-	-
GV2 APN●● + GV APH02 + GV APK11	-	-	250	445

Mounting of external operator GV2 AP03 for GV2 LE

DB126649.eps

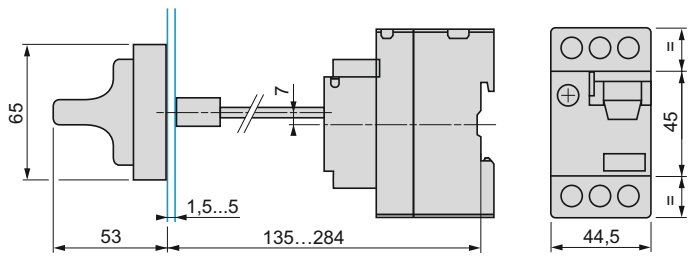

Door cut-out

DF569008.eps

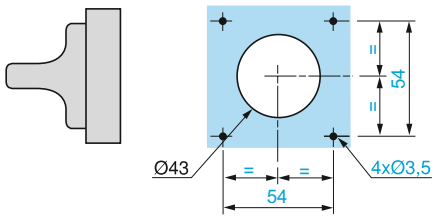

GV2 L and GV2 LE

Sets of busbars GV2 G445, GV2 G454, GV2 G472, with terminal block GV2 G05

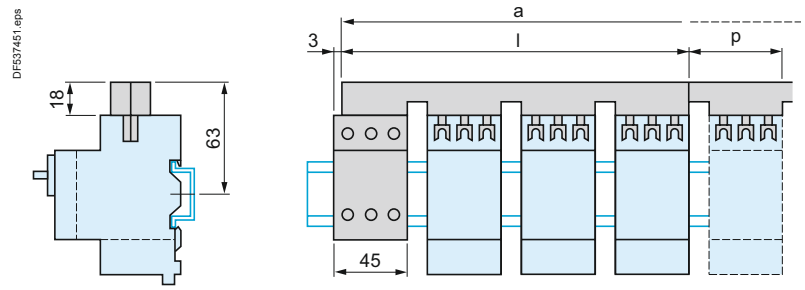

	l	p
GV2 G445 (4 x 45 mm)	179	45
GV2 G454 (4 x 54 mm)	206	54
GV2 G472 (4 x 72 mm)	260	72

	a			
Number of tap-offs	**5**	**6**	**7**	**8**
GV2 G445	224	269	314	359
GV2 G454	260	314	368	422
GV2 G472	332	404	476	548

Sets of busbars for GV2 L and GV2 LE

Sets of busbars GV2 G●●● with term. block GV1 G09

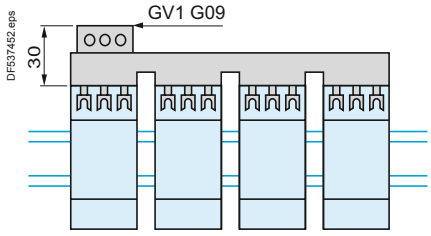

Sets of busbars GV2 G245, GV2 G254, GV2 GR272

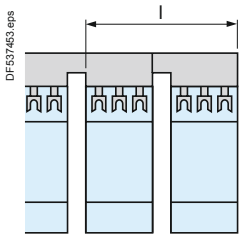

	l
GV2 G245 (2 x 45 mm)	89
GV2 G254 (2 x 54 mm)	98
GV2 G272 (2 x 72 mm)	116

Set of busbars GV2 G554

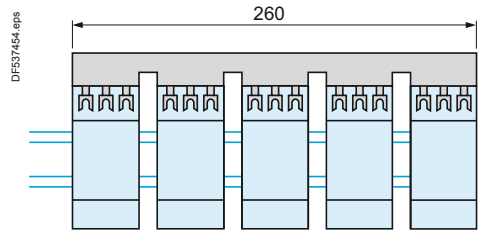

Sets of busbars GV2 G345 and GV2 G354

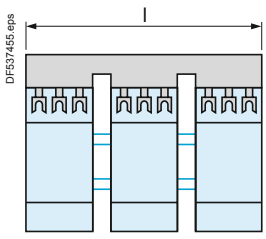

	l
GV2 G345 (3 x 45 mm)	134
GV2 G354 (3 x 54 mm)	152

GV3 L

Dimensions

DF537480.eps

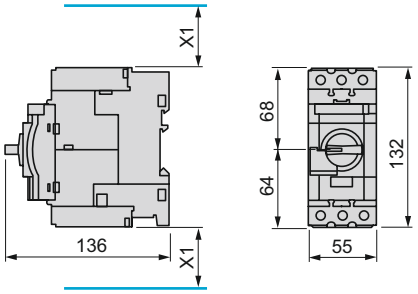

DF537481.eps

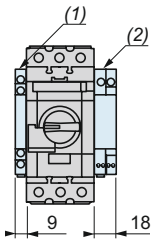

X1 = Electrical clearance (ISC max)
40 mm for Ue ⩽ 500 V, 50 mm for Ue ⩽ 690 V

(1) Blocks GV AN●● , GV AD●● and GV AM11.
(2) Blocks GV3 AU●● and GV3 AS●●.

***Note:** Leave a space of 9 mm between 2 circuit breakers: either an empty space or side-mounting add-on contact blocks.*
Side by side mounting is possible up to 40 °C.

Mounting

Mounting with Tesys contactor LC1 D40A…D65A and relay LR3 D313…365

DF567744.eps

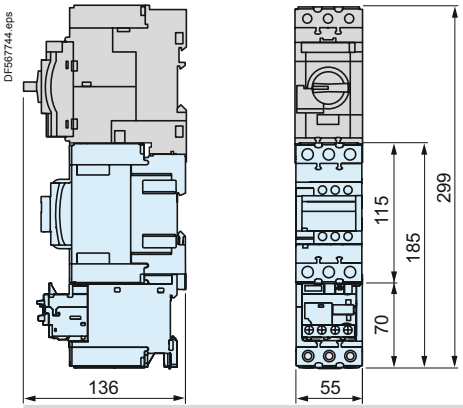

Side by side mounting with Tesys contactor LC1 D40A…D65A (S-shape busbar system GV3 S)

DF567745.eps

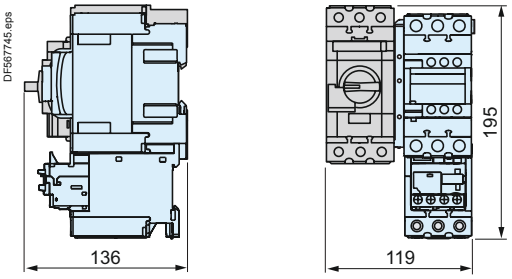

Mounting on rail AM1 DE200 or AM1 ED201

DF537482.eps

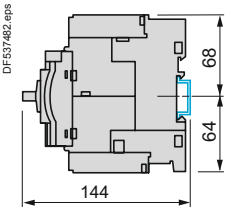

Panel mounting, using M4 screws

DF567748.eps

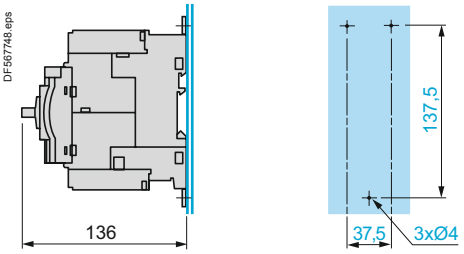

Mounting on pre-slotted plate AM1 PA

DF537435.eps

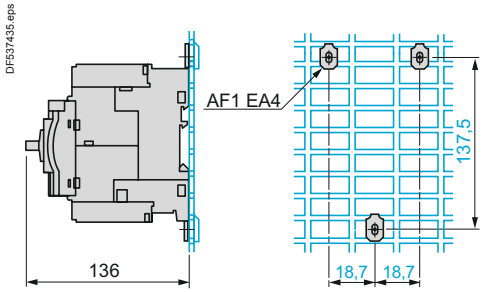

Set of busbars GV3 G264

DF510637.eps

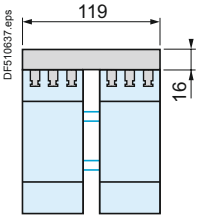

Set of busbars GV3 G364

DF510638.eps

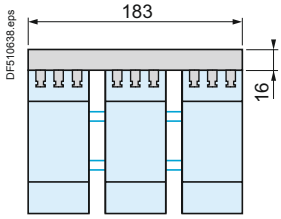

Mounting

Mounting of external operator GV3 APN01, GV3 APN02 or GV3 APN04 for motor circuit breakers GV3 L

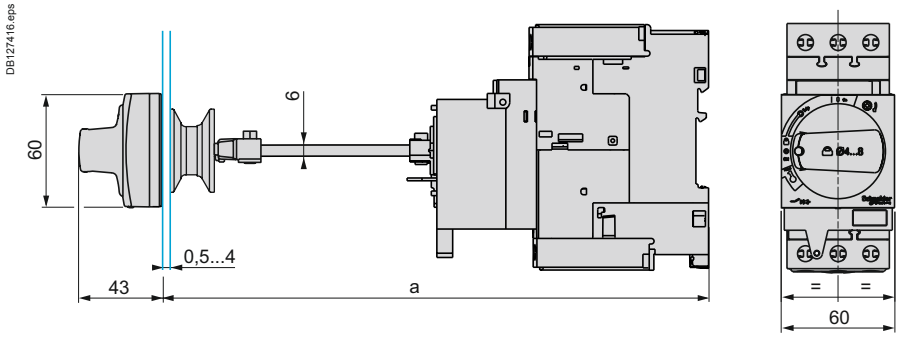

Door cut-out

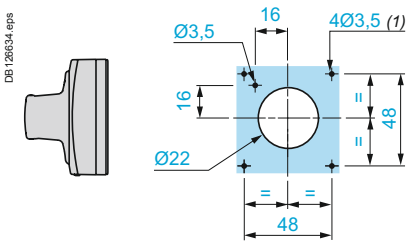

(1) For IP65 only.

Mounting of external operator GV APH03 for motor circuit breakers GV3 L

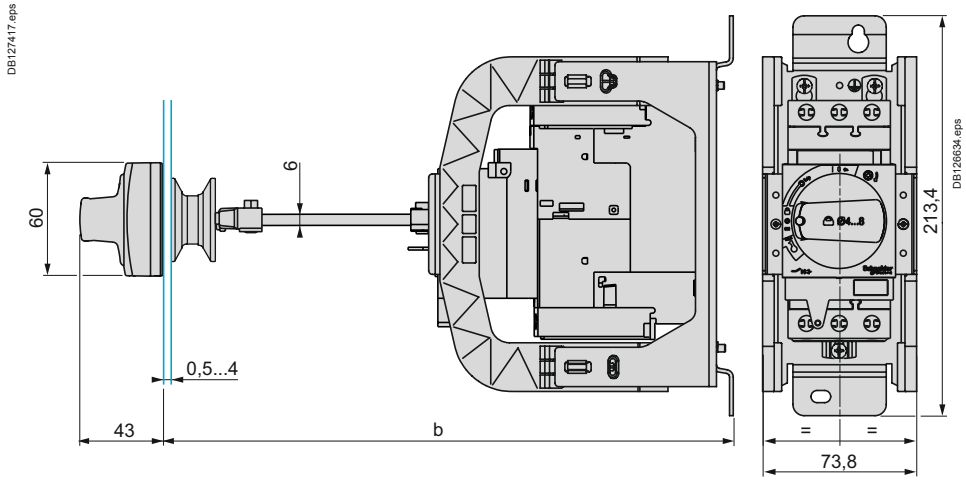

Door cut-out

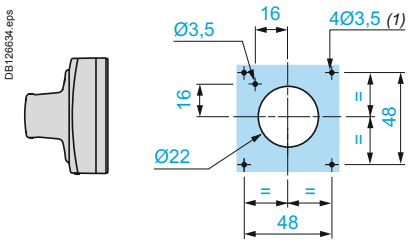

(1) For IP65 only.

	a		b	
	Mini	Maxi	Mini	Maxi
GV3 APN●●	189	300	-	-
GV3 APN●● + GV APK12	300	481		
GV3 APN●● + GV APH03	-	-	200	300
GV3 APN●● + GV APH03 + GV APK12	-	-	300	492

TeSys protection components
Magnetic motor circuit breakers
GV2 L, GV2 LE, GV3 L

Magnetic motor circuit breakers

GV2 L●●

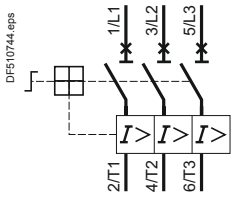

GV2 LE●●

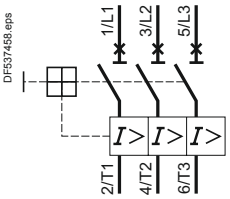

GV3 L●●

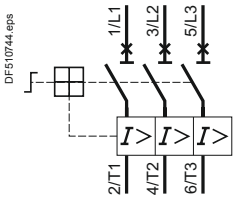

Accessories

Front mounting add-on contact blocks
Instantaneous auxiliary contacts

GV AE1

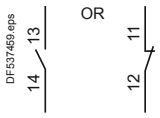

GV AE11

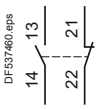

GV AE20

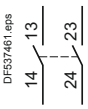

GV AED101 and GV AED011

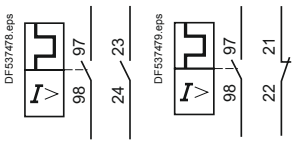

Side mounting add-on contact blocks
Instantaneous auxiliary contacts and fault signalling contacts

GV AD0110

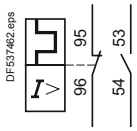

GV AD0101

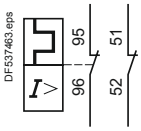

GV AD1010

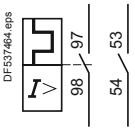

GV AD1001

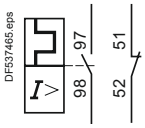

Instantaneous auxiliary contacts

GV AN11

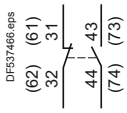

GV AN20

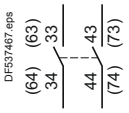

Short-circuit signalling contacts

GV AM11

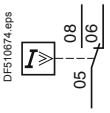

Voltage trips

GV AU●●●

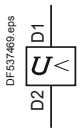

GV AS●●●

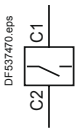

Start-Stop signalling contact blocks

GK2 AX10

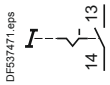

GK2 AX20

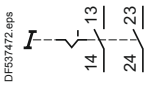

GK2 AX50

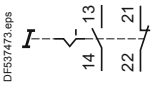

Fault signalling contact blocks

GK2 AX12

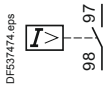

GK2 AX22

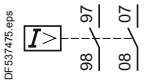

GK2 AX52

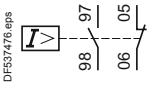

TeSys protection components
Thermal-magnetic motor circuit breakers GV2, GV3 and GV7

DF526134.tif

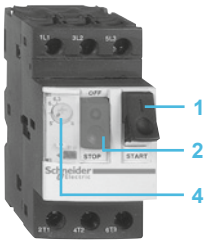

GV2 ME with screw clamp terminals

DF526135.tif

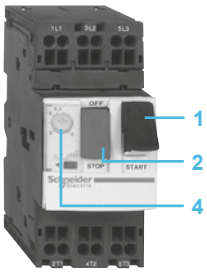

GV2 ME with spring terminals connections

DF526136.tif

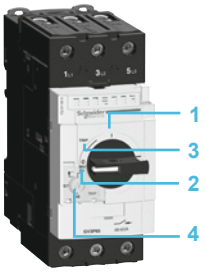

GV3 P

DF526137.tif

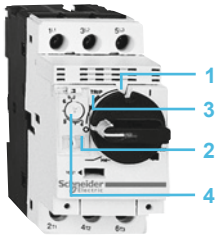

GV2 P

DF526138.tif

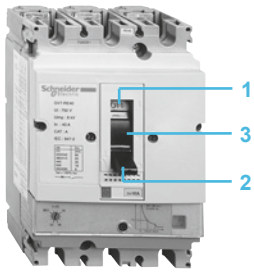

GV7 R

Presentation

GV2 ME, GV2 P, GV3 ME, GV3 P and GV7 R motor circuit breakers are 3-pole thermal-magnetic circuit breakers **specifically designed for the control and protection of motors**, conforming to standards IEC 60947-2 and IEC 60947-4-1.

Connection

GV2

GV2 ME and GV2 P circuit breakers are designed for connection by screw clamp terminals.
Circuit breaker GV2 ME can be supplied with lugs or spring terminal connections.
Spring terminal connections ensure secure, permanent and durable clamping that is resistant to harsh environments, vibration and impact and are even more effective when conductors without cable ends are used. Each connection can take two independent conductors.

GV3

GV3 circuit breakers feature connection by BTR screws (hexagon socket head), tightened using a n° 4 Allen key.
This type of connection uses the **Ever**Link® system with creep compensation (1) (Schneider Electric patent).
This technique makes it possible to achieve accurate and durable tightening torque, in order to avoid cable creep.

GV3 circuit breakers are also available with connection by lugs. This type of connection meets the requirements of certain Asian markets and is suitable for applications subject to strong vibration, such as railway transport.

GV7

GV7 circuit breakers: with connection by screw clamp terminals (for bars and lugs) and by clip-on connectors.

Operation

Control is manual and local when the motor circuit breaker is used on its own.
Control is automatic and remote when it is associated with a contactor.

GV2 ME and GV3 ME80

Pushbutton control.
Energisation is controlled manually by operating the Start button “I” 1.
De-energisation is controlled manually by operating the Stop button “O” 2, or automatically by the thermal-magnetic protection elements or by a voltage trip attachment.

GV2 P, GV3 P and GV7 R

- Control by rotary knob: for GV2 P and GV3 P
- Control by rocker lever: for GV7 R.

Energisation is controlled manually by moving the knob or rocker lever to position “I” 1.
De-energisation is controlled manually by moving the knob or rocker lever to position “O” 2.
De-energisation due to a fault automatically places the knob or rocker lever in the “Trip” position 3.
Re-energisation is possible only after having returned the knob or rocker lever to position “O”.

(1) Creep: normal crushing phenomenon of copper conductors, that is accentuated over time.

Characteristics: pages B6/51 to B6/56
References: pages B6/4 to B6/9
Dimensions and schemes: pages B6/70 to B6/83

TeSys protection components
Thermal-magnetic motor circuit breakers GV2, GV3 and GV7

Presentation

Protection of motors and personnel

Motor protection is provided by the thermal-magnetic protection elements incorporated in the motor circuit breaker.

The **magnetic** elements (short-circuit protection) have a non-adjustable tripping threshold, which is equal to 13 times the maximum setting current of the thermal trips.

The **thermal** elements (overload protection) include automatic compensation for ambient temperature variations.
The rated operational current of the motor is displayed by means of a graduated knob **4**.
Personnel protection is also provided. All live parts are protected against direct finger contact from the front panel.

The addition of an undervoltage trip allows the circuit breaker to be de-energised in the event of an undervoltage condition. The user is therefore protected against sudden starting of the machine when normal voltage is restored, since the Start button “I” has to be pressed to restart the motor.

With the addition of a shunt trip, de-energisation of the unit can be remotely controlled.
The operators on both open-mounted and enclosed motor circuit breakers can be locked in the Stop position “O” by up to 4 padlocks.

Because they are suitable for isolation, these circuit breakers, in the open position, provide an adequate isolation distance and indicate the actual position of the moving contacts by the position of the operators.

Special features

These motor circuit breakers are easily installed in any configuration thanks to their universal fixing arrangement: screw fixing or clip-on mounting on symmetrical, asymmetrical or combination rails.

Characteristics: pages B6/51 to B6/56
References: pages B6/4 to B6/9
Dimensions and schemes: pages B6/70 to B6/83

TeSys protection components
Thermal-magnetic motor circuit breakers

TeSys GV

Environment

Circuit breaker type				GV2 ME	GV2 P	GV3 P	GV3 ME80	GV7 R
Conforming to standards				IEC 60947-1, 60947-2, 60947-4-1, EN 60204, UL 508, CSA C 22.2 n° 14-05, NF C 63-650, 63-120, 79-130, VDE 0113, 0660		IEC/EN 60947-1, 60947-2, 60947-4-1, UL 508 type E, CSA C 22.2 n° 14-05 type E	IEC/EN, NF EN, BS EN, DIN EN 60947-2, 60947-4-1	IEC 60947-1, 60947-2, 60947-4-1, EN 60947-1, 60947-2, EN 60947-4-1, NF C 63-650, NF C 63-120, 79-130, VDE 0113, 0660
Product certifications				UL, CSA, CCC, CEBEC, GOST, TSE, BV, GL, LROS , DNV, PTB, EZU, SETI, RINA, ATEX	UL (1), CSA, PTB, EZU, GOST, TSE, DNV, LROS, GL, BV, RINA, CCC, ATEX	UL, CSA, CCC (pending), GOST, ATEX, GL, BV, LROS (DNV, RINA pending)	UL, CSA, LROS	UL, DNV
Protective treatment				"TH"		"TH"	"TC"	"TC"
Degree of protection (front face)	Conforming to IEC 60529	Open mounted		Against direct finger contact: IP20		Against direct finger contact: IP20	Against direct finger contact: IP20	IP405 with terminal shrouds
		In enclosure		**GV2 M●01**: IP41 **GV2 M●02**: IP55	–	**GV3 PC01** and **GV3 PC02**: IP55	**GV3 CE01**: IP55	–
Shock resistance	Conforming to IEC 60068-2-27			30 gn -11 ms		On: 15 gn -11 ms Off: 30 gn -11 ms	22 gn - 20 ms	15 gn -11 ms
Vibration resistance	Conforming to IEC 60068-2-6			5 gn (5…150 Hz)		4 gn (5…300 Hz)	2.5 gn (0…25 Hz)	2.5 gn (25 Hz)
Ambient air temperature	Storage		**°C**	-40…+80	-40…+80	-40…+80	-40…+80	-55…+95
	Operation	Open mounted	**°C**	-20…+60	-20…+60	-20…+60 (2)	-20…+60	-25… +70
		In enclosure	**°C**	-20…+40	-20…+40	-20…+40	-20…+40	–
Temperature compensation		Open mounted	**°C**	-20…+60	-20…+60	-20…+60	-20…+60	-25… +55 (3)
		In enclosure	**°C**	-20…+40	-20…+40	-20…+40	-20…+40	–
Flame resistance	Conforming to IEC 60695-2-1		**°C**	960		960	960	960
Maximum operating altitude			**m**	2000		3000	3000	2000
Suitable for isolation	Conforming to IEC 60947-1 § 7-1-6			Yes		Yes	–	Yes
Resistance to mechanical impact			**J**	0.5	0.5	10	0.5	0.5
				IK04		IK09 (in enclosure)	–	–
Sensitivity to phase failure				Yes, conforming to IEC 60947-4-1 § 7-2-1-5-2				

Technical characteristics

Circuit breaker type			GV2 ME	GV2 P	GV2 RT	GV3 P	GV3 ME80	GV7 R●20... R●100	GV7 R●150	GV7 R●220
Utilisation category	Conforming to IEC 60947-2		A			A	A	A		
	Conforming to IEC 60947-4-1		AC-3			AC-3	AC-3	AC-3		
Rated operational voltage (Ue)	Conforming to IEC 60947-2	**V**	690			690	690	690		
Rated insulation voltage (Ui)	Conforming to IEC 60947-2	**V**	690			690	690	750		
Rated voltage	Conforming to CSA C22-2 n° 14, UL 508	**V**	600			600	600 (B600)	600		
Rated operational frequency	Conforming to IEC 60947-4-1 UL, CSA	**Hz**	50/60			50/60	50/60	50/60		
Rated impulse withstand voltage (U imp)	Conforming to IEC 60947-2	**kV**	6			6	6	8		
Total power dissipated per pole		**W**	2.5			8	8	5	8.7	14.5
Mechanical durability (C.O.: Close, Open)		**C.O.**	100 000			50 000	30 000	50 000	40 000	20 000
Electrical durability for AC-3 duty	440 V In/2	**C.O.**	100 000			–	30 000	50 000	40 000	20 000
	440 V In	**C.O.**	–			50 000	–	30 000	20 000	10 000
Duty class (maximum operating rate)		**C.O./h**	25			25	25	25		
Maximum conventional rated thermal current (Ith)	Conforming to IEC 60947-4-1	**A**	0.16… 32	0.16… 32	0.40… 23	13… 65	80	12… 100	150	220
Rated duty	Conforming to IEC 60947-4-1		Continuous duty							

*(1) UL 508 type E for **GV2 P●●H7**.*
(2) Leave a space of 9 mm between 2 circuit breakers: either an empty space, or side mounting add-on contact blocks. Side by side mounting is possible up to 40 °C.
(3) For operation up to 70 °C, please consult your Regional Sales Office.

References: pages B6/4 to B6/9
Dimensions: pages B6/70 to B6/81
Schemes: pages B6/82 and B6/83

TeSys protection components
Thermal-magnetic motor circuit breakers

TeSys GV

Mounting characteristics

Operating position
Without derating, in relation to normal vertical mounting plane (1)

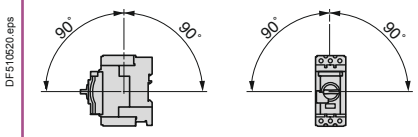

Connection characteristics

Connection to screw clamp terminals or spring terminals

Bare cables

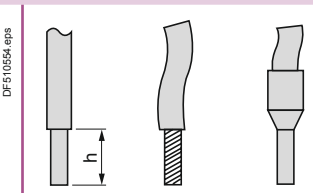

Circuit breaker type			GV2 ME		GV2 P		GV3 P		GV3 ME80	
			Min.	Max.	Min.	Max.	Min.	Max.	Min.	Max.
Connection to screw clamp terminals (2) (Max. number of conductors x c.s.a.)	Solid cable	mm²	2 x 1	2 x 6	2 x 1	2 x 6	2 x 1	1 x 25 and 1 x 35	1 x 2.5	1 x 35
	Flexible cable without cable end	mm²	2 x 1.5	2 x 6	2 x 1.5	2 x 6	2 x 1	1 x 25 and 1 x 35	1 x 2.5	2 x 16
	Flexible cable with cable end	mm²	2 x 1	2 x 4	2 x 1	2 x 4	2 x 1	1 x 25 and 1 x 35	1 x 2.5	2 x 16
Tightening torque		N.m	1.7	1.7	1.7	1.7	5	5: 25 mm² 8: 35 mm²	5	5
Connection to spring terminals Number of conductors x c.s.a.	Solid cable	mm²	2 x 1 (3)	2 x 6	–	–	–	–	–	–
	Flexible cable without cable end	mm²	2 x 1.5 (3)	2 x 4	–	–	–	–	–	–

Connection by bars or lugs

Bars or lugs

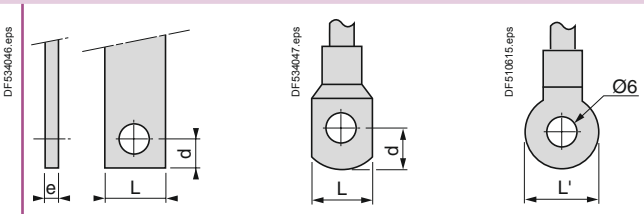

Circuit breaker type			GV2 ME●●6	GV3 P●●6	GV7 R●20...R●100	GV7 R●150	GV7 R●220
Pitch	Without spreaders	mm	13.5	17.5	35	35	35
	With spreaders	mm	–	–	45	45	45
Bars or cables with lugs	e	mm	≤ 6	≤ 6	≤ 6	≤ 6	≤ 6
	L	mm	≤ 9.5	≤ 13.5	≤ 25	≤ 25	≤ 25
	L'	mm	≤ 9.5	≤ 16.5	–	–	–
	d	mm	≤ 10	≤ 10	≤ 10	≤ 10	≤ 10
Screws			M4	M6	M6	M8	M8
	Tightening torque	N.m	1.7	6	10	15	15
Bare cables (copper or aluminium) with connectors	Height (h)	mm	–	–	20	20	20
	C.s.a.	mm²	–	–	1.5...95	1.5...95	1.5...185
	Tightening torque	N.m	–	–	15	15	15

(1) When mounting on a vertical rail, fit a stop to prevent any slippage.
*(2) For motor circuit breakers **GV3 P**: BTR hexagon socket head screws, **Ever**Link® system. Require use of an insulated Allen key, in compliance with local electrical wiring regulations.*
*(3) For cross-sections 1 to 1.5 mm², the use of an **LA9 D99** cable end reducer is recommended.*

References: pages B6/4 to B6/9
Dimensions: pages B6/70 to B6/81
Schemes: pages B6/82 and B6/83

Breaking capacity of GV2 ME and GV2 P

Circuit breaker type				GV2 ME									GV2 P								
				01 to 06	07	08	10	14	16	20	21 & 22	32	01 to 06	07	08	10	14	16	20	21 & 22	32
Rating			A	0.1 to 1.6	2.5	4	6.3	10	14	18	23 & 25	32	0.1 to 1.6	2.5	4	6.3	10	14	18	23 & 25	32
Breaking capacity conforming to IEC 60947-2	230/240 V	Icu	kA	★	★	★	★	★	★	★	50	50	★	★	★	★	★	★	★	★	★
		Ics % (1)		★	★	★	★	★	★	★	100	100	★	★	★	★	★	★	★	★	★
	400/415 V	Icu	kA	★	★	★	★	★	15	15	15	10	★	★	★	★	★	★	50	50	50
		Ics % (1)		★	★	★	★	★	50	50	40	50	★	★	★	★	★	★	50	50	50
	440 V	Icu	kA	★	★	★	50	15	8	8	6	6	★	★	★	★	★	50	20	20	20
		Ics % (1)		★	★	★	100	100	50	50	50	50	★	★	★	★	★	75	75	75	75
	500 V	Icu	kA	★	★	★	50	10	6	6	4	4	★	★	★	★	50	42	10	10	10
		Ics % (1)		★	★	★	100	100	75	75	75	75	★	★	★	★	100	75	75	75	75
	690 V	Icu	kA	★	3	3	3	3	3	3	3	3	★	8	8	6	6	6	4	4	4
		Ics % (1)		★	75	75	75	75	75	75	75	75	★	100	100	100	100	100	100	100	100
Associated fuses (if required) if Isc > breaking capacity Icu conforming to IEC 60947-2	230/240 V	aM	A	★	★	★	★	★	★	★	80	80	★	★	★	★	★	★	★	★	★
		gG	A	★	★	★	★	★	★	★	100	100	★	★	★	★	★	★	★	★	★
	400/415 V	aM	A	★	★	★	★	★	63	63	80	80	★	★	★	★	★	★	100	100	100
		gG	A	★	★	★	★	★	80	80	100	100	★	★	★	★	★	★	125	125	125
	440 V	aM	A	★	★	★	50	50	50	50	63	63	★	★	★	★	★	50	63	80	80
		gG	A	★	★	★	63	63	63	63	80	80	★	★	★	★	★	63	80	100	100
	500 V	aM	A	★	★	★	50	50	50	50	50	50	★	★	★	★	50	50	50	50	50
		gG	A	★	★	★	63	63	63	63	63	63	★	★	★	★	63	63	63	63	63
	690 V	aM	A	★	16	25	32	32	40	40	40	40	★	20	25	40	40	50	50	50	50
		gG	A	★	20	32	40	40	50	50	50	50	★	25	32	50	50	63	63	63	63

★ > 100 kA.
(1) As % of Icu.

TeSys protection components
Thermal-magnetic motor circuit breakers GV2 ME and GV2 P

TeSys GV

Breaking capacity of GV2 ME and GV2 P (used in association with current limiter GV1 L3)

Circuit breaker type				GV2 ME									
				01 to 06	07	08	10	14	16	20	21	22	32
Rating			A	0.1 to 1.6	2.5	4	6.3	10	14	18	23	25	32
Breaking capacity conforming to IEC 60947-2	230/240 V	Icu	kA	★	★	★	★	★	★	★	★	★	★
		Ics % (1)		★	★	★	★	★	★	★	★	★	★
	400/415 V	Icu	kA	★	★	★	★	★	100	100	100	100	100
		Ics % (1)		★	★	★	★	★	50	50	40	40	40
	440 V	Icu	kA	★	★	★	★	★	50	20	20	20	20
		Ics % (1)		★	★	★	★	★	75	75	75	75	75
	500 V	Icu	kA	★	★	★	★	50	42	10	10	10	10
		Ics % (1)		★	★	★	★	100	100	75	75	75	75

Circuit breaker type				GV2 P									
				01 to 06	07	08	10	14	16	20	21	22	32
Rating			A	0.1 to 1.6	2.5	4	6.3	10	14	18	23	25	32
Breaking capacity conforming to IEC 60947-2	230/240 V	Icu	kA	★	★	★	★	★	★	★	★	★	★
		Ics % (1)		★	★	★	★	★	★	★	★	★	★
	400/415 V	Icu	kA	★	★	★	★	★	★	★	★	★	★
		Ics % (1)		★	★	★	★	★	★	★	★	★	★
	440 V	Icu	kA	★	★	★	★	★	100	100	100	100	100
		Ics % (1)		★	★	★	★	★	50	50	50	50	50
	500 V	Icu	kA	★	★	★	★	100	100	100	100	100	100
		Ics % (1)		★	★	★	★	50	50	50	50	50	50
	690 V (3)	Icu = Ics	kA	★	50	50	50	50	50	50	50	50	50

Circuit breaker type				GV2 ME									
				01 to 06	07	08	10	14	16	20	21	22	32
Rating			A	0.1 to 1.6	2.5	4	6.3	10	14	18	23	25	32
Cable protection against thermal stress in the event of short-circuit (PVC insulated copper cables)	Minimum c.s.a. protected at 40 °C at Isc max.	1 mm²		●	●	●	⩽ 10 kA	⩽ 6 kA	(2)	(2)	(2)	(2)	(2)
		1.5 mm²		●	●	●	⩽ 20 kA	⩽ 10 kA	(2)	(2)	(2)	(2)	(2)
		2.5 mm²		●	●	●	●	●	●	●	●	●	(2)
		4…6 mm²		●	●	●	●	●	●	●	●	●	●

★ *> 100 kA.*
● *Cable c.s.a. protected.*
(1) As % of Icu.
(2) Cable c.s.a. not protected.
(3) With limiter LA9 LB920.

References: pages B6/4 to B6/6
Dimensions: pages B6/70 to B6/75
Schemes: page B6/82

Breaking capacity of GV3 P and GV3 ME80

Motor circuit breaker type				GV3 P							GV3 ME80
				13	18	25	32	40	50	65	
Rating			A	13	18	25	32	40	50	65	80
Breaking capacity conforming to IEC 60947-2	230/240 V	Icu	kA	100	100	100	100	100	100	100	100
		Ics % (1)		100	100	100	100	100	100	100	100
	400/415 V	Icu	kA	100	100	100	100	50	50	50	15
		Ics % (1)		100	100	100	100	100	100	100	50
	440 V	Icu	kA	50	50	50	50	50	50	50	10
		Ics % (1)		100	100	100	100	100	100	100	60
	500 V	Icu	kA	12	12	12	12	12	12	12	4
		Ics % (1)		50	50	50	50	50	50	50	100
	690 V	Icu	kA	6	6	6	6	6	6	6	2
		Ics % (1)		50	50	50	50	50	50	50	100
Associated fuses, if required if Isc > breaking capacity Icu	230/240 V	aM	A	★	★	★	★	★	★	★	★
		gG	A	★	★	★	★	★	★	★	★
	415 V	aM	A	★	★	★	★	125	125	125	315
		gG	A	★	★	★	★	160	160	160	400
	440 V	aM	A	63	80	125	125	125	125	125	315
		gG	A	80	100	160	160	160	160	160	400
	500 V	aM	A	63	63	63	63	80	80	80	200
		gG	A	80	80	80	80	100	100	100	250
	690 V	aM	A	50	50	50	50	63	63	63	200
		gG	A	63	63	63	63	80	80	80	250

★ *Fuse not required: breaking capacity Icn > Isc.*
(1) As % of Icu.

TeSys protection components
Thermal-magnetic motor circuit breakers GV7 R

Breaking capacity of GV7 R

Circuit breaker type				GV7					
				RE20…RE100	RS20…RS100	RE150	RS150	RE220	RS220
Rating			A	12…20 to 60…100		90…150	90…150	132…220	132…220
Breaking capacity conforming to IEC 60947-2	230/240 V	Icu	kA	85	100	85	100	85	100
		Ics % (1)		100	100	100	100	100	100
	400/415 V	Icu	kA	36	70	35	70	35	70
		Ics % (1)		100	100	100	100	100	100
	440 V	Icu	kA	36	65	35	65	35	65
		Ics % (1)		100	100	100	100	100	100
	500 V	Icu	kA	18	50	30	50	30	50
		Ics % (1)		100	100	100	100	100	100
	690 V	Icu	kA	8	10	8	10	8	10
		Ics % (1)		100	100	100	100	100	100
Cable protection against thermal stress in the event of short-circuit (PVC insulated copper cables)	Minimum c.s.a. protected at 40 °C at Isc max.	4 mm²		⩽ 6 kA	⩽ 6 kA	(2)	(2)	(2)	(2)
		6 mm²		●	⩽ 25 kA	(2)	(2)	(2)	(2)
		10…50 mm²		●	●	●	●	●	●

(1) As % of Icu.
● Cable c.s.a. protected.
(2) Cable c.s.a. not protected.

References: page B6/7
Dimensions: pages B6/79 to B6/81
Schemes: page B6/83

Thermal-magnetic tripping curves for GV2 ME and GV2 P

Average operating times at 20 °C related to multiples of the setting current

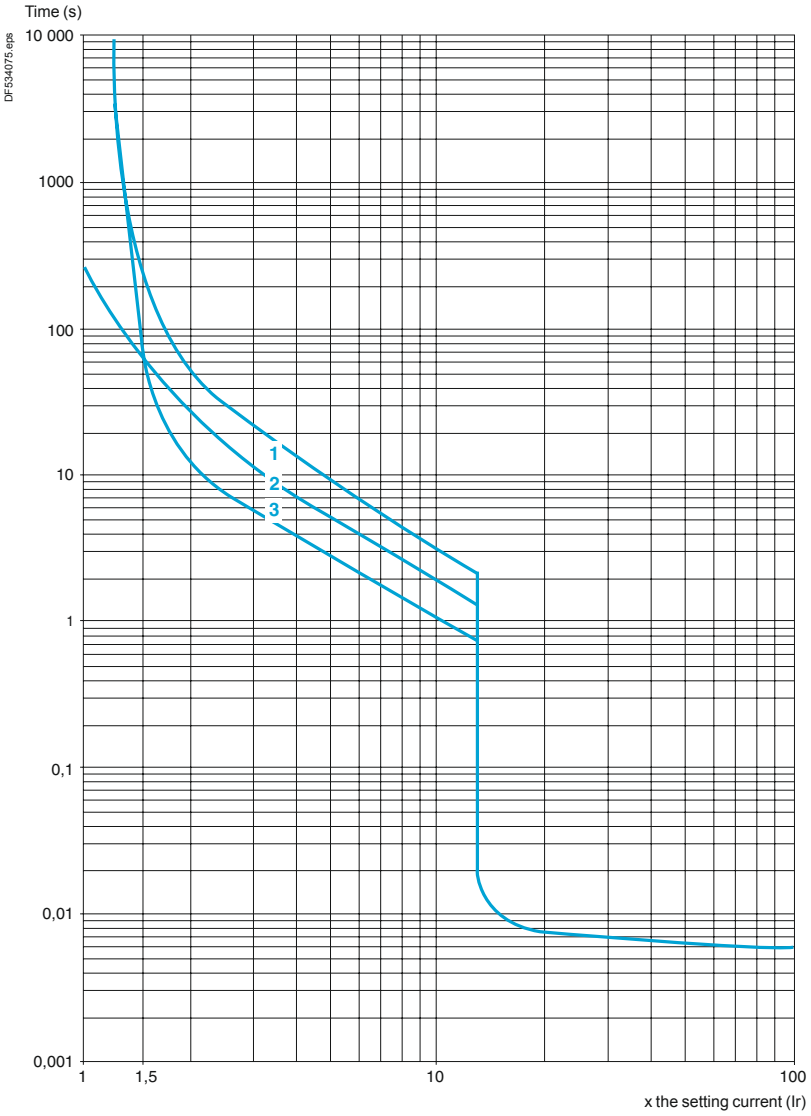

1 3 poles from cold state
2 2 poles from cold state
3 3 poles from hot state

References:
pages B6/4 to B6/6

Dimensions:
pages B6/70 to B6/75

Schemes:
page B6/82

Current limitation on short-circuit for GV2 ME and GV2 P (3-phase 400/415 V)

Dynamic stress

I peak = f (prospective Isc) at 1.05 Ue = 435 V

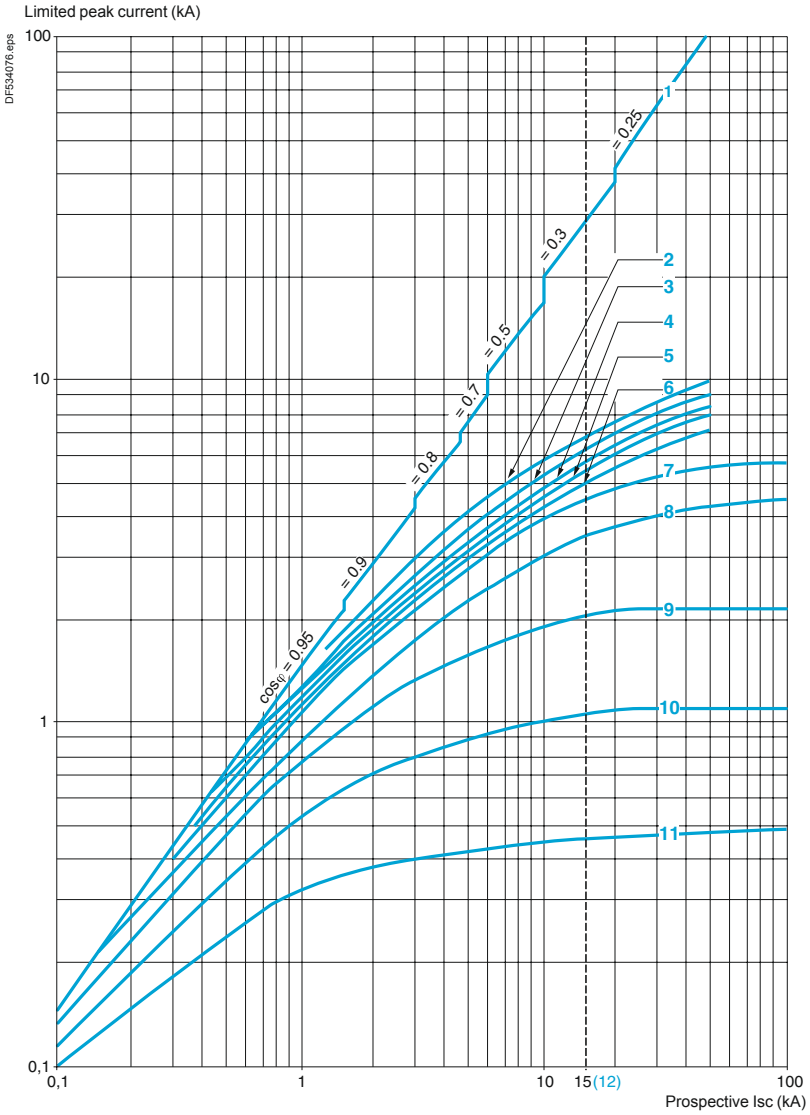

1 Maximum peak current
2 24 -32 A
3 20 -25 A
4 17 -23 A
5 13 -18 A
6 9 -14 A
7 6 -10 A
8 4 -6.3 A
9 2.5 -4 A
10 1.6 -2.5 A
11 1 -1.6 A
12 Limit of rated ultimate breaking capacity on short-circuit of GV2 ME (14, 18, 23 and 25 A ratings)

References:
pages B6/4 to B6/6

Dimensions:
pages B6/70 to B6/75

Schemes:
page B6/82

Thermal limit on short-circuit for GV2 ME

Thermal limit in kA²s in the magnetic operating zone

Sum of I²dt = f (prospective Isc) at 1.05 Ue = 435 V

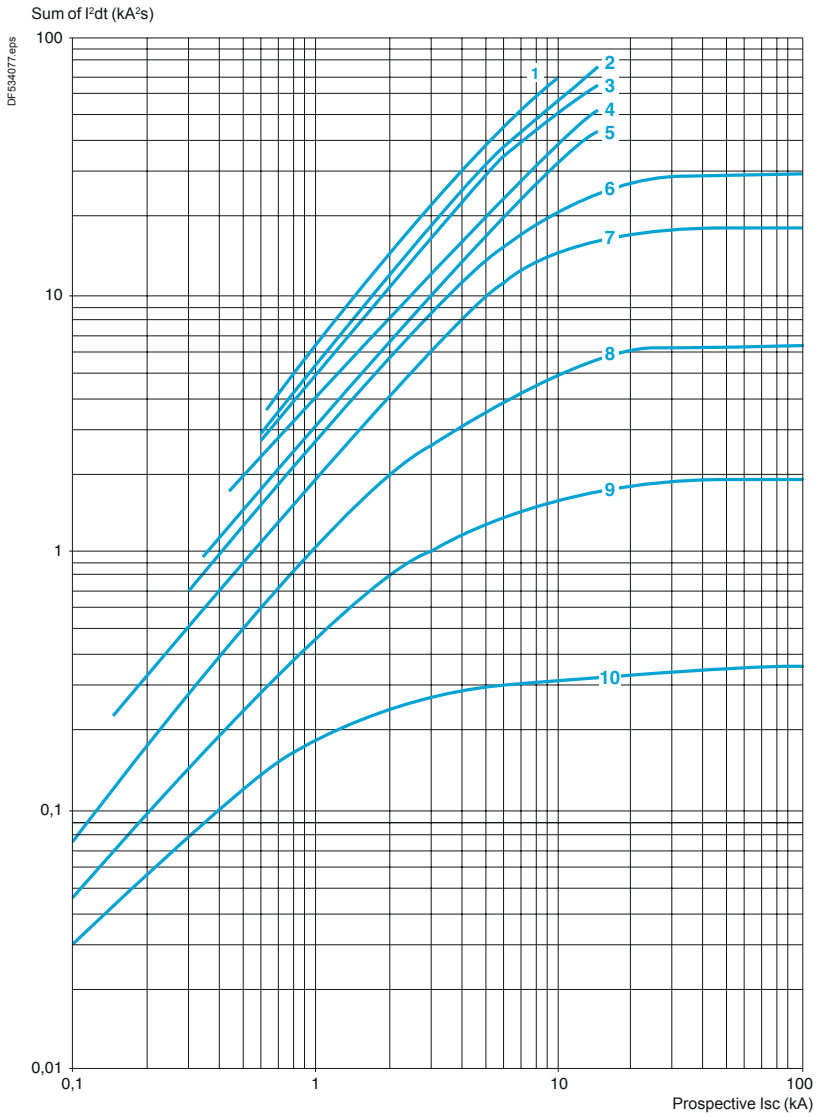

1 24 -32 A
2 20 -25 A
3 17 -23 A
4 13 -18 A
5 9 -14 A
6 6 -10 A
7 4 -6.3 A
8 2.5 -4 A
9 1.6 -2.5 A
10 1 -1.6 A

Circuit breakers

TeSys protection components
Thermal-magnetic motor circuit breakers
GV2 P

TeSys GV

Thermal limit on short-circuit for GV2 P
Thermal limit in kA²s in the magnetic operating zone

Sum of I²dt = f (prospective Isc) at 1.05 Ue = 435 V

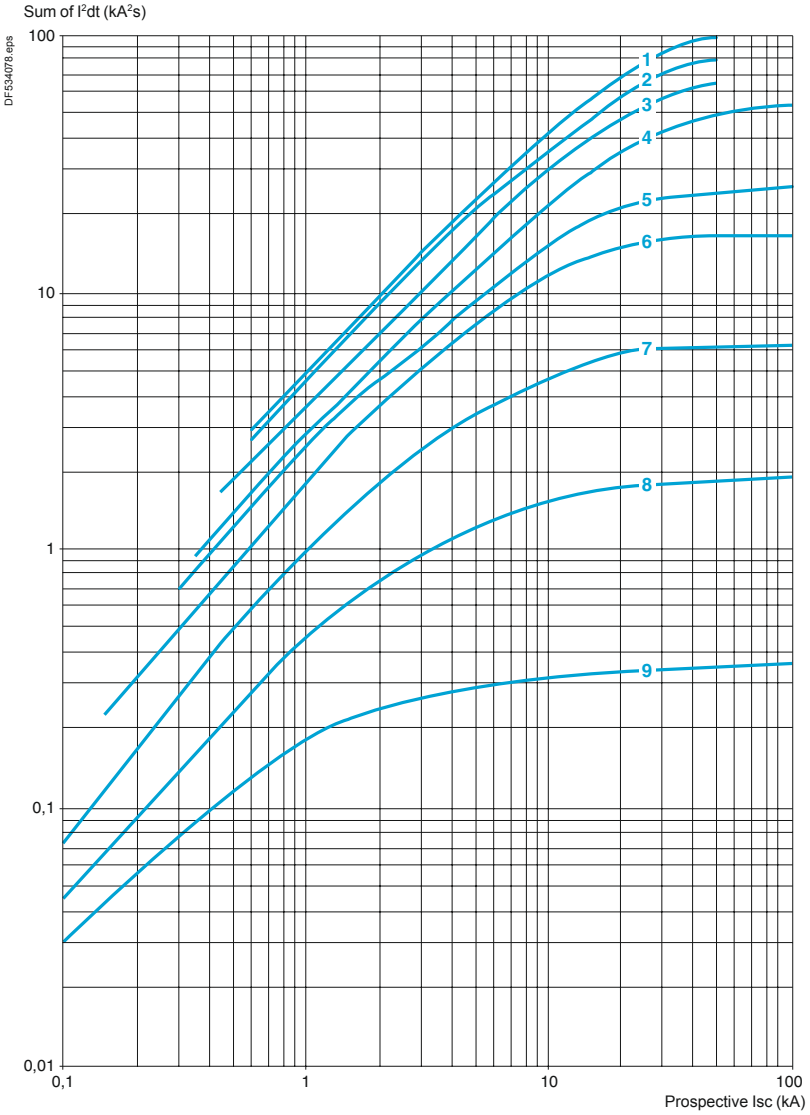

1 24 -32 A
1 20 -25 A
2 17 -23 A
3 13 -18 A
4 9 -14 A
5 6 -10 A
6 4 -6.3 A
7 2.5 -4 A
8 1.6 -2.5 A
9 1 -1.6 A

References:
pages B6/4 to B6/6

Dimensions:
pages B6/70 to B6/75

Schemes:
page B6/82

TeSys protection components
Thermal-magnetic motor circuit breakers GV3 P and GV3 ME80

Thermal-magnetic tripping curves

Average operating times at 20 °C related to multiples of the setting current

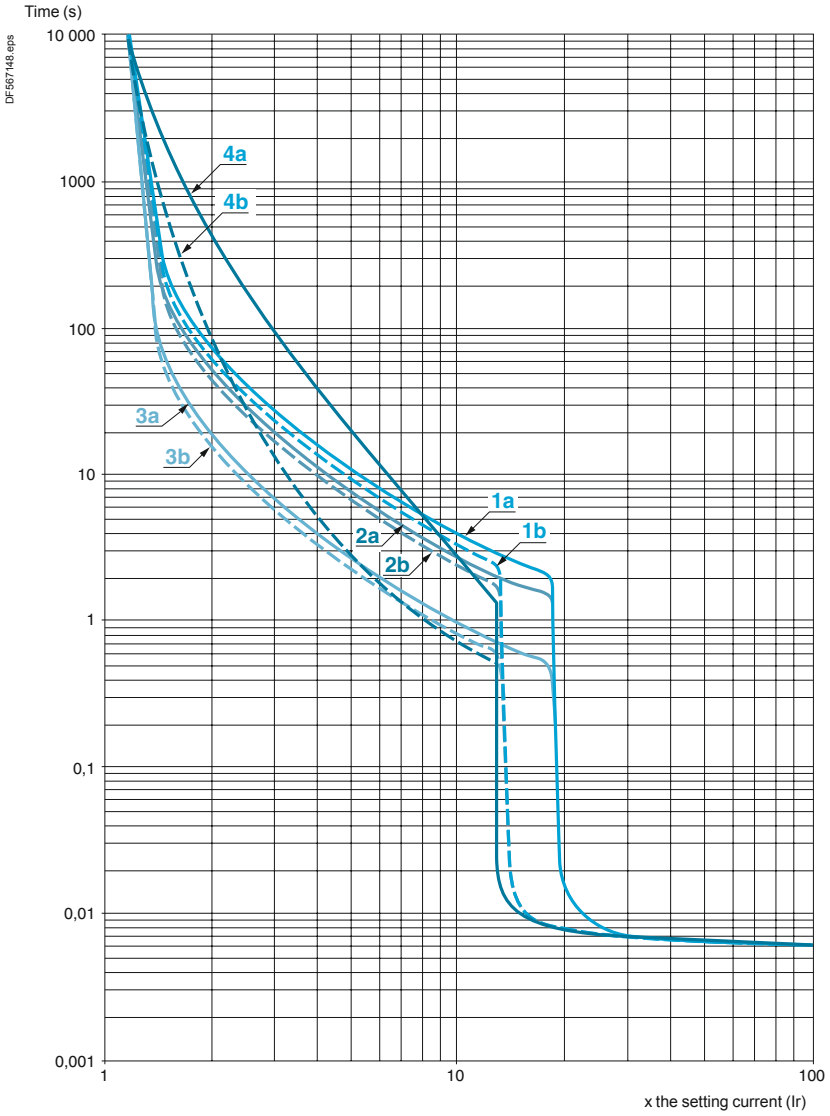

1a 3 poles from cold state (Ir mini.) : GV3 P
1b 3 poles from cold state (Ir maxi.) : GV3 P
2a 2 poles from cold state (Ir mini.) : GV3 ME80
2b 2 poles from cold state (Ir maxi.) : GV3 ME80
3a 3 poles from hot state (Ir mini.) : GV3 P
3b 3 poles from hot state (Ir maxi.) : GV3 P
4a 3 poles from hot state (Ir mini.) : GV3 ME80
4b 3 poles from hot state (Ir maxi.) : GV3 ME80

Circuit breakers

References: pages B6/4 to B6/6
Dimensions: pages B6/70 to B6/75
Schemes: page B6/82

Current limitation on short-circuit (3-phase 400/415 V)

Dynamic stress

I peak = f (prospective Isc) at 1.05 Ue = 435 V

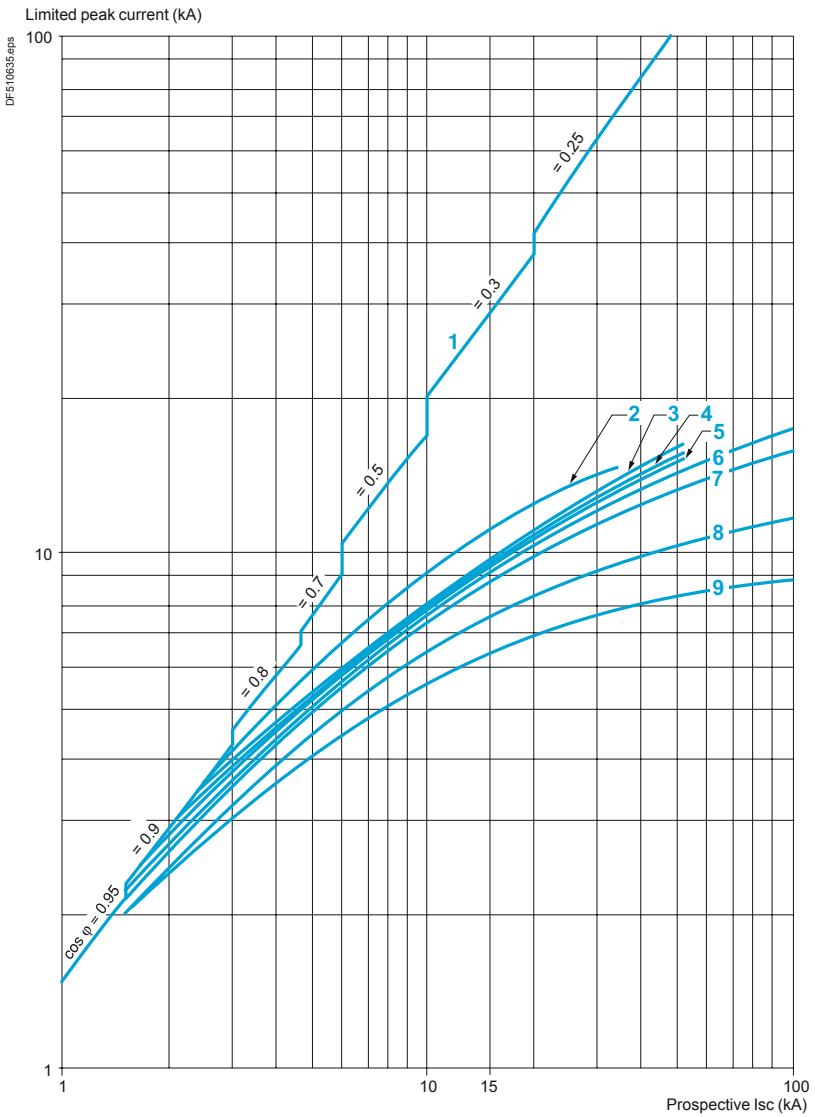

1 Maximum peak current
2 56 -80 A
3 48 -65 A
4 37 -50 A
5 30 -40 A
6 23 -32 A
7 17 -25 A
8 12 -18 A
9 9 -13 A

References:
pages B6/4 to B6/6

Dimensions:
pages B6/70 to B6/75

Schemes:
page B6/82

Maximum thermal limit on short-circuit

Thermal limit in kA²s in the magnetic operating zone

Sum of I²dt = f (prospective Isc) at 1.05 Ue = 435 V

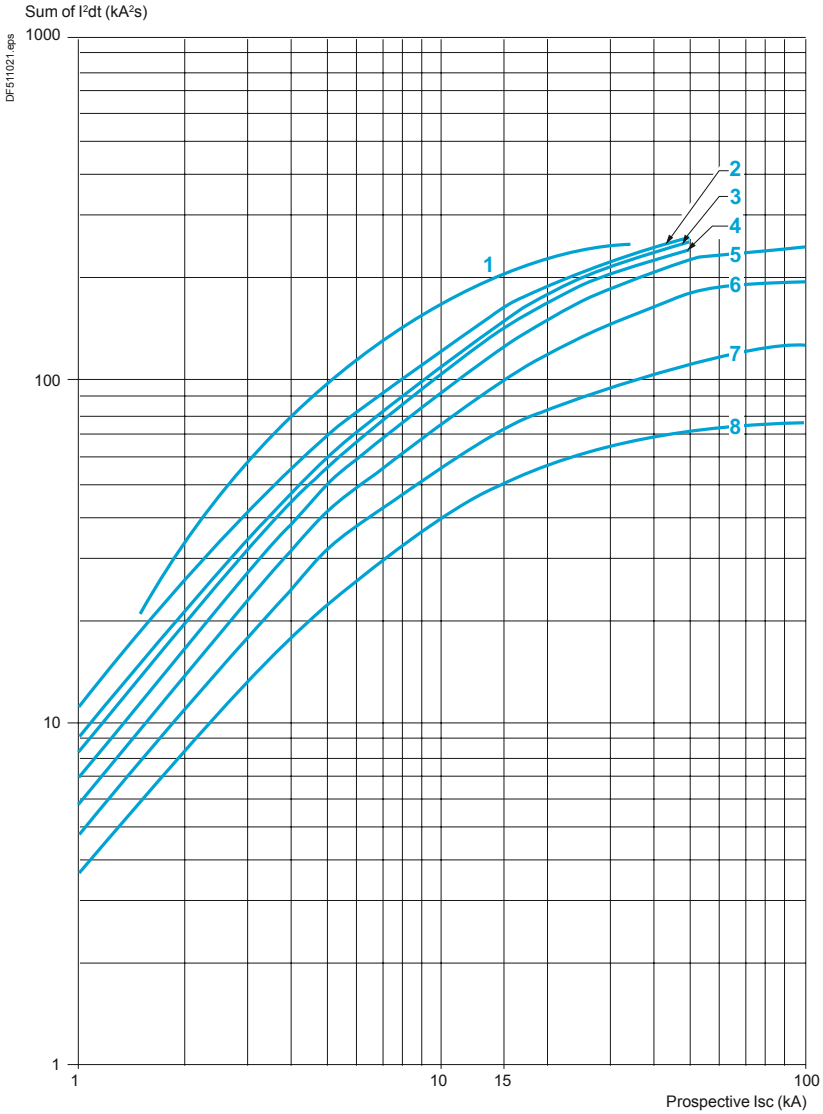

1 56-80 A (GV3 ME80)
2 48-65 A (GV3 P65)
3 37-50 A (GV3 P50)
4 30-40 A (GV3 P40)
5 23-32 A (GV3 P32)
6 17-25 A (GV3 P25)
7 12-18 A (GV3 P18)
8 9-13 A (GV3 P13)

References:
pages B6/4 to B6/6

Dimensions:
pages B6/70 to B6/75

Schemes:
page B6/82

TeSys protection components
Thermal-magnetic motor circuit breakers
GV7 R

Thermal-magnetic tripping curves for GV7 R

Average operating times at 20 °C related to multiples of the setting current

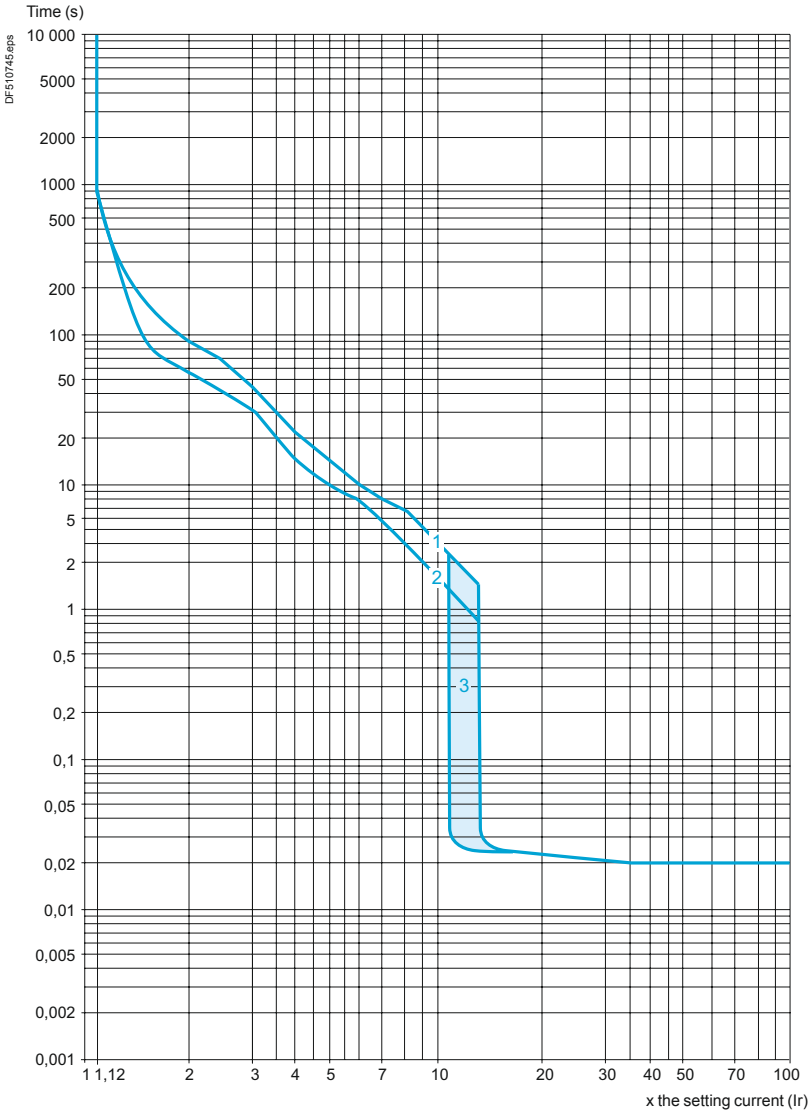

1 Cold state curve
2 Cold state curve
3 12…14 Ir
In the event of total phase failure, tripping occurs after 4 s ± 20 %

References: page B6/7
Dimensions: pages B6/79 to B6/81
Schemes: page B6/83

Current limitation on short-circuit (3-phase 400/415 V)

Dynamic stress

I peak = f (prospective Isc)

For GV7 RE only

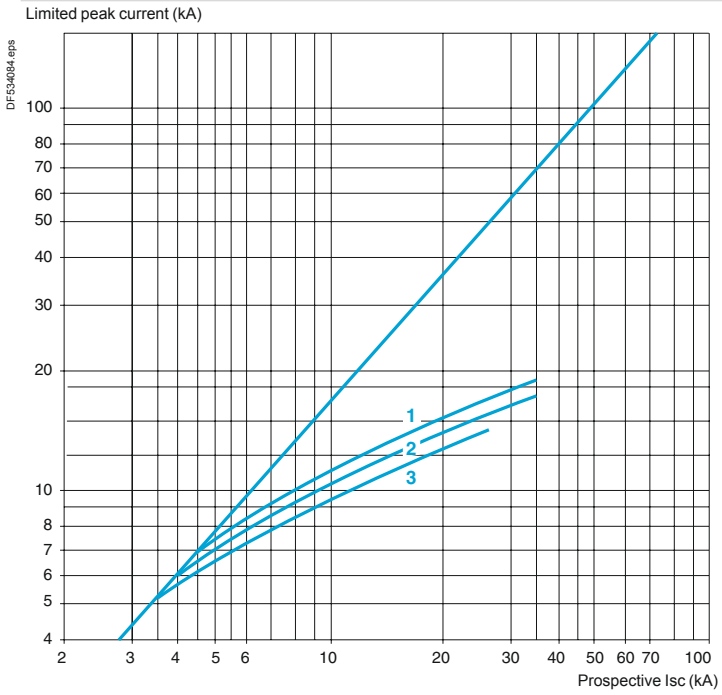

1 GV7 RE220
2 GV7 RE150
3 GV7 RE100

For GV7 RS only

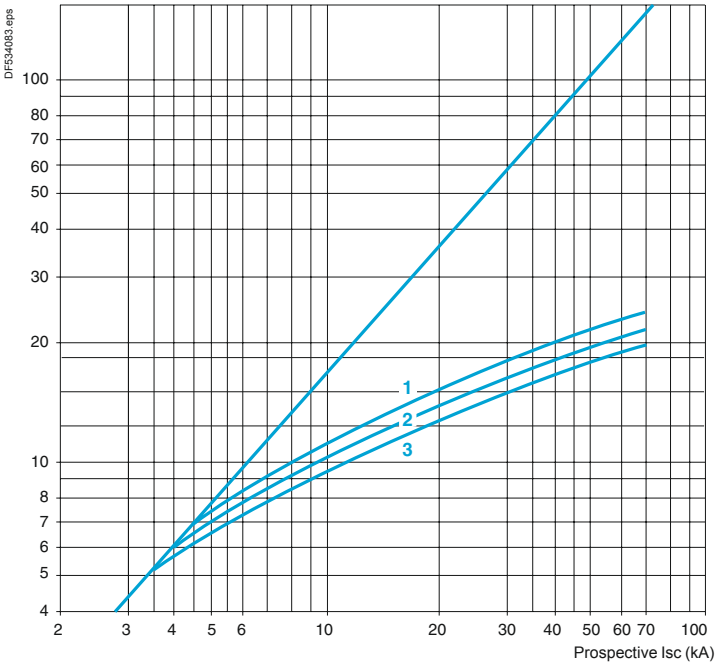

1 GV7 RS220
2 GV7 RS150
3 GV7 RS100

References:
page B6/7

Dimensions:
pages B6/79 to B6/81

Schemes:
page B6/83

Thermal limit (3-phase 400/415 V)

Thermal limit

Sum of I^2dt = f (prospective Isc)

For GV7 RE only

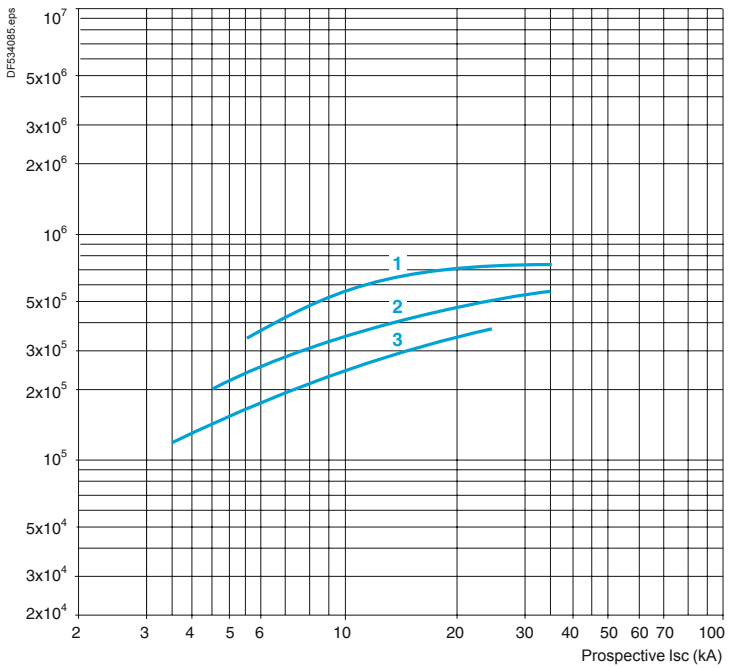

1 GV7 RE220
2 GV7 RE150
3 GV7 RE100

For GV7 RS only

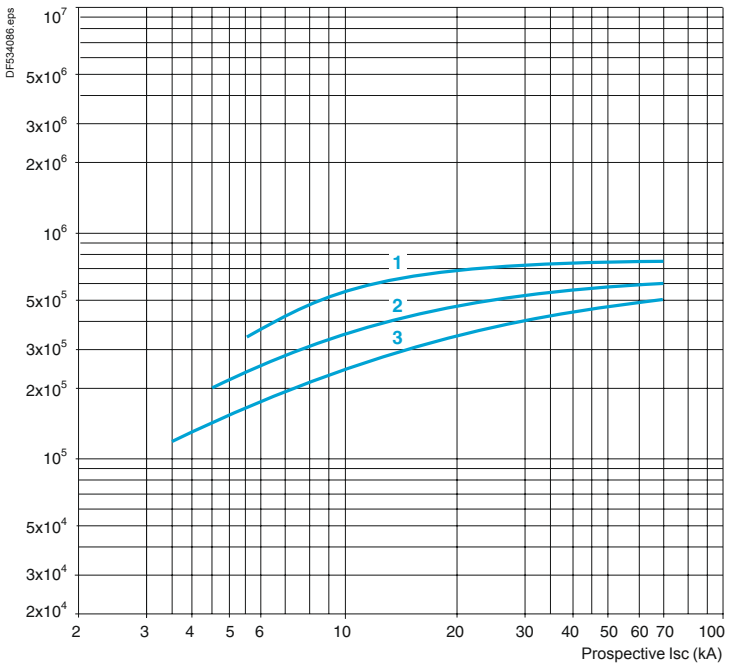

1 GV7 RS220
2 GV7 RS150
3 GV7 RS100

References:
page B6/7

Dimensions:
pages B6/79 to B6/81

Schemes:
page B6/83

Current limitation on short-circuit (3-phase 690 V)

Dynamic stress

I peak = f (prospective Isc)

For GV7 RE only

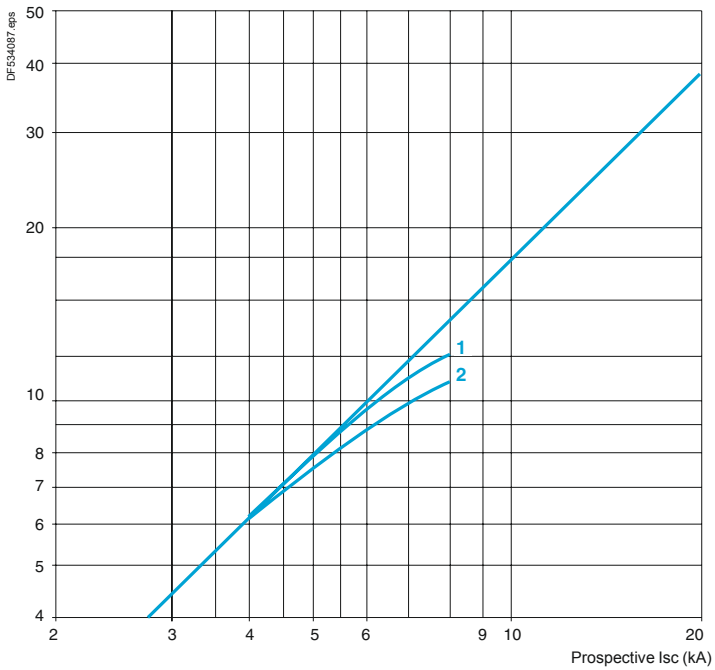

1 GV7 RE220
2 GV7 RE150 and GV7 RE100

For GV7 RS only

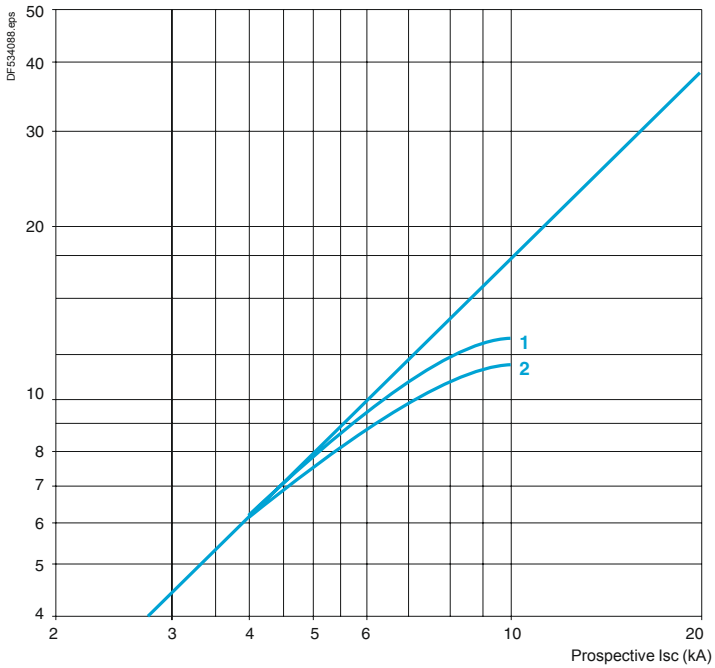

1 GV7 RS220
2 GV7 RS150 and GV7 RS100

Circuit breakers

Thermal limit on short-circuit (3-phase 690 V)

Thermal limit

Sum of I^2dt = f (prospective Isc)

For GV7 RE only

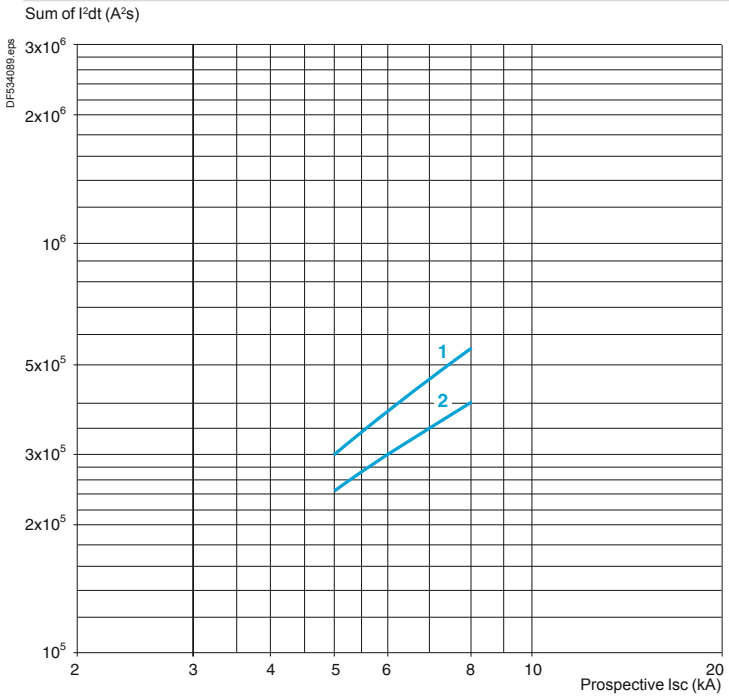

1 GV7 RE220
2 GV7 RE150 and GV7 RE100

For GV7 RS only

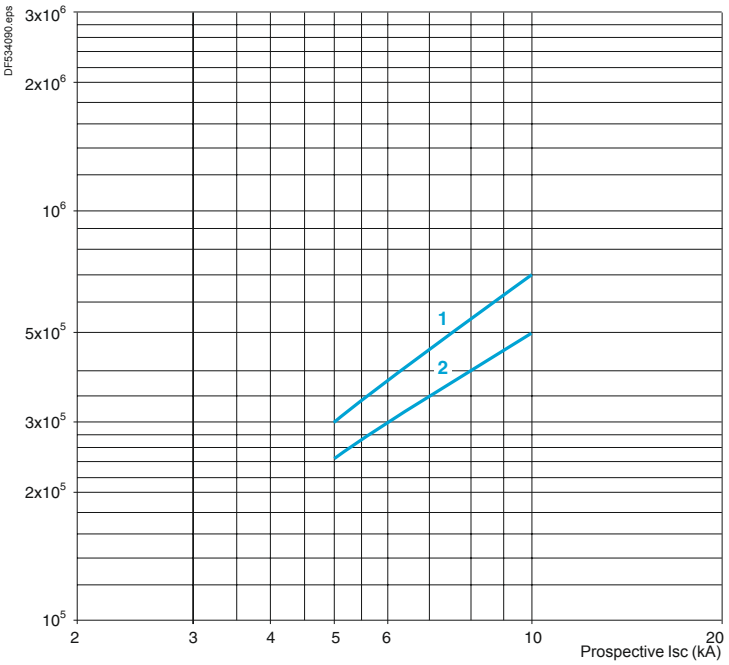

1 GV7 RS220
2 GV7 RS150 and GV7 RS100

References:
page B6/7

Dimensions:
pages B6/79 to B6/81

Schemes:
page B6/83

Thermal-magnetic tripping curves for GV2 RT

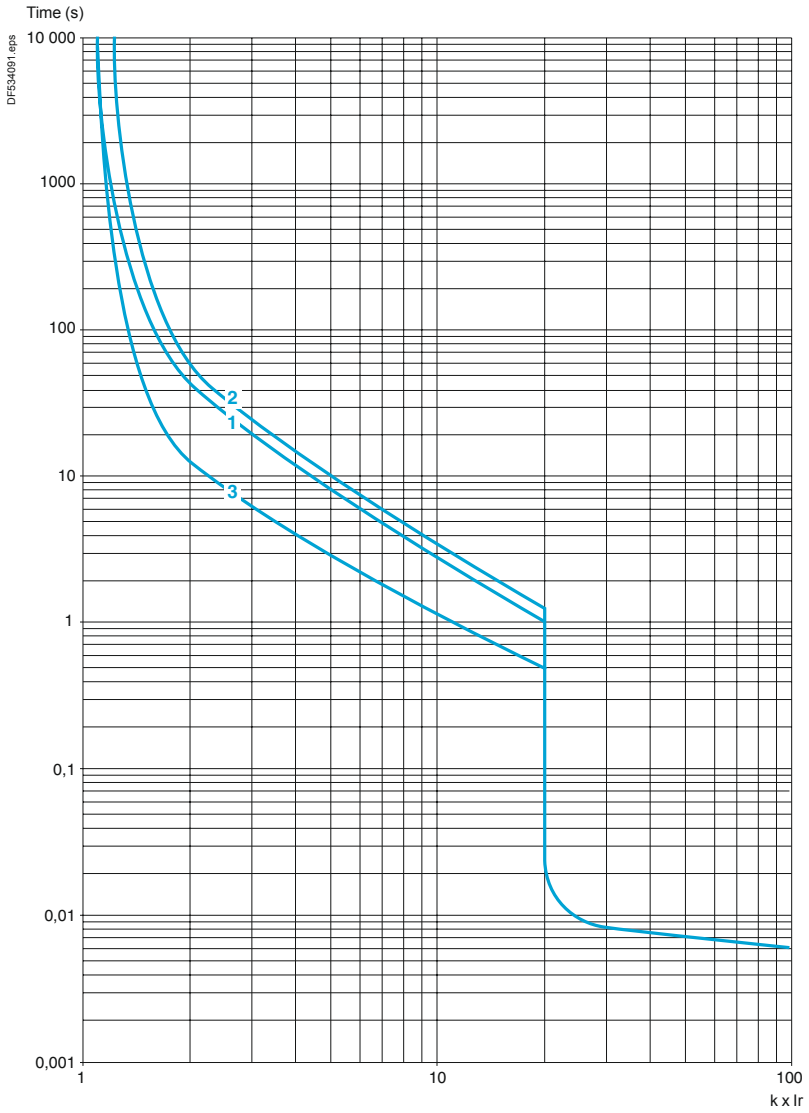

1 3 poles from cold state
2 2 poles from cold state
3 3 poles from hot state

References:
pages B6/8 and B6/9

Dimensions:
page B6/75

Schemes:
page B6/82

TeSys protection components
Thermal-magnetic motor circuit breakers GV2 ME and GV2 P

Dimensions

GV2 ME

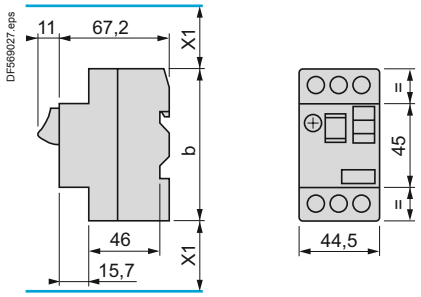

GV AX

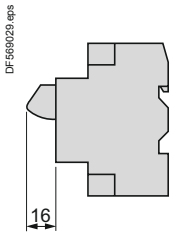

GV AD, AM, AN, AU, AS, AX

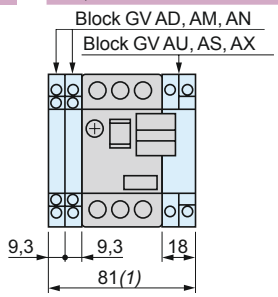

GV AE

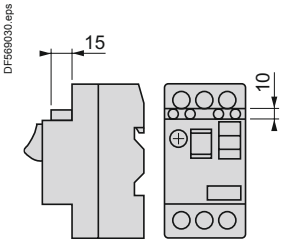

	b
GV2 ME●●	89
GV2 ME●●3	101

(1) Maximum.
X1 Electrical clearance = 40 mm for Ue ≤ 690 V

GV2 P

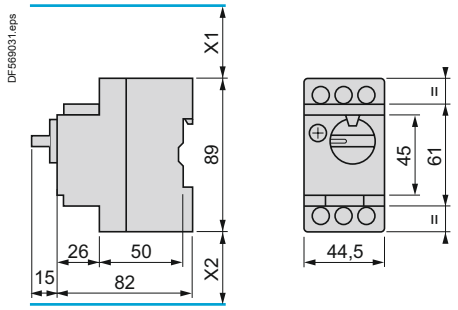

GV AD, AM, AN, AU, AS

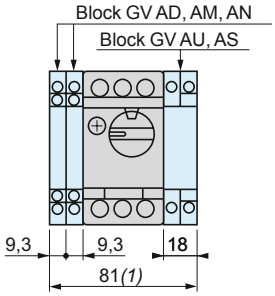

GV2 AK00

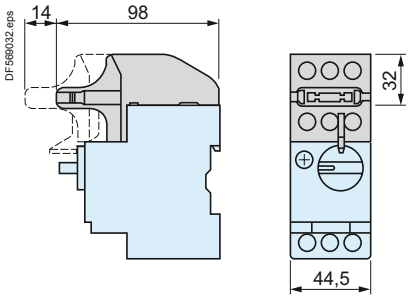

(1) Maximum.
X1 Electrical clearance = 40 mm for Ue ≤ 415 V, or 80 mm for Ue = 440 V, or 120 mm for Ue = 500 and 690 V
X2 = 40 mm

GV2 GH7

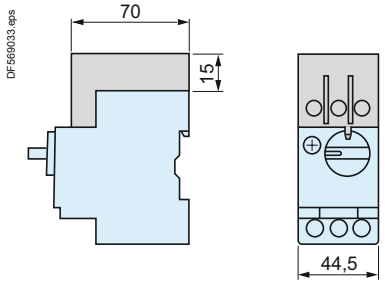

TeSys protection components
Thermal-magnetic motor circuit breakers GV2 ME and GV2 P

TeSys GV

Mounting

GV2 ME

On 35 mm ⊔ rail

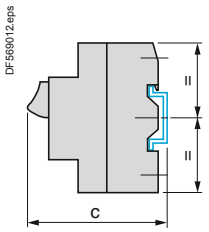

On panel with adapter plate GV2 AF02

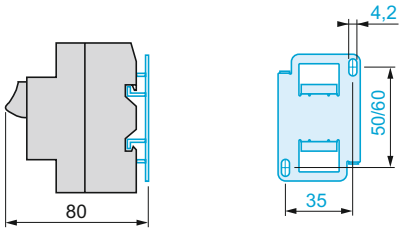

On pre-slotted plate AM1 PA

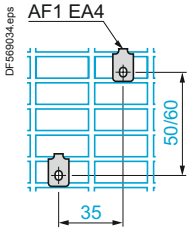

On rails DZ5 MB201

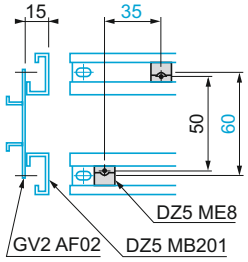

c = 78.5 on AM1 DP200 (35 x 7.5)
c = 86 on AM1 DE200, ED200 (35 x 15)

GV2 P

On rail AM1 DE200, ED200 (35 x 15)

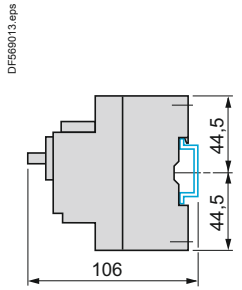

Panel mounted

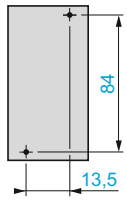

On pre-slotted plate AM1 PA

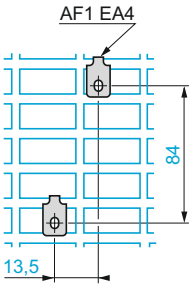

Adapter plate GK2 AF01

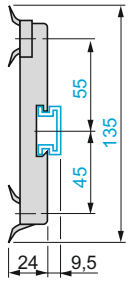

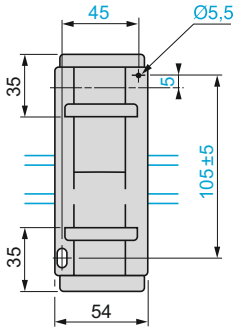

Dimensions

GV2 AF01

Combination GV2 ME + TeSys k contactor

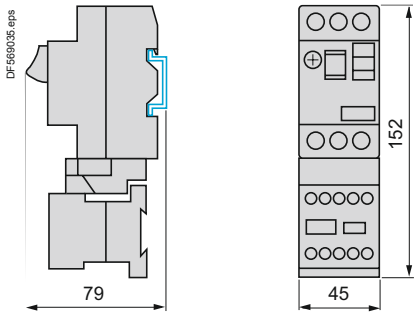

GV2 AF3

Combination GV2 ME + TeSys d contactor

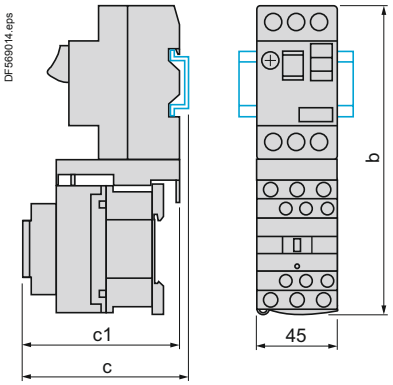

Combination GV2 P + TeSys d contactor

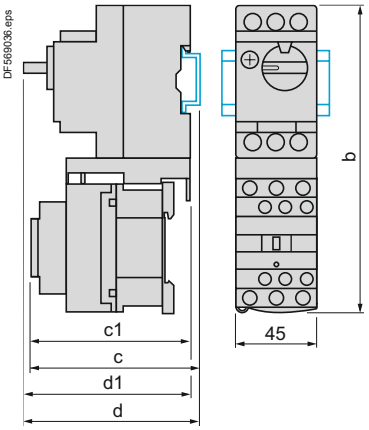

GV2 ME +	LC1 D09 …D18	LC1 D25 and D32
b	176.4	186.8
c1	94.1	100.4
c	99.6	105.9

GV2 P +	LC1 D09 …D18	LC1 D25 and D32
b	176.4	186.8
c1	100.1	106.4
c	105.6	111.9
d1	95	95
d	100.5	100.5

TeSys protection components
Thermal-magnetic motor circuit breakers GV2 ME and GV2 P

Dimensions

GV2 AF4 + LAD 311

Combination GV2 ME + TeSys d contactor

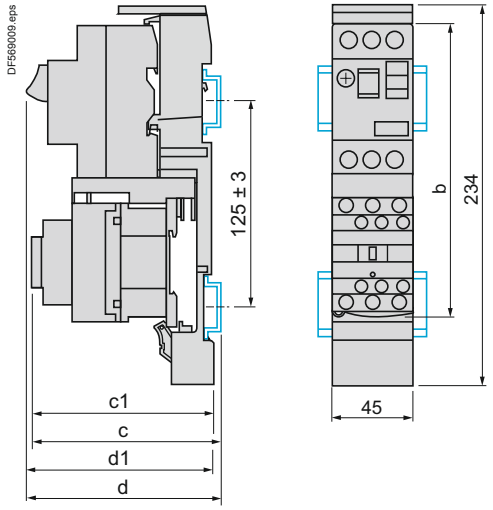

GV2 ME +	LC1 D09…D18	LC1 D25 and D32
b	176.4	186.8
c1	103.1	136.4
c	135.6	141.9
d1	107	107
d	112.5	112.5

Combination GV2 P + TeSys d contactor

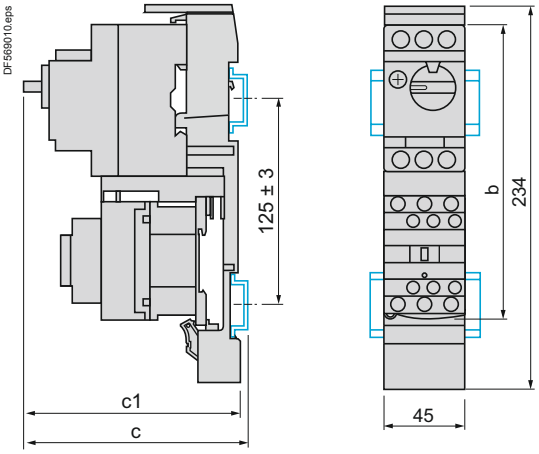

GV2 P +	LC1 D09…D18	LC1 D25 and D32
b	176.4	186.8
c1	136.5	142.4
c	141.6	147.9

GV2 ME + GV1 L3 (current limiter)

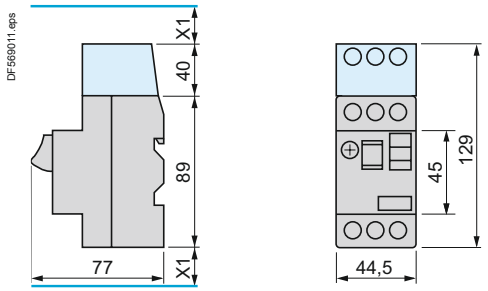

X1 = 10 mm for Ue = 230 V
or 30 mm for 230 V < Ue ≤ 690 V

7.5 mm height compensation plate GV1 F03

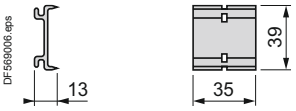

Mounting

Mounting of external operator GV2 APN01, GV2 APN02 or GV2 APN04 for motor circuit breakers GV2 P

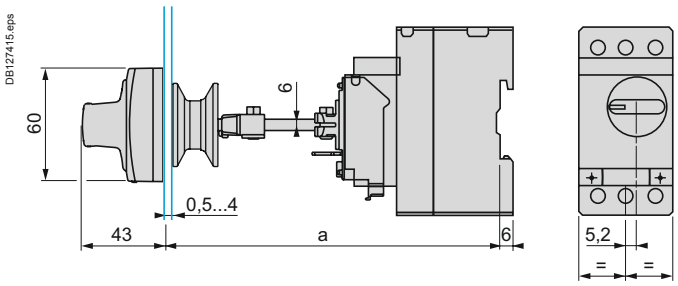

Door cut-out

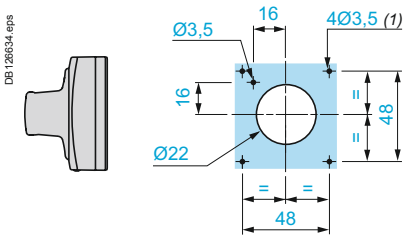

(1) For IP65 only.

Mounting of external operator GV APH02 for motor circuit breakers GV2 P

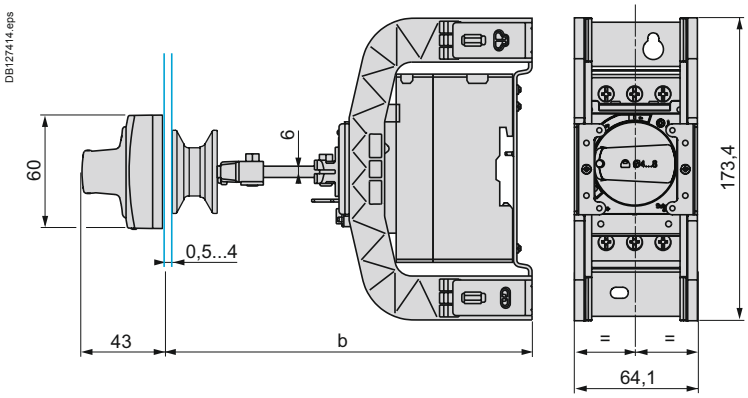

Door cut-out

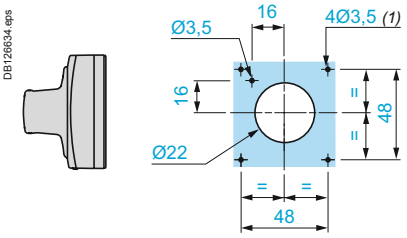

(1) For IP65 only.

	a		b	
	Mini	Maxi	Mini	Maxi
GV2 APN●●	140	250		
GV2 APN●● + GV APH02			151	250
GV2 APN●● + GV APK11	250	434	-	-
GV2 APN●● + GV APH02 + GV APK11	-	-	250	445

GV2 ME, GV2 P

Sets of busbars GV2 G445, GV2 G454, GV2 G472, with terminal block GV2 G05

DF569037.eps

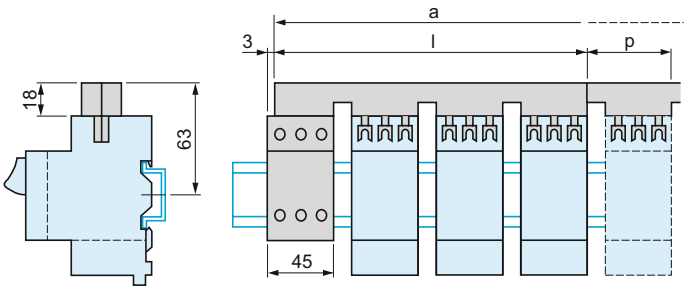

	l	p
GV2 G445 (4 x 45 mm)	179	45
GV2 G454 (4 x 54 mm)	206	54
GV2 G472 (4 x 72 mm)	260	72

	a			
Number of tap-offs	**5**	**6**	**7**	**8**
GV2 G445	224	269	314	359
GV2 G454	260	314	368	422
GV2 G472	332	404	476	548

Sets of busbars GV2 G●●● with terminal block GV1 G09

DF569028.eps

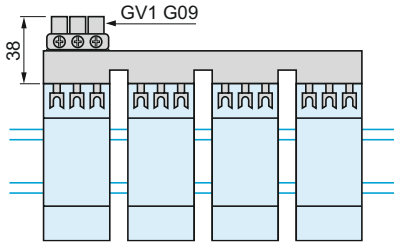

	l
GV2 G245 (2 x 45 mm)	89
GV2 G254 (2 x 54 mm)	98
GV2 G272 (2 x 72 mm)	116

Sets of busbars GV2 G245, GV2 G254, GV2 G272

DF569038.eps

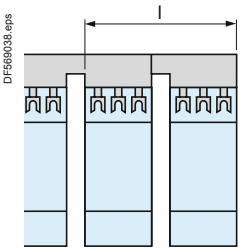

Sets of busbars GV2 G554

DF569039.eps

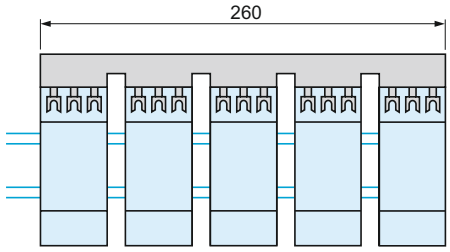

	l
GV2 G345 (3 x 45 mm)	134
GV2 G354 (3 x 54 mm)	152

Sets of busbars GV2 G345 and GV2 G354

DF569040.eps

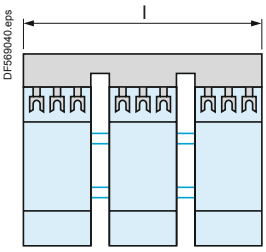

TeSys protection components
Thermal-magnetic motor circuit breakers
GV2 RT

GV2 RT
Dimensions

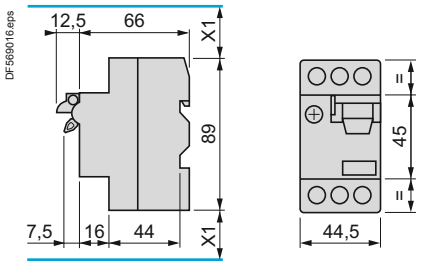

X1: Electrical clearance = 40 mm for Ue < 690 V

Mounting
Mounting of external operator GV2 AP03

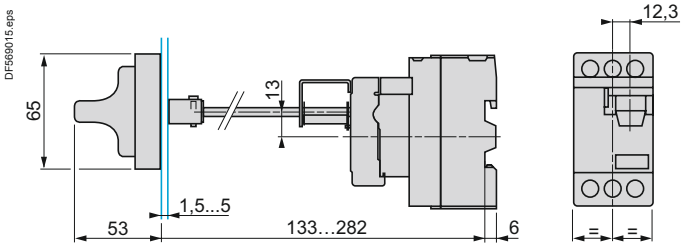

On 35 mm ⎓ rail

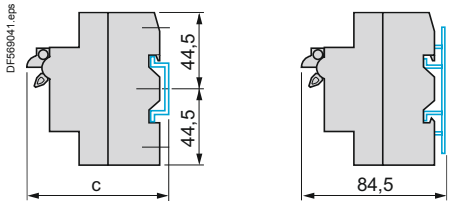

c = 80 on AM1 DP200 (35 x 7.5)
c = 88 on AM1 DE200, ED200 (35 x 15)

On panel with adapter plate GV2 AF02

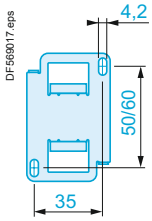

On pre-slotted plate AM1 PA

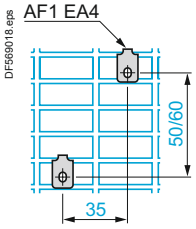

On rails DZ5 MB

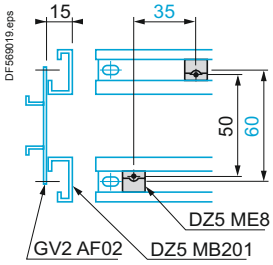

GV3 P

Dimensions

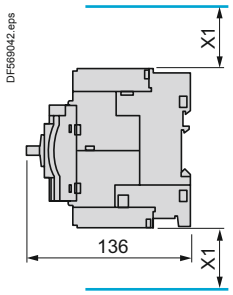

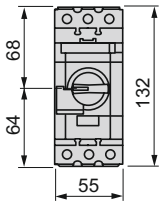

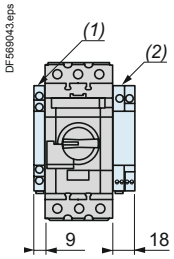

X1 = Electrical clearance (ISC max)
40 mm for Ue ⩽ 500 V, 50 mm for Ue ⩽ 690 V

***(1)** Blocks GV AN●● , GV AD●● and GV AM11.*
***(2)** Blocks GV3 AU●● and GV3 AS●●.*

***Note:** Leave a gap of 9 mm between 2 circuit breakers: either an empty space or side-mounting add-on contact blocks.*
Horizontal mounting is possible up to 40 °C.

Mounting

Mounting with TeSys contactor LC1 D40A…D65A

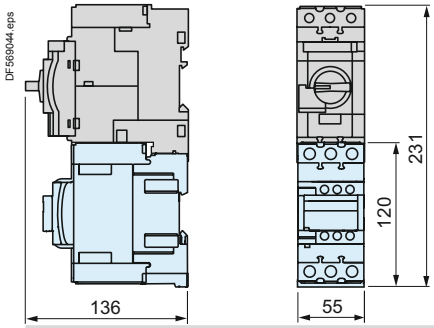

Side by side mounting with TeSys contactor LC1 D40A…D65A (S-shape busbar system GV3 S)

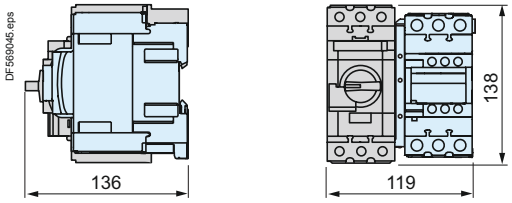

Mounting on rail AM1 DE200 or AM1 ED201

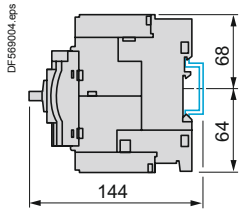

Panel mounting, using M4 screws

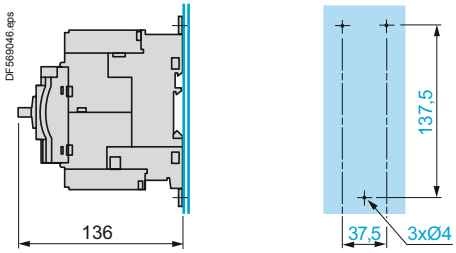

Mounting on pre-slotted plate AM1 PA

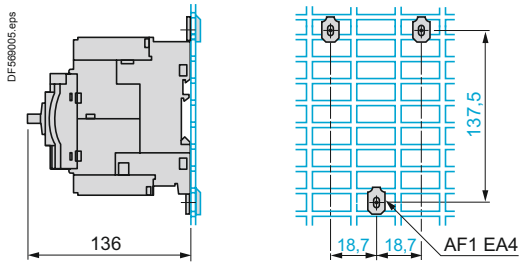

GV3 P

Busbar systems

Set of busbars GV3 G264

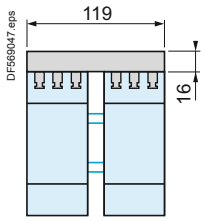

Set of busbars GV3 G364

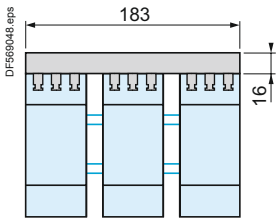

Note: Leave a space of 9 mm between 2 circuit breakers: either an empty space or side-mounting add-on contact blocks.
Horizontal mounting is possible up to 40 °C.

Mounting

Mounting of external operator GV3 APN01, GV3 APN02 or GV3 APN04 for motor circuit breakers GV3 P

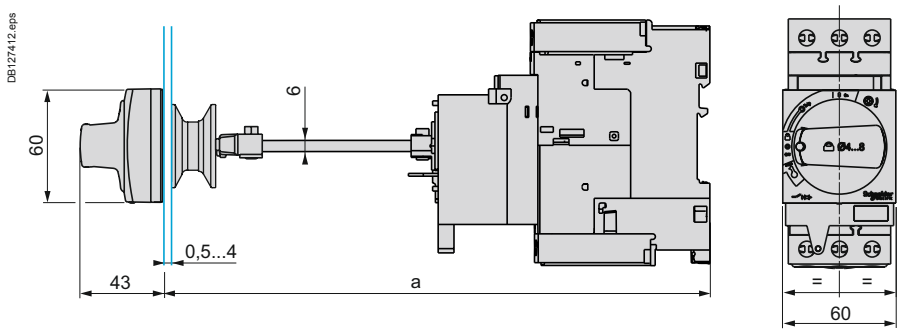

Door cut-out

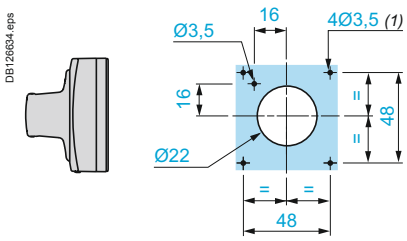

(1) For IP65 only.

Mounting of external operator GV APH03 for motor circuit breakers GV3 P

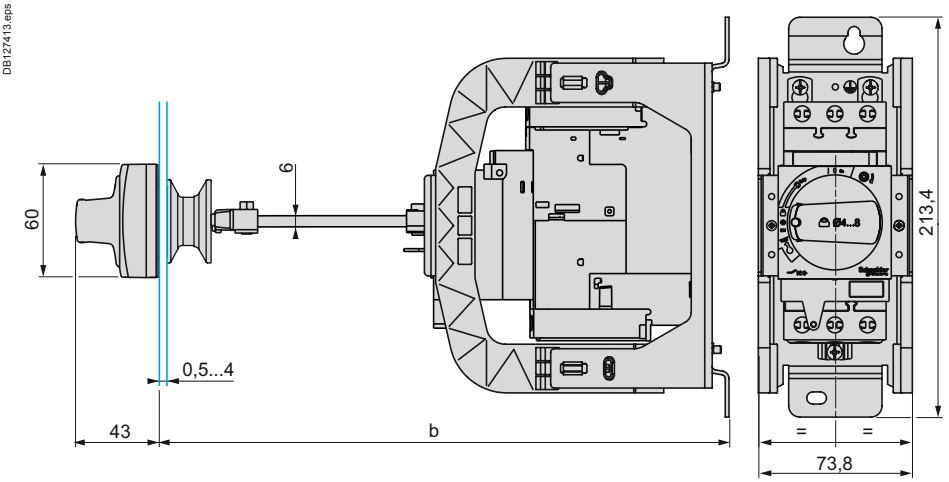

Door cut-out

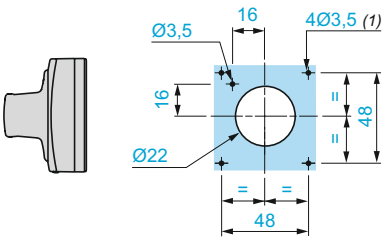

(1) For IP65 only.

	a		b	
	Mini	Maxi	Mini	Maxi
GV3 APN●●	189	300	-	-
GV3 APN●● + GV APK12	300	481		
GV3 APN●● + GV APH03	-	-	200	300
GV3 APN●● + GV APH03 + GV APK12	-	-	300	492

TeSys protection components
Thermal-magnetic motor circuit breakers
GV3 ME80

GV3 ME80

Dimensions

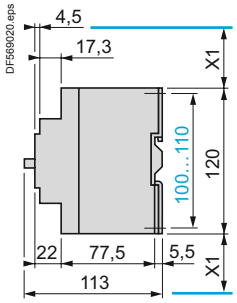

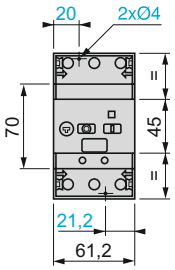

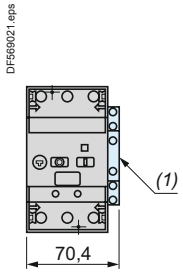

X1 = Electrical clearance (ISC max)
40 mm for Ue ≤ 500 V, 50 mm for Ue ≤ 690 V

(1) Blocks GV3 A01…A07.

Mounting

Mounting on rail AM1 DE200 or AM1 ED201

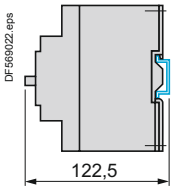

Panel mounting, using M4 screws

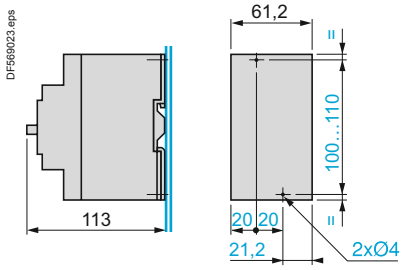

Mounting on pre-slotted plate AM1 PA

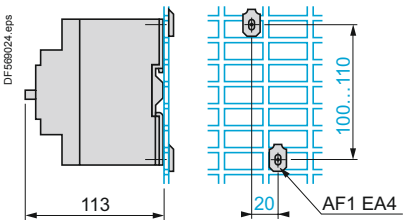

GV7 R

Dimensions

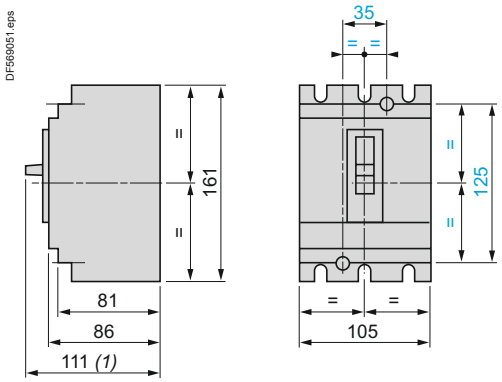

*(1) 126 for **GV7 R●220**.*

Motor circuit breakers with terminal shields or phase barriers GV7 R + GV7 AC01 or AC04

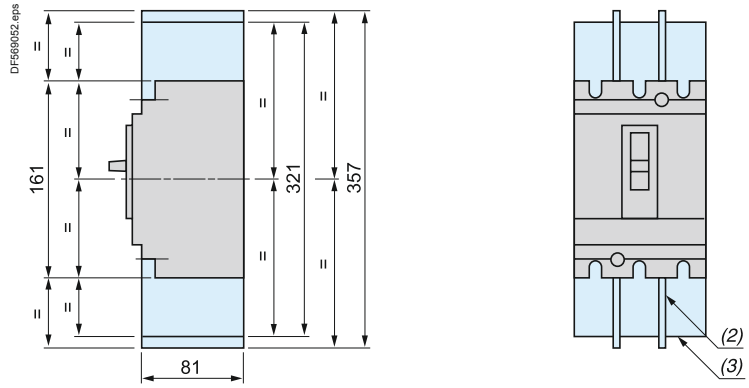

*(2) Phase barriers: **GV7 AC04**.*
*(3) Terminal shields: **GV7 AC01**.*

Combination of GV7 R and TeSys contactor LC1 F with kit GV7 AC0●

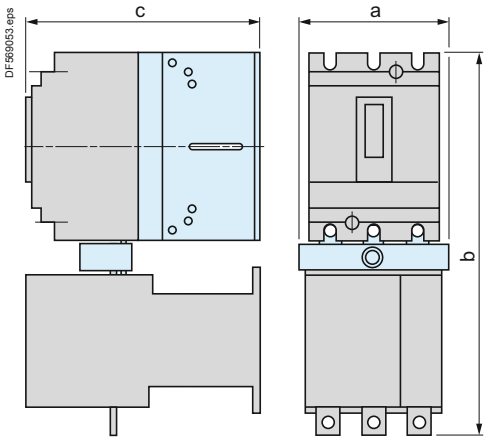

	a	b	c
GV7 R + LC1 F115 or F150 + GV7 AC06	119	334	181
GV7 R + LC1 F185 + GV7 AC06	119	338	188
GV7 R + LC1 F225 + GV7 AC07	131	358	188
GV7 R + LC1 F265 + GV7 AC07	131	364	215

Minimum distance between 2 circuit breakers mounted side by side = 0

Minimum electrical clearance

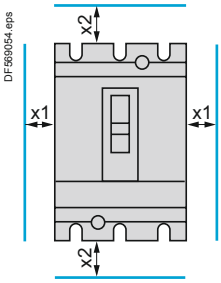

		x1	x2
Painted or insulated metal plate, insulation or insulated bar		0	30
Bare metal plate	U ≤ 440 V	5	35
	440 V < U < 600 V	10	35
	U ≥ 600 V	20	35

GV7 R

Panel mounting

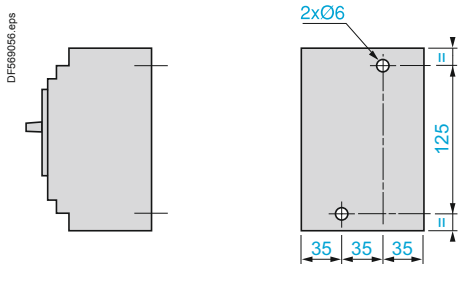

Mounting on 2 mounting rails DZ5 MB201

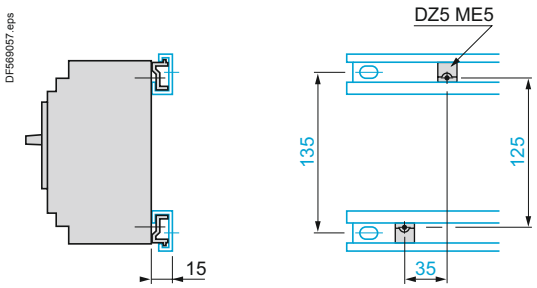

Flush-mounting

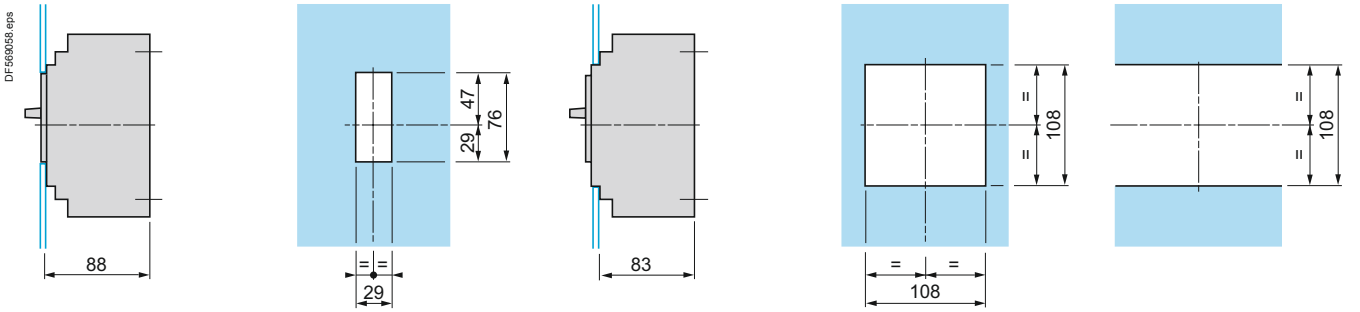

Combination of GV7 R and TeSys contactor LC1 F with kit GV7 AC0●

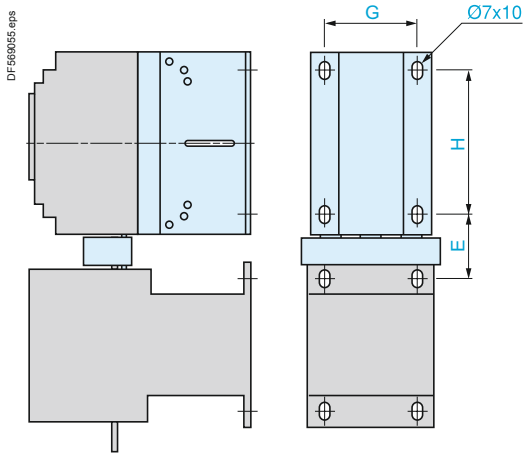

	E	G	H
GV7 R + LC1 F115 + GV7 AC06	44	85	120
GV7 R + LC1 F150 + GV7 AC06	46	85	120
GV7 R + LC1 F185 + GV7 AC06	48	85	120
GV7 R + LC1 F225 + GV7 AC07	57	85	120
GV7 R + LC1 F265 + GV7 AC07	60	85	120

GV7 R

Spreaders GV7 AC03

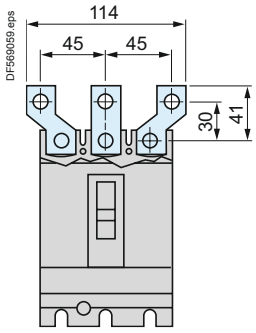

Connection

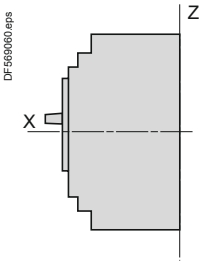

Smooth terminals

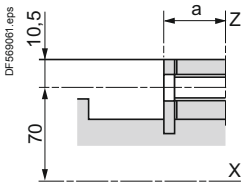

Connectors

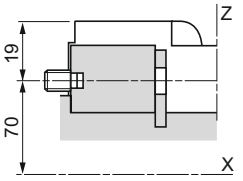

	a
GV7 R●40…R●150	19.5
GV7 R●220	21.5

Direct rotary handle GV7 AP03, GV7 AP04

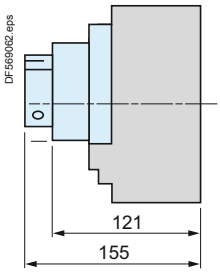

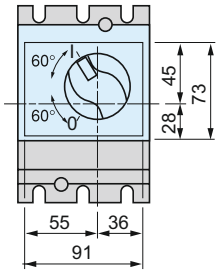

Flush-mounting

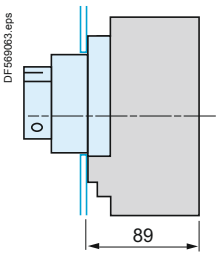

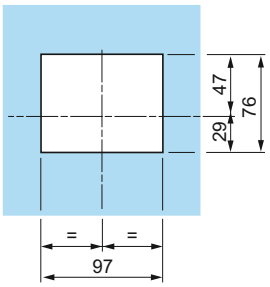

Direct rotary handle GV7 AP03 or GV7 AP04 with conversion accessory GV7 AP05

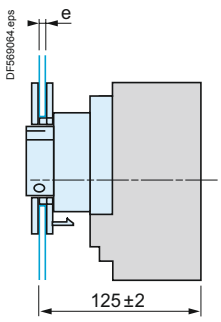

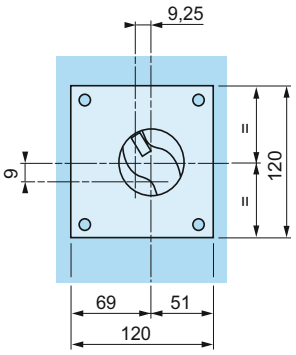

Front face cut-out

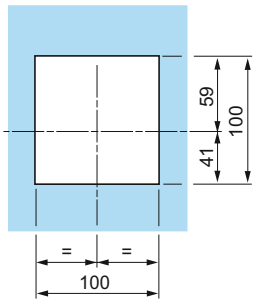

Enclosure viewed from top

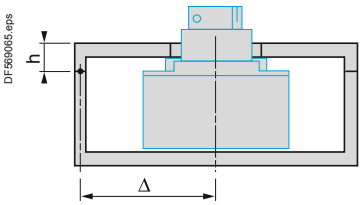

Door cut-outs require a minimum distance between the centre of the circuit breaker and the door hinge point Δ ≥ 100 + (h x 5)

e = 1 to 3 max

Extended rotary handle GV7 AP01, GV7 AP02

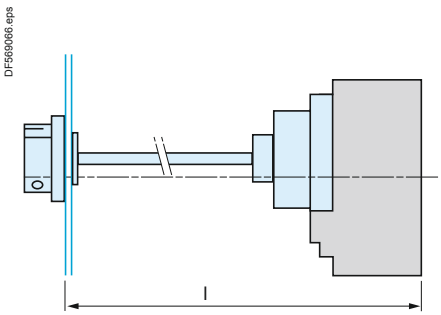

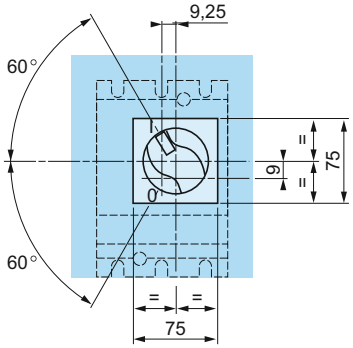

l : 185 min, 600 max
*The shaft of the extended rotary handle **GV7 AP01** or **GV7 AP02** must be cut to length: l – 126 mm.*

TeSys protection components
Thermal-magnetic motor circuit breakers GV2 ME, GV2 P, GV3 P and GV2 RT

Schemes

GV2 ME●● and GV2 RT

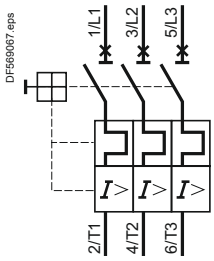

GV2 P●●

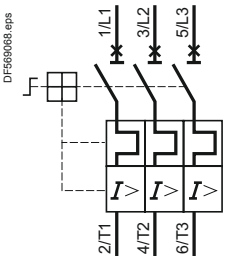

GV3 P●●

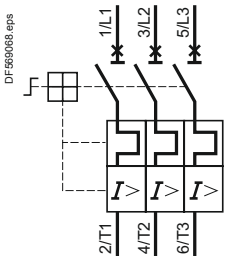

Front mounting add-on contact blocks
Instantaneous auxiliary contacts

GV AE1

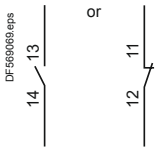

GV AE11

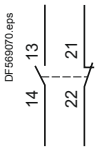

GV AE20

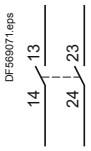

Front mounting add-on contact blocks
Instantaneous auxiliary contacts and fault signalling contacts

GV AED101

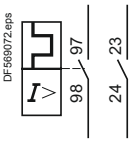

GV AED011

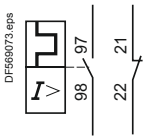

Side mounting add-on contact blocks
Instantaneous auxiliary contacts and fault signalling contacts

GV AD0110

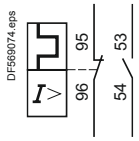

GV AD0101

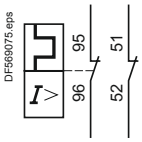

GV AD1010

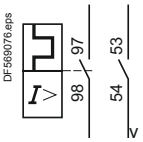

GV AD1001

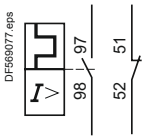

Instantaneous auxiliary contacts

GV AN11

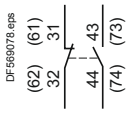

GV AN20

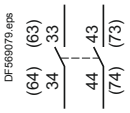

Short-circuit signalling contacts

GV AM11

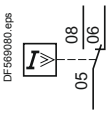

Voltage trips

GV AU●●●

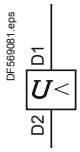

GV AS●●●

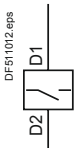

GV AX●●●

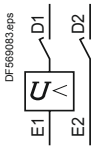

Current limiter

GV1 L3

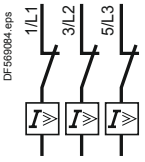

Use of fault signalling contact and short-circuit signalling contact

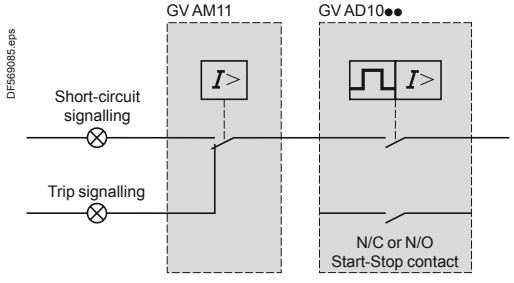

Connection of undervoltage trip for dangerous machines (conforming to INRS) on GV2 ME only

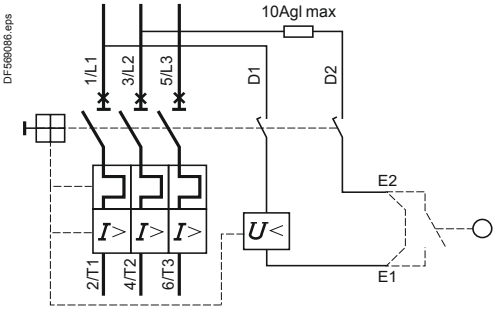

TeSys protection components
Thermal-magnetic motor circuit breakers GV3 ME80 and GV7 R

Schemes

Motor circuit breakers
GV3 ME80

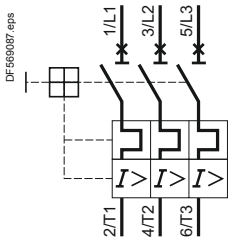

Auxiliary contact block modules

GV3 A01



GV3 A02



GV3 A03

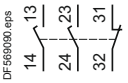

GV3 A05

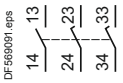

GV3 A06

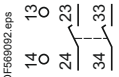

GV3 A07

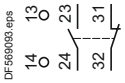

Fault signalling contacts

GV3 A08

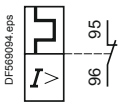

GV3 A09

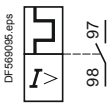

Voltage trips

GV3 B



GV3 D



Motor circuit breakers
GV7 R

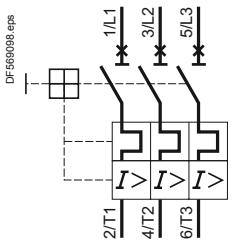

Add-on auxiliary contacts according to their location (1)
GV7 AE11, GV7 AB11

Location 1
C/O contact



Location 2
Trip indication



Location 3
Electrical fault indication



Location 4
C/O contact



A self-adhesive label, supplied with the contact, can be affixed to the front face of the circuit-breaker to allow personalised marking according to the function of the contact or contacts.

(1) See pages B6/91 and B6/17.

Electric trips

GV7 AU●●●

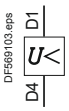

GV7 AS●●●

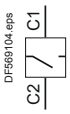

GV7 AD111, AD112

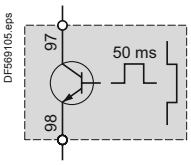

Recommended application schemes GV7 AD111, AD112

Fault indication

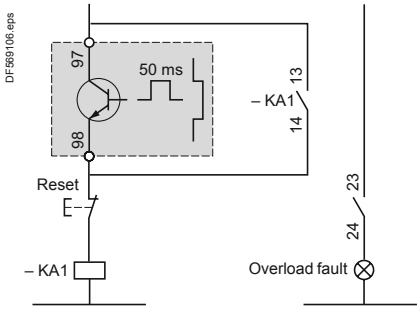

Associated components
KA1: CA2 KN or CAD N

Contactor opening on overload

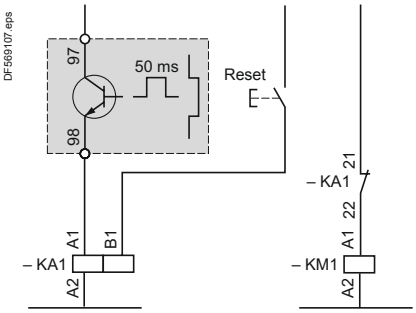

Associated components
KA1: CAD + LAD 6K10 or RHK
KM1: LC1 D or LC1 F

Protection components

Thermal-magnetic circuit breakers TeSys GB2 for the protection of industrial equipment control circuits

Presentation

GB2 thermal-magnetic circuit breakers protect and isolate the control circuits of industrial equipment with contactor coils, transformers….
They protect and isolate single-phase auxiliary circuits such as solenoid valves, electro-brakes, battery chargers, supplied from the control circuit voltage.

GB2 CB, GB2 CD, GB2 DB

12 ratings are available, from 0.5 to 20 A, in single-pole (GB2 CB), single-pole + neutral (GB2 CD) and 2-pole (GB2 DB) versions.
They have a magnetic tripping threshold set at between 12 and 16 In to withstand the current peaks generated by many industrial components.

GB2 CS

2 ratings are available, 0.5 and 1 A, in single-pole version.
The magnetic tripping threshold is set between 5 and 7 In.

Functions, installation

Clip-on fixing onto all types of 35 mm ⊥⊥ rails, on ⊏⊐ rails and on Telequick mounting plates.
Upstream and downstream marking by means of AB1 clip-in markers.
Clear indication of “I” and “O” positions on the operator.
Tamper-proof device which requires no special maintenance (fixed magnetic and thermal tripping thresholds).

Selection for the protection of circuits supplied by transformers

Single-phase transformers.
Magnetising peak: 20 In.
Operation of magnetic trips: 13 In.

Power	Primary (1)		Secondary			
VA	220/240 V	380/415 V	24 V	48 V	110 V	220 V
40	GB2 DB05	GB2 DB05	GB2 CD07	GB2 CD06	GB2 CD05	GB2 CD05
63	GB2 DB05	GB2 DB05	GB2 CD08	GB2 CD07	GB2 CD06	GB2 CD05
100	GB2 DB06	GB2 DB05	GB2 CD10	GB2 CD07	GB2 CD06	GB2 CD05
160	GB2 DB07	GB2 DB06	GB2 CD14	GB2 CD09	GB2 CD07	GB2 CD06
250	GB2 DB07	GB2 DB06	GB2 CD16	GB2 CD12	GB2 CD08	GB2 CD07
400	GB2 DB08	GB2 DB07	GB2 CD22	GB2 CD14	GB2 CD09	GB2 CD07
630	GB2 DB10	GB2 DB08	–	GB2 CD21	GB2 CD12	GB2 CD08
1000	GB2 DB14	GB2 DB09	–	–	GB2 CD16	GB2 CD10
1600	GB2 DB20	GB2 DB14	–	–	–	GB2 CD14
2000	GB2 DB21	GB2 DB14	–	–	GB2 CD22	GB2 CD16
2500	GB2 DB22	GB2 DB20	–	–	–	GB2 CD20
3000	GB2 DB22	GB2 DB20	–	–	–	GB2 CD21
4000	–	GB2 DB21	–	–	–	GB2 CD22
5000	–	GB2 DB22	–	–	–	–

*(1) If the breaking capacity of the **GB2** is insufficient, use a **GV2 RT** with 2 poles connected in series, see page B6/8.*

Characteristics: pages B6/85 to B6/87
References: pages B6/26 and B6/27
Dimensions: page B6/88
Schemes: page B6/88

Protection components

Thermal-magnetic circuit breakers TeSys GB2 for the protection of industrial equipment control circuits

Environment

Circuit breaker type			GB2 CB	GB2 CD	GB2 DB	GB2 CS
Conforming to standards			IEC 60947-1, 947-2, EN 60947-1, 60947-2			
Product certifications			CSA, NEMKO, UL	NEMKO, UL	–	–
Protective treatment			"TC"			
Degree of protection	Conforming to IEC 60529		IP 20			
Shock resistance	Conforming to IEC 60068-2-27		22 gn for 20 ms			
Vibration resistance	Conforming to IEC 60068-2-6		5 gn (5…110 Hz)			
Ambient air temperature around the device	Storage	°C	-40…+80			
	Operation	°C	-20…+60			
Flame resistance	Conforming to IEC 60695-2-1	°C	960			
Maximum operating altitude		m	3000			
Operating position	In relation to normal vertical mounting plane		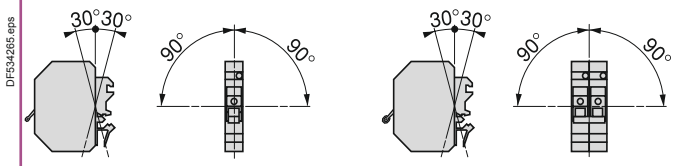			
			GB2 CB,CD, CS		GB2 DB	

Cabling			Minimum c.s.a.	Maximum c.s.a.
	Solid cable	mm²	1 x 0.75	1 x 6 or 2 x 4
	Flexible cable with cable end	mm²	1 x 0.75	1 x 4 or 2 x 2.5
Tightening torque		N.m	1.2	

Technical characteristics

Utilisation category	Conforming to IEC 60947-2		A		A		A		A	
Rated operational voltage (Ue)	Conforming to IEC 60947-2	V	250 (1)		250		415		250 (1)	
	Conforming to CSA C22-2 Nr 14 and UL 1077	V	277		–		277		–	
Rated operational frequency	Conforming to IEC 60947-2	Hz	50/60		50/60		50/60		50/60	
Rated impulse withstand voltage (U imp)	Conforming to IEC 60947-2	kV	4		4		4		4	
Total power dissipated per pole		W	2		2		2		1.9	
Mechanical and electrical durability	C.O.: Closing - Opening	C.O.	8000		8000		8000		8000	

Operational current correction coefficient (**a** or ---)	According to the permissible ambient temperature	°C	-20	-10	0	+10	+20	+30	+40	+50	+60
	Correction coefficient		1.2	1.15	1.1	1.05	1	0.95	0.90	0.85	0.80

Tripping threshold	Of the magnetic trips		12…16 In	12…16 In	12…16 In	5…7 In

*(1) Ue = 415 V when a **GB2** circuit breaker is fitted on every live conductor.*

Tripping curves

Average operating time at 20 °C without prior current flow (cold state)

GB2 CB, GB2 CD, GB2 DB

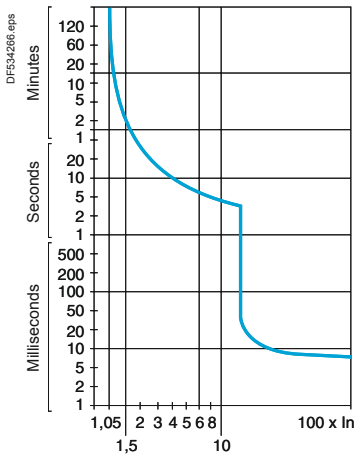

GB2 CS

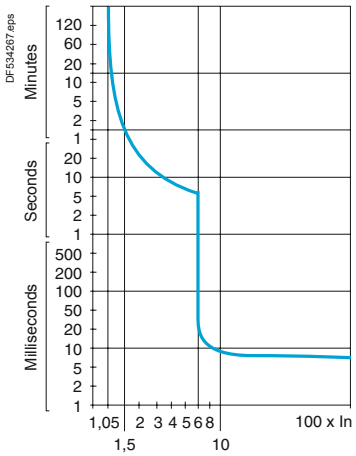

Circuit breakers

Protection components

Thermal-magnetic circuit breakers TeSys GB2 for the protection of industrial equipment control circuits

Circuit breaker type				GB2											
				CB05	CB06	CB07	CB08	CB09	CB10	CB12	CB14	CB16	CB20	CB21	CB22
Rating			A	0.5	1	2	3	4	5	6	8	10	12	16	20
Breaking capacity conforming to IEC 60947-2 ∿ 50/60 Hz	110 V	Icu	kA	50	50	15	10	6	3	3	3	2	2	2	2
		Ics % (1)		100	50	50	50	50	75	75	75	75	75	75	75
	230/240 V	Icu	kA	50	50	15	3	3	2	1.5	1.5	1.5	1.5	1.5	1.5
		Ics % (1)		25	25	25	50	50	75	75	75	75	75	75	75
Associated fuses, if required if Isc > breaking capacity Icu conforming to IEC 60947-2	110 V	aM	A	★	★	20	25	25	40	40	50	50	63	63	63
		gG	A	★	★	25	32	32	50	50	63	63	80	80	80
	230/240 V	aM	A	★	★	16	20	20	32	32	40	40	50	50	50
		gG	A	★	★	25	32	32	40	40	50	50	63	63	63

Circuit breaker type				GB2											
				CD05	CD06	CD07	CD08	CD09	CD10	CD12	CD14	CD16	CD20	CD21	CD22
Rating			A	0.5	1	2	3	4	5	6	8	10	12	16	20
Breaking capacity conforming to IEC 60947-2 ∿ 50/60 Hz	110 V	Icu	kA	50	50	15	10	6	3	3	3	2	2	2	2
		Ics % (1)		100	50	50	50	50	75	75	75	75	75	75	75
	230/240 V	Icu	kA	50	50	15	3	3	2	1.5	1.5	1.5	1.5	1.5	1.5
		Ics % (1)		25	25	25	50	50	75	75	75	75	75	75	75
Associated fuses, if required if Isc > breaking capacity Icu conforming to IEC 60947-2	110 V	aM	A	★	★	20	25	25	40	40	50	50	63	63	63
		gG	A	★	★	25	32	32	50	50	63	63	80	80	80
	230/240 V	aM	A	★	★	16	20	20	32	32	40	40	50	50	50
		gG	A	★	★	25	32	32	40	40	50	50	63	63	63

Circuit breaker type				GB2											
				DB05	DB06	DB07	DB08	DB09	DB10	DB12	DB14	DB16	DB20	DB21	DB22
Rating			A	0.5	1	2	3	4	5	6	8	10	12	16	20
Breaking capacity conforming to IEC 60947-2 ∿ 50/60 Hz	110 V	Icu	kA	50	50	15	10	6	3	3	3	2	2	2	2
		Ics % (1)		100	50	50	50	50	75	75	75	75	75	75	75
	230/240 V	Icu	kA	50	50	15	3	3	2	1.5	1.5	1.5	1.5	1.5	1.5
		Ics % (1)		25	25	25	50	50	75	75	75	75	75	75	75
	400/415 V	Icu	kA	50	50	15	3	3	2	1.5	1.5	1.5	1.5	1.5	75
		Ics % (1)		25	25	25	50	50	75	75	75	75	75	1.5	75
Associated fuses, if required if Isc > breaking capacity Icu conforming to IEC 60947-2	110 V	aM	A	★	★	20	25	25	40	40	50	50	63	63	63
		gG	A	★	★	25	32	32	50	50	63	63	80	80	80
	230/240 V	aM	A	★	★	16	20	20	32	32	40	40	50	50	50
		gG	A	★	★	25	32	32	40	40	50	50	63	63	63
	400/415 V	aM	A	★	★	16	20	20	32	32	40	40	50	50	50
		gG	A	★	★	25	32	32	40	40	50	50	63	63	63

(1) As % of Icu.
★ Fuse not required. Breaking capacity Icu > Isc.

Protection components

Thermal-magnetic circuit breakers TeSys GB2 for the protection of industrial equipment control circuits

Circuit breaker type					GB2											
					●●05	●●06	●●07	●●08	●●09	●●10	●●12	●●14	●●16	●●20	●●21	●●22
Breaking capacity (Icu) conforming to IEC 60947-2 ⎓		24 V	kA		1.5	1.5	1.5	1.5	1.5	1.5	1.5	1.5	1.5	1.5	1.5	1.5
		48 V	kA		1	1	1	1	1	1	1	1	–	–	–	–
Operational current conforming to IEC 60947-5-1 ⎓	DC-12	24 V	A		0.5	1	2	3	4	5	6	8	10	12	16	20
		48 V	A		0.5	1	2	3	4	5	6	8	10	12	16	20
	DC-13	24 V	A		0.5	1	2	3	4	5	6	8	10	12	16	20
		48 V	A		0.5	1	2	3	4	5	6	8	–	–	–	–

Circuit breaker type					GB2					
					CS05			CS06		
Rating			A		0.5			1		
Breaking capacity conforming to IEC 60947-2 ∿ 50/60 Hz	110 V	Icu	kA		50			50		
		Ics % (1)			100			100		
	230/240 V	Icu	kA		50			50		
		Ics % (1)			25			25		
	400/415 V (2)	Icu	kA		50			50		
		Ics % (1)			25			25		
Breaking capacity (Icu) conforming to IEC 60947-2 ⎓		24 V	kA		1.5			1.5		
		48 V	kA		1			1		
Operational current conforming to IEC 60947-5-1 ⎓	DC-12	24 V	A		0.5			1		
		48 V	A		0.5			1		
	DC-13	24 V	A		0.5			1		
		48 V	A		0.5			1		
Maximum permissible line length for star-delta starting (length of cable containing 2 or more conductors)	With contactors LC● D09 …D18	Operational voltage	V		48	110	230	48	110	230
		C.s.a. 0.60 mm²	m		(3)	31	365	6	85	230
		0.75 mm²	m		(3)	39	460	8	110	290
		1 mm²	m		(3)	52	610	10	145	380
		1.5 mm²	m		(3)	78	910	15	220	570
		2.5 mm²	m		(3)	130	1520	26	360	950
		4 mm²	m		(3)	200	2400	41	580	1500
	With contactors LC● D25…D32	Operational voltage	V		48	110	230	48	110	230
		C.s.a. 0.60 mm²	m		(3)	(3)	230	(3)	56	230
		0.75 mm²	m		(3)	(3)	290	(3)	70	290
		1 mm²	m		(3)	(3)	390	(3)	95	380
		1.5 mm²	m		(3)	(3)	580	(3)	140	570
		2.5 mm²	m		(3)	(3)	970	(3)	230	950
		4 mm²	m		(3)	(3)	1500	(3)	375	1500
	With contactors LC● D40…D80	Operational voltage	V		48	110	230	48	110	230
		C.s.a. 0.60 mm²	m		(3)	(3)	46	(3)	13	100
		0.75 mm²	m		(3)	(3)	60	(3)	17	130
		1 mm²	m		(3)	(3)	80	(3)	22	170
		1.5 mm²	m		(3)	(3)	120	(3)	34	250
		2.5 mm²	m		(3)	(3)	190	(3)	56	420
		4 mm²	m		(3)	(3)	310	(3)	90	680

(1) As % of Icu.
*(2) One **GB2 CS** circuit breaker on each live conductor.*
(3) Use relays.

Protection components

Thermal-magnetic circuit breakers TeSys GB2 for the protection of industrial equipment control circuits

Dimensions

GB2 CB●●, GB2 CD●●, GB2 CS●●

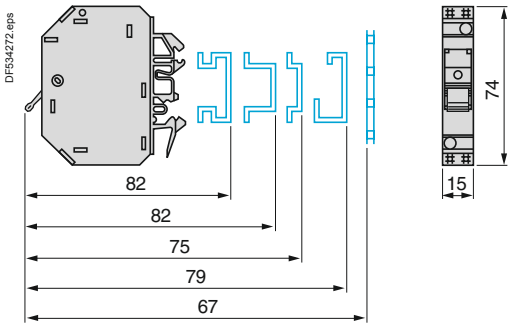

GB2 DB●●

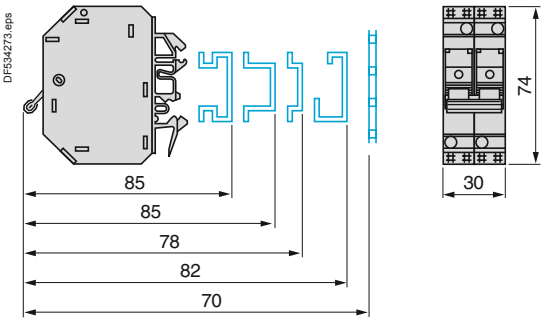

Marking: up to twelve AB1 R clip-in markers.

Schemes

GB2 CB●●

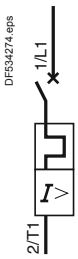

GB2 CD●●

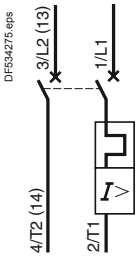

GB2 DB●●

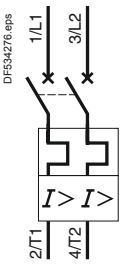

GB2 CS●●

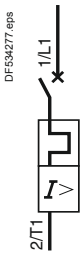

Presentation, selection:
page B6/84

References:
pages B6/26 and B6/27

Characteristics:
pages B6/85 to B6/87

TeSys protection components
Thermal-magnetic motor circuit breakers GV2, GV3 P and GV3 L
Auxiliary contacts

Type of contacts			Instantaneous auxiliary GV AN, GV AD							Fault signalling GV AD, GV AM11 (1)				Instantaneous auxiliary GV AE			
Rated insulation voltage (Ui) (associated insulation coordination)	Conforming to IEC 60947-1	V	690							690				250 (690 in relation to main circuit)			
	Conforming to CSA C22-2 n° 14 and UL 508	V	600							300				300			
Conventional thermal current (Ith)	Conforming to IEC 60947-5-1	A	6							2.5				2.5			
	Conforming to CSA C22-2 n° 14 and UL 508	A	5							1				1			
Mechanical durability (C.O.: Close - Open)		C.O.	100 000							1000				100 000			
Operational power and current conforming to IEC 60947-5-1. a.c. operation			AC-15/100 000 C.O.							AC-14/1000 C.O.				AC-15/100 000 C.O.			
	Rated operational voltage (Ue)	V	**48**	**110 127**	**230 240**	**380 415**	**440**	**500**	**690**	**24**	**48**	**110 127**	**230 240**	**24**	**48**	**110 127**	**230 240**
	Operational power, normal conditions	VA	300	500	720	850	650	500	400	36	48	72	72	48	60	120	120
	Occasional breaking and making capacities, abnormal conditions	kVA	3	7	13	15	13	12	9	0.22	0.3	0.45	0.45	0.48	0.6	1.27	2.4
	Rated operational current (Ie)	A	6	4.5	3.3	2.2	1.5	1	0.6	1.5	1	0.5	0.3	2	1.25	1	0.5
Operational power and current conforming to IEC 60947-5-1. d.c. operation			DC-13/100 000 C.O.							DC-13/1000 C.O.				DC-13/100 000 C.O.			
	Rated operational voltage (Ue)	V	**24**	**48**	**60**	**110**	**240** (2)	**–**	**–**	**24**	**48**	**60**	**–**	**24**	**48**	**60**	**–**
	Operational power, normal conditions	W	140	240	180	140	120	–	–	24	15	9	–	24	15	9	–
	Occasional breaking and making capacities, abnormal conditions	W	240	360	240	210	180	–	–	100	50	50	–	100	50	50	–
	Rated operational current (Ie)	A	6	5	3	1.3	0.5	–	–	1	0.3	0.15	–	1	0.3	0.15	–
Low power switching reliability of contact			**GV AE**: Number of failures for “n” million operating cycles (17 V-5 mA): = 10^{-6}														
Minimum operational conditions d.c. operation		V	17														
		mA	5														
Short-circuit protection			By **GB2 CB●●** circuit breaker (rating according to operational current for Ue ≤ 415 V) or by gG fuse 10 A max											**GB2 CB06** or gG fuse 10 A max			
Cabling, screw clamp terminals	Number of conductors		**1**							**2**							
	Solid cable	mm²	1…2.5							1…2.5							
	Flexible cable without cable end	mm²	0.75…2.5							0.75…2.5							
	Flexible cable with cable end	mm²	0.75…1.5							0.75…1.5							
	Tightening torque	N.m	1.4 max							1.4 max							
Cabling, spring terminal connections			**GV AN** only														
	Flexible cable without cable end	mm²	0.75…2.5							0.75…2.5				–			0.75…1.5

Operation of instantaneous auxiliary contacts

GV2

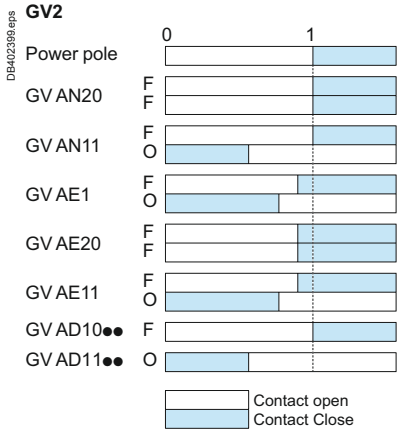

GV3P, GV3L

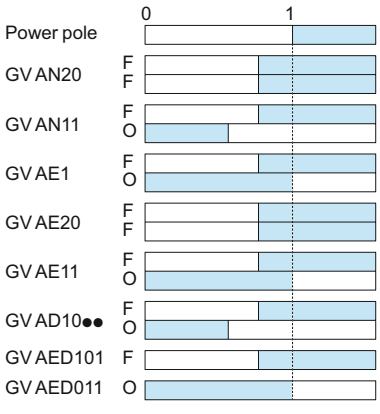

Operation of fault signalling contacts

GV AM11
Change of state following tripping on short-circuit.

GV AD10●● and **GV AD01●●**
Change of state following tripping on short-circuit, overload or undervoltage.

(1) For application example of fault signalling contact and short-circuit signalling contact, see page B6/82.
(2) Add an RC circuit type LA4 D to the load terminals, see page B8/17.

References:
page B6/11

Dimensions, schemes:
pages B6/38 to B6/48 and B6/70 to B6/83

TeSys protection components

Thermal-magnetic motor circuit breakers GV3 ME80

Auxiliary contacts

Type of contacts			Instantaneous auxiliary contacts GV3 A01…A07							Fault signalling contacts GV3 A08 and A09						
Rated insulation voltage (Ui)	Conforming to IEC 60947-1	**V**	690							690						
	Conforming to CSA C22-2 n° 14, UL 508	**V**	600 (B600)							600 (B600)						
Conventional rated thermal current (Ith)	Conforming to IEC 60947-5-1	**A**	6							6						
	Conforming to CSA C22-2 n° 14, UL 508	**A**	5 (B600)							5 (B600)						
Mechanical durability (C.O.: Close - Open)		**C.O.**	100 000							1000						
Operational power and current conforming to IEC 60947-5-1 a.c. operation	**Rated operational voltage (Ue)**	**V**	**48**	**110 127**	**220 240**	**380 415**	**440**	**500**	**690**	**48**	**110 127**	**220 240**	**380 415**	**440**	**500**	**690**
	Operational power		AC-11/100 000 C.O.							AC-11/1000 C.O.						
		VA	350	500	800	850	700	700	400	240	460	800	850	450	450	200
	Occasional breaking and making capacities	**kVA**	4	12	20	20	15	15	10	2.4	8	12	15	12	12	8
	Operational current (Ie)	**A**	6	4.5	3.5	2.2	1.5	1.5	0.6	5	3.6	3.5	2.2	1	1	0.3
Operational power and current conforming to IEC 60947-5-1 d.c. operation	**Rated operational voltage (Ue)**	**V**	**24**	**48**	**60**	**110**	**220**			**24**	**48**	**60**	**110**	**220**		
	Operational power		DC-11/100 000 C.O.							DC-11/1000 C.O.						
		W	180	240	180	140	120			120	120	90	70	60		
	Occasional breaking and making capacities	**W**	240	360	240	210	180			180	180	135	105	90		
	Operational current (Ie)	**A**	6	5	3	1.3	0.5			5	2.5	1.5	0.7	0.3		
Short-circuit protection			By **GB2 CB08** circuit breaker or gG fuse, 6A max													
Connection	Number of conductors		**1**			**2**										
	Solid cable	**mm²**	1…2.5			1…2.5										
	Flexible cable without cable end	**mm²**	0.75…2.5			0.75…2.5										
	Flexible cable with cable end	**mm²**	0.75…2.5			0.75…1.5										

Contact operation GV3

DB402400.eps

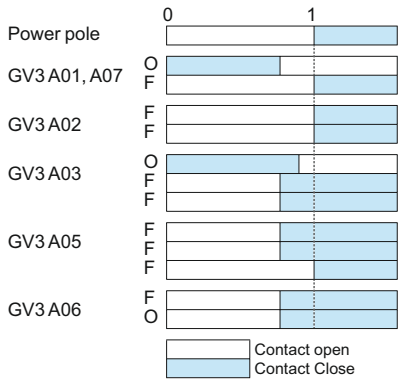

GV3 A08 and **A09** change state following tripping on short-circuit or overload

References:
page B6/11

Schemes:
page B6/48

TeSys protection components
Thermal-magnetic motor circuit breakers GV7
Auxiliary contacts

Auxiliary contact characteristics

Type of contacts				GV7 AE11							GV7 AB11						
Rated insulation voltage(Ui) (associated insulation coordination)	Conforming to IEC 60947-1		V	690							690						
Conventional thermal current (Ith)	Conforming to IEC 60947-5-1		A	6							6						
Mechanical durability (C.O.: Close - Open)			C.O.	50 000							50 000						
Operational current conforming to IEC 60947-5-1 a.c. operation				AC-12 or AC-15. 50 000 C.O.							AC-12 or AC-15. 50 000 C.O.						
	Rated operational voltage (Ue)		V	**24**	**48**	**110**	**230/ 240**	**380/ 415**	**440**	**690**	**24**	**48**	**110**	**230/ 240**	**380/ 415**	**440**	**690**
	Rated operational current (Ie)	AC-12	A	6	6	6	6	6	6	6	5	5	5	5	5	5	5
		AC-15	A	6	6	5	4	3	3	0.1	5	5	4	3	2.5	2.5	0.1
Operational current conforming to IEC 60947-5-1 d.c. operation				DC-12 or DC-14. 50 000 C.O.							DC-12 or DC-14. 50 000 C.O.						
	Rated operational voltage (Ue)		V	**24**		**48**		**110**		**250**	**24**		**48**		**110**		**250**
	Rated operational current (Ie)	DC-12	A	2.5		2.5		0.8		0.3	2		2		0.5		–
		DC-14	A	1		0.2		0.5		0.03	0.5		0.1		0.25		–
Minimum operational conditions d.c. operation			V	17							12						
			mA	5							5						
Short-circuit protection				By **GB2 CB●●** circuit breaker (rating according to operational current for Ue ≤ 415 V) or gG fuse, 10 A max.													
Cabling	Solid cable		mm²	1 x 1.5 conductor							1 x 1.5 conductor						
	Flexible cable without cable end		mm²	1 x 1.5 conductor							1 x 1.5 conductor						
	Flexible cable with cable end		mm²	1 x 1.5 conductor							1 x 1.5 conductor						

Circuit breakers

References: page B6/23

Schemes: page B6/83

TeSys protection components
Thermal-magnetic motor circuit breakers
Electric trips

Characteristics of electric trips

Circuit breaker type			GV2 ME, GV2 P GV3 P, GV3 L		GV2 ME only	GV3 ME80		GV7 R	
Type of trip			**GV AU**	**GV AS**	**GV AX** (1)	**GV3 B**	**GV3 D**	**GV7 AU**	**GV7 AS**
Rated insulation voltage (Ui)	Conforming to IEC 60947-1	**V**	690	690	500	690	690	690	690
	Conforming to CSA C22-2 n° 14, UL 508	**V**	600	600	–	600 (B600)	600 (B600)	600	600
Operational voltage	Conforming to IEC 60947-1	**V**	0.85… 1.1 Un	0.7… 1.1 Un	0.85… 1.1 Un	0.8…1.1 Un		0.85… 1.1 Un	0.7… 1.1 Un
Drop-out voltage		**V**	0.7… 0.35 Un	0.75… 0.2 Un	0.7… 0.35 Un	0.7…0.35 Un		0.35… 0.7 Ue	0.2… 0.75 Ue
Inrush consumption	~	**VA**	12	14	12	12		< 10	
Sealed consumption	~	**VA**	3.5	5	3.5	7		< 5	
Operating time	Conforming to IEC 60947-1		From the moment the voltage reaches its operational value until opening of the circuit-breaker.						
		ms	10…15			10	15	< 50	
On-load factor			100 %			100 %		100 %	
Cabling	Number of conductors		2 or 4			1 or 2		1	
	Solid cable	**mm²**	1…2.5			1…2.5		1.5	
	Flexible cable without cable end	**mm²**	0.75…2.5			0.75…2.5		1.5	
	Flexible cable with cable end	**mm²**	0.75…1.5			0.75…2.5		1	
Tightening torque		**N.m**	1.4 max			1.2		1.2	
Mechanical durability (C.O.: Close - Open)		**C.O.**	30 000 (GV2 ME and GV2 P) 10 000 (GV3 P and GV3 L)			50 % of the mechanical durability of the circuit-breaker			

*(1) Wiring scheme of undervoltage trip for dangerous machines (conforming to INRS) on **GV2 ME** only, see page B6/82.*

References: page B6/23

Schemes: pages B6/82 to B6/83

TeSys protection components

Thermal-magnetic and magnetic motor circuit breakers GV2 and GV3

Accessories

Characteristics of 3-pole busbars GV2 G●●● and GV3 G●64

			GV2 G●●●	GV3 G●64
Rated insulation voltage (Ui)	Conforming to IEC 60947-1	**V**	690	690
Conventional thermal current (Ith)	Conforming to IEC 60439-1	**A**	63	115
Permissible peak current (I peak)		**kA**	11	20
Permissible thermal limit (I^2t)		**kA^2s**	104	300
Degree of protection	Conforming to IEC 60529		IP 20	IP 20
Terminal block			Yes	–

Characteristics of terminal blocks GV2 G05 and GV1 G09 (for GV2 ME and GV2 P)

Rated insulation voltage (Ui)	Conforming to IEC 60947-1	**V**	690
Conventional thermal current (Ith)	Conforming to IEC 60439-1	**A**	63
Degree of protection	Conforming to IEC 60529		IP 20
Connection	Solid cable	**mm^2**	1 x 1.5 to 25 conductor or 2 x 1.5 to 6 conductors
	Flexible cable without cable end	**mm^2**	1 x 1.5 to 16 conductor or 2 x 2.5 to 4 conductors
	Flexible cable with cable end	**mm^2**	1 x 1.5 to 10 conductor or 2 x 1.5 to 2 conductors
	Flexible or solid cable AWG		1 AWG 4
Tightening torque	Connector	**N.m**	2.2
	Screw clamp terminals	**N.m**	1.7

Characteristics of current limiters (GV2 ME and GV2 P)

Type			**GV1 L3**		**LA9 LB920**	
Rated insulation voltage (Ui)	Conforming to IEC 60947-1	**V**	690		690	
Conventional thermal current (Ith)	Conforming to IEC 60947-1	**A**	63		63	
Rated operational current (Ie)		**A**	32		32	
Operating threshold	rms current	**A**	1500 (non adjustable threshold)		1000 (non adjustable threshold)	
Connection			**1 conductor**	**2 conductors**	**1 conductor**	**2 conductors**
	Solid cable	**mm^2**	1.5…25	1.5…10	1.5…25	1.5…10
	Flexible cable without cable end	**mm^2**	1.5…25	2.5…10	1.5…25	1.5…10
	Flexible cable with cable end	**mm^2**	1.5…16	1.5… 4	1.5…16	1.5… 4
Tightening torque		**N.m**	2.2			

References:
page B6/13

Control relays
TeSys SK, K, D

Relays – TeSys SK, K - For control of TeSys K contactor coils and other devices

Type of product		Pages
Mini relay - 2 contacts, simultaneous action TeSys SK, SKE		B7/2
Relays - 4 contacts, simultaneous action TeSys K	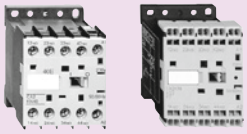	B7/4
Auxiliary contact blocks, accessories		B7/6

Relays – TeSys D - For control of TeSys D contactor coils and other devices

Relays and auxiliary contact blocks 5 contacts, simultaneous action TeSys D		B7/8
Accessories		B7/10

Technical Data for Designers B7/13

Control relays
Mini-control relays
TeSys CA2 SK and CA3 SK
Mini-control relay TeSys CA2 SKE with alternating contacts

PF526254.tif



CA2 SK20●●

Mini-control relays

- Width of mini-control relays 27 mm.
- Mounting on 35 mm ⎓ rail.
- Connection by connectors.

Control circuit supply	Auxiliary contacts		Basic reference, to be completed by adding the voltage code (1)
a.c. supply	2	–	**CA2SK20●●**
	1	1	**CA2SK11●●**
d.c. supply	2	–	**CA3SK20●●**
	1	1	**CA3SK11●●**

PF526255.tif



CA2 SKE20●●

Mini-control relay with alternating contacts

This mini-control relay with alternating contacts (see function diagram page B7/17) makes it possible to automatically split the operating time between 2 circuits of a redundant system.
By regularly energising the “safety circuits”, this device makes it possible to ensure that they are operating correctly.

- Width of mini-control relay 45 mm.
- Fixing by Ø4 screws.
- Connection by connectors.
- Cannot be fitted with front-mounted auxiliary contact block.
- Cannot be fitted with coil suppressor module.

Control circuit supply	Auxiliary contacts		Basic reference, to be completed by adding the voltage code (1)
a.c. supply	2	–	**CA2SKE20●●**

(1) Standard control circuit voltages (for other voltages, please consult your Regional Sales Office):

Mini-control relays CA2 SK and CA2 SKE									
Volts ∿ 50/60 Hz	**24**	**48**	**110**	**120**	**220**	**230**	**240**	**380**	**400**
Code	B7	E7	F7	G7	M7	P7	U7	Q7	V7
Mini-control relays CA3 SK									
Volts ⎓	**12**	**24**	**36**	**48**	**72**				
Code	JD	BD	CD	ED	SD				

Characteristics: pages B7/14 and B7/15
Dimensions: page B7/16
Schemes: page B7/17

Control relays
Mini-control relays
TeSys CA2 SK and CA3 SK
Instantaneous auxiliary contacts and coil suppressor modules

PF526256.tif



LA1 SK11

Instantaneous auxiliary contact blocks

Clip-on front mounting

For use on control relays	Maximum number of blocks per contactor	Composition		Reference
				
CA2SK20	1	2	–	**LA1SK20**
		–	2	**LA1SK02**
		1	1	**LA1SK11**

PF526257.tif



LA4 SK●1●

Suppressor modules

Connection without need for tools by clipping onto right-hand side of contactor

For use on control relays	Type	For voltages	Sold in lots of	Unit reference
CA2SK and **CA3SK**	Varistor (1)	∿ and ⎓ 24 V…48 V	10	**LA4SKE1E**
		∿ and ⎓ 110 V…250 V	10	**LA4SKE1U**
	Diode (2)	⎓ 24 V…250 V	10	**LA4SKC1U**

(1) Protection provided by limiting the transient voltage to 2 Uc max.
Maximum reduction of transient voltage peaks.
Slight increase in drop-out time (1.1 to 1.5 times the normal time).
(2) No overvoltage or oscillating frequency.
Slight increase in drop-out time (1.1 to 1.5 times the normal time).

Characteristics: pages B7/14 and B7/15
Dimensions: page B7/16
Schemes: page B7/17

Control relays

TeSys K control relays

For a.c. or d.c. control circuit

PF526247.tif



CA2 KN40●●

PF526248.tif



CA2 KN403●●

PF526249.tif



CA3 KN407●●

Control relays for a.c. control circuit

- Mounting on 35 mm ⎓ rail or Ø4 screw fixing.
- Screws in the open "ready-to-tighten" position.

Control circuit Consumption	Auxiliary contacts		Basic reference, to be completed by adding the voltage code (1)
Screw clamp connections			
4.5 VA	4	–	**CA2KN40●●**
	3	1	**CA2KN31●●**
	2	2	**CA2KN22●●**
Spring terminal connections			
4.5 VA	4	–	**CA2KN403●●**
	3	1	**CA2KN313●●**
	2	2	**CA2KN223●●**
Faston connectors, 1 x 6.35 or 2 x 2.8			
4.5 VA	4	–	**CA2KN407●●**
	3	1	**CA2KN317●●**
	2	2	**CA2KN227●●**
Solder pins for printed circuit boards			
4.5 VA	4	–	**CA2KN405●●**
	3	1	**CA2KN315●●**
	2	2	**CA2KN225●●**

Control relays for d.c. control circuit

- Mounting on 35 mm ⎓ rail or Ø4 screw fixing.
- Screws in the open "ready-to-tighten" position.

Screw clamp connections			
3 W	4	–	**CA3KN40●●**
	3	1	**CA3KN31●●**
	2	2	**CA3KN22●●**
Spring terminal connections			
3 W	4	–	**CA3KN403●●**
	3	1	**CA3KN313●●**
	2	2	**CA3KN223●●**
Faston connectors, 1 x 6.35 or 2 x 2.8			
3 W	4	–	**CA3KN407●●**
	3	1	**CA3KN317●●**
	2	2	**CA3KN227●●**
Solder pins for printed circuit boards			
3 W	4	–	**CA3KN405●●**
	3	1	**CA3KN315●●**
	2	2	**CA3KN225●●**

(1) Standard control circuit voltages (for other voltages, please consult your Regional Sales Office):
Control relays CA2 K (0.8...1.15 Uc) *(0.85...1.1 Uc)*

Volts ∼ 50/60 Hz	**12**	**20**	**24(2)**	**36**	**42**	**48**	**110**	**115**	**127**	**220/230**	**230**	**230/240**	**380/400**	**400**	**400/415**	**440**	**500**	**660/690**
Code	J7	Z7	B7	C7	D7	E7	F7	FE7	FC7	M7	P7	U7	Q7	V7	N7	R7	S7	Y7

Up to and including 240 V, coil with integral suppression device available: add **2** to the code required. Example: **J72**
Control relays CA3 K (0.8...1.15 Uc)

Volts ⎓	**12**	**20**	**24(2)**	**36**	**48**	**60**	**72**	**100**	**110**	**125**	**200**	**220**	**230**	**240**	**250**
Code	JD	ZD	BD	CD	ED	ND	SD	KD	FD	GD	LD	MD	MPD	MUD	UD

Coil with integral suppression device available: add **3** to the code required. Example: **JD3**.

(2) When connecting an electronic sensor or timer in series with the coil of the control relay, select a 20 V coil (∼ code Z7, ⎓ code ZD) so as to compensate for the incurred voltage drop.

Characteristics: pages B7/18 and B7/19
Dimensions: page B7/20
Schemes: page B7/21

Control relays

TeSys K control relays

For d.c. control circuit

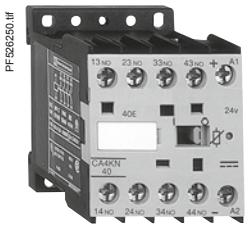

CA4 KN40●●●

Low consumption control relays (d.c. control circuit)

- Mounting on 35 mm ⎓ rail or Ø4 screw fixing.
- Screws in the open "ready-to-tighten" position.

Control circuit Consumption	Auxiliary contacts		Basic reference, to be completed by adding the voltage code (1)
Screw clamp connections			
1.8 W	4	–	**CA4KN40●●**
	3	1	**CA4KN31●●**
	2	2	**CA4KN22●●**
Spring terminal connections			
1.8 W	4	–	**CA4KN403●●**
	3	1	**CA4KN313●●**
	2	2	**CA4KN223●●**
Faston connectors, 1 x 6.35 or 2 x 2.8			
1.8 W	4	–	**CA4KN407●●**
	3	1	**CA4KN317●●**
	2	2	**CA4KN227●●**
Solder pins for printed circuit boards			
1.8 W	4	–	**CA4KN405●●**
	3	1	**CA4KN315●●**
	2	2	**CA4KN225●●**

(1) Standard control circuit voltages (for other voltages, please consult your Regional Sales Office):
Control relays CA4 K (Wide range coil: 0.7...1.3 Uc)

Volts ⎓	**12**	**20**	**24**	**48**	**72**	**110**	**120**
Code	JW3	ZW3	BW3	EW3	SW3	FW3	GW3

Characteristics: pages B7/18 and B7/19
Dimensions: page B7/20
Schemes: page B7/21

Control relays

TeSys K control relays

Instantaneous and time delay auxiliary contact blocks

PF526251.tif



LA1 KN20

PB111966.eps



LA1 K●●●

Instantaneous auxiliary contact blocks

Clip-on front mounting, 1 per control relay

Connection	Composition		Reference
Screw clamp terminals	2	–	**LA1KN20**
	–	2	**LA1KN02**
	1	1	**LA1KN11**
	4	–	**LA1KN40** (1)
	3	1	**LA1KN31** (1)
	2	2	**LA1KN22** (1)
	1	3	**LA1KN13** (1)
	–	4	**LA1KN04** (1)
Spring terminals	2	–	**LA1KN203**
	–	2	**LA1KN023**
	1	1	**LA1KN113**
	4	–	**LA1KN403** (1)
	3	1	**LA1KN313** (1)
	2	2	**LA1KN223** (1)
	1	3	**LA1KN133** (1)
	–	4	**LA1KN043** (1)
Faston connectors 1 x 6.35 or 2 x 2.8	2	–	**LA1KN207**
	–	2	**LA1KN027**
	1	1	**LA1KN117**
	4	–	**LA1KN407** (1)
	3	1	**LA1KN317** (1)
	2	2	**LA1KN227** (1)
	1	3	**LA1KN137** (1)
	–	4	**LA1KN047** (1)

Electronic time delay contact blocks

- Relay output with common point changeover contact, ∼ or ⎓ 240 V, 2 A maximum
- Control voltage 0.85...1.1 Uc
- Maximum switching capacity 250 VA or 150 W
- Operating temperature -10...+ 60 °C
- Reset time: 1.5 s during the time delay period 0.5 s after the time delay period

PF526253.tif



LA2 KT2●

Clip-on front mounting, 1 per control relay

Voltage	Type	Timing range	Composition	Reference
V		s		
∼ or ⎓ 24...48	On-delay	1...30	1	**LA2KT2E**
∼ 110...240	On-delay	1...30	1	**LA2KT2U**

Other versions

Electronic timers type RE4.
Please consult your Regional Sales Office.

*(1) Block of 4 contacts for use on **CA2 K** and **CA3 K**.*

Characteristics : page B7/19
Dimensions : page B7/20
Schemes : page B7/21

Control relays

TeSys K control relays

Mounting and marking accessories

DF533635.eps

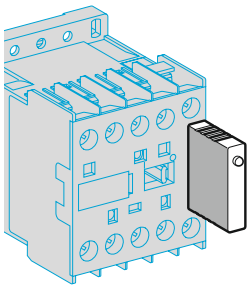

LA4 K●●●

Suppressor modules incorporating LED indicator

Mounting and connection	Type	For voltages	Sold in lots of	Unit reference
Clips onto front of relay with locating device. No tools required.	Varistor (1)	∿ and ⎓ 12...24 V	5	**LA4KE1B**
		∿ and ⎓ 32...48 V	5	**LA4KE1E**
		∿ and ⎓ 50...129 V	5	**LA4KE1FC**
		∿ and ⎓ 130...250 V	5	**LA4KE1UG**
	Diode + Zener diode (2)	⎓ 12...24 V	5	**LA4KC1B**
		⎓ 32...48 V	5	**LA4KC1E**
	RC (3)	∿ 220...250 V	5	**LA4KA1U**

DF533636.eps

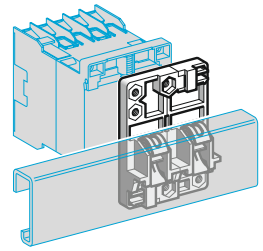

LA9 D973

Mounting accessories

Description	Application		Sold in lots of	Unit reference
Mounting plates	On 1 ⊏⊐ rail	Clip-on	1	**LA9D973**
	On 2 ⊏⊐ rails	110/120 mm fixing centres	10	**DX1AP25**

Marking accessories

Description	Application		Sold in lots of	Unit reference
Marker holder	Clip-on fixing on front face	–	100	**LA9D90**
Clip-in markers	4 maximum per relay	Strips of 10 identical numbers 0 to 9	25	**AB1R●** (4)
		Strips of 10 identical capital letters A to Z	25	**AB1G●** (4)

(1) Protection provided by limiting the transient voltage to 2 Uc max.
Maximum reduction of transient voltage peaks.
Slight increase in drop-out time (1.1 to 1.5 times the normal time).
(2) No overvoltage or oscillating frequency.
Polarised component.
Slight increase in drop-out time (1.1 to 1.5 times the normal time).
(3) Protection by limiting the transient voltage to 3 Uc max. and limitation of the oscillating frequency.
Slight increase in drop-out time (1.2 to 2 times the normal time).
(4) Complete the reference by replacing the dot with the required character.

Control relays

Dimensions : page B7/20

DF5226461.eps

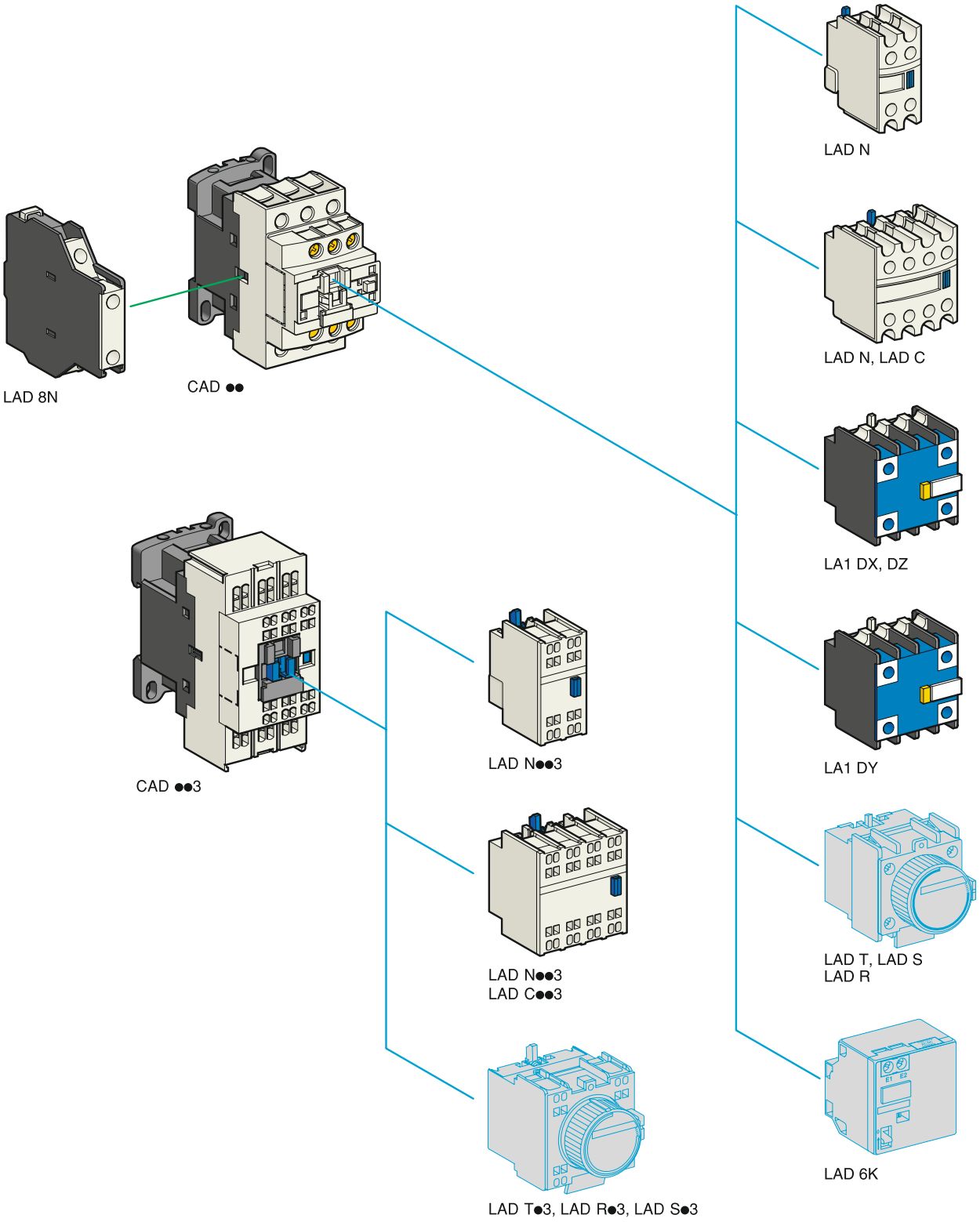

See page opposite for mounting possibilities according to control relay type and rating

TeSys control relays

TeSys D control relays and add-on blocks

Control circuit: a.c., d.c. or low consumption

TeSys D

PF526456.tif



CAD 50●●

PF526457.tif



CAD 32●●

PF526458.tif



CAD 503●●

PF526460.tif



CAD 323●●

Control relays for connection by screw clamp terminals

Type	Number of contacts	Composition		Basic reference, to be completed by adding the control voltage code (1)
Instantaneous	5	5	–	**CAD50●●** (3)
		3	2	**CAD32●●** (3)

Control relays for connection by spring terminals

Instantaneous	5	5	–	**CAD503●●**
		3	2	**CAD323●●**

Instantaneous auxiliary contact blocks for connection by screw clamp terminals

For use in normal operating environments

Number of contacts	Maximum number per relay, Clip-on mounting: front	Maximum number per relay, Clip-on mounting: side	Composition		Reference	
2	1	–	1	1	**LADN11**	
	–	1 on LH side	1	1	**LAD8N11** (6)	
	1	–	2	–	**LADN20**	
	–	1 on LH side	2	–	**LAD8N20** (6)	
	1	–	–	2	**LADN02**	
	–	1 on LH side	–	2	**LAD8N02** (6)	
4 (4)	1	–	2	2	**LADN22**	**LADN22S** (7)
			1	3	**LADN13**	
			4	–	**LADN40**	
			–	4	**LADN04**	
			3	1	**LADN31**	
4 (4)	1	–	2	2	**LADC22**	

Including 1 N/O and 1 N/C make before break.

With dust and damp protected contacts, for use in particularly harsh industrial environments

Number of contacts	Maximum number per relay, Front mounting	Composition: protected (5)			Composition: not protected		Reference
2	1	2	–	–	–	–	**LA1DX20**
		–	2	–	–	–	**LA1DX02**
		2	–	2	–	–	**LA1DY20**
4 (4)	1	2	–	–	2	–	**LA1DZ40**
		2	–	–	1	1	**LA1DZ31**

Instantaneous auxiliary contact blocks for connection by spring terminals

This type of connection is not possible for contact blocks LAD 8 and blocks with dust and damp protected contacts.
For all other instantaneous auxiliary contact blocks, add the digit **3** to the end of the references selected above.
Example: **LAD N11** becomes **LAD N113**.

(1) Standard control circuit voltages (for other voltages, please consult your Regional Sales Office).

a.c. supply												
Volts ∿	**24**	**42**	**48**	**110**	**115**	**220**	**230**	**240**	**380**	**400**	**415**	**440**
50/60 Hz	B7	D7	E7	F7	FE7	M7	P7	U7	Q7	V7	N7	R7

d.c. supply (coils with integral suppression device fitted as standard)											
Volts ⎓	**12**	**24**	**36**	**48**	**60**	**72**	**110**	**125**	**220**	**250**	**440**
U from 0.7 to 1.25 Uc	JD	BD	CD	ED	ND	SD	FD	GD	MD	UD	RD

Low consumption (coils with integral suppression device fitted as standard)								
Volts ⎓	**5**	**12**	**20**	**24**	**48**	**110**	**220**	**250**
Code	AL	JL	ZL	BL	EL	FL	ML	UL

(2) LC: low consumption.
*(3) To order control relays with connection by lugs, add the digit **6** to the end of the selected reference.*
Example: CAD50●● becomes CAD506●●.
(4) Blocks with 4 auxiliary contacts cannot be used on low consumption control relays.
(5) Product fitted with 4 earth screen continuity terminals.
(6) These contact blocks cannot be used on low consumption control relays.
(7) With red front face - for safety chain indication.

Characteristics: pages B7/22 and B7/25
Dimensions: page B7/26
Schemes: page B7/27

TeSys control relays

TeSys D control relays

Add-on blocks

TeSys D

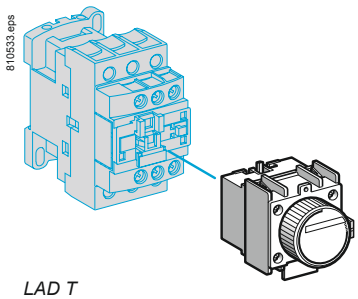

LAD T

Time delay auxiliary contact blocks for connection by screw clamp terminals (1)

Number and type of contacts	Maximum number per relay	Time delay		Reference
	Front mounting	Type	Range	
1 N/C and 1 N/O	1	On-delay	0.1…3 s (2)	**LADT0**
			0.1…30 s	**LADT2**
			10…180 s	**LADT4**
			1…30 s (3)	**LADS2**
		Off-delay	0.1…3 s (2)	**LADR0**
			0.1…30 s	**LADR2**
			10…180 s	**LADR4**

(Sealing cover: see page B8/21)

Time delay auxiliary contact blocks for connection by spring terminals

Add the digit **3** to the references selected above. Example: **LAD T0** becomes **LAD T03**.

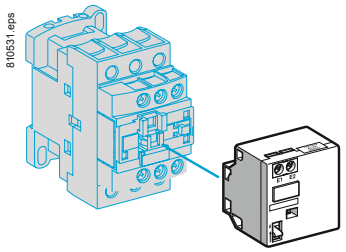

LAD 6K10

Mechanical latch blocks (4)

Unlatching control	Maximum number per relay	Basic reference to be completed (5)
	Front mounting	
Manual or electric	1	**LAD6K10●**

Suppressor modules

These modules clip onto the top of the control relay and the electrical connection is instantly made. Fitting of an input module is still possible.

RC circuits (Resistor-Capacitor)

- Effective protection for circuits highly sensitive to “high frequency” interference.
- Voltage limited to 3 Uc maximum and oscillating frequency limited to 400 Hz maximum.
- Slight time delay on drop-out (1.2 to 2 times the normal time).

For mounting on	Operational voltage	Reference
CAD ∿	∿ 24…48 V	**LAD4RCE**
	∿ 110…240 V	**LAD4RCU**

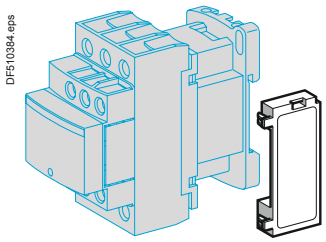

LAD 4●●

Varistors (peak limiting)

- Protection provided by limiting the transient voltage value to 2Uc maximum.
- Maximum reduction of transient voltage peaks.
- Slight time delay on drop-out (1.1 to 1.5 times the normal time).

CAD ∿	∿ 24…48 V	**LAD4VE**
	∿ 50…127 V	**LAD4VG**
	∿ 110…250 V	**LAD4VU**

Freewheel diode

- No overvoltage or oscillating frequency.
- Increase in drop-out time (6 to 10 times the normal time).
- Polarised component.

CAD ⎓	⎓ 24…250 V	**LAD4DDL**

Bidirectional peak limiting diode (6)

- Protection provided by limiting the transient overvoltage value to 2Uc maximum.
- Maximum reduction of transient voltage peaks.

CAD ∿	∿ 24 V	**LAD4TB**
	∿ 72 V	**LAD4TS**
CAD ⎓	⎓ 24 V	**LAD4TBDL**
	⎓ 72 V	**LAD4TSDL**
	⎓ 125 V	**LAD4TGDL**
	⎓ 250 V	**LAD4TUDL**
	⎓ 600 V	**LAD4TXDL**

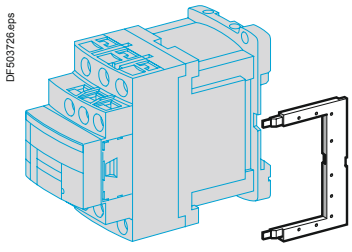

LAD 4●●

(1) These contact blocks cannot be used on low consumption control relays.
(2) With extended scale from 0.1 to 0.6 s.
(3) With switching time of 40 ms ±15 ms between opening of the N/C contact and closing of the N/O contact.
(4) Power should not be simultaneously applied or maintained to the mechanical latching block of the CAD N. The duration of the control signal to the mechanical latching block and the CAD N should be ⩾ 100 ms.
(5) Standard control circuit voltages (for other voltages, please consult your Regional Sales Office):

Volts ∿ and ⎓	24	32/36	42/48	60/72	100	110/127	220/240	256/277	380/415
Code	B	C	E	EN	K	F	M	U	Q

*(6) **CAD ●● ⎓** and low consumption control relays are fitted with a built-in bi-directional peak limiting diode suppressor as standard. On control relays produced after 15th July 2004, this diode is removable. It can therefore be replaced by the user (see references **LAD4T●●●** above). It can also be replaced by a freewheel diode **LAD 4DDL** . If a d.c. or low consumption control replay is used without suppression, the standard suppressor should be replaced with a blanking plug **LAD9DL**.*

Characteristics: pages B7/22 and B7/25 | Illustrations: page B7/8 | Dimensions: page B7/26 | Schemes: page B7/27

TeSys control relays
TeSys D control relays
Accessories and spare parts

TeSys D

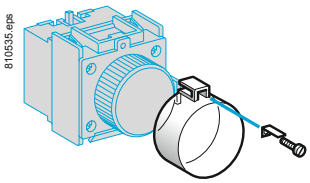

LA9 D901

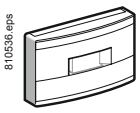

LAD 9ET1

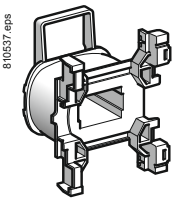

LXD 1

Accessories (to be ordered separately)

Description	For mounting on	Sold in lots of	Unit reference
For marking			
Sheet of 64 blank legends, self-adhesive, 8 x 33 mm	CAD, LAD (4 contacts)	10	**LAD21**
Sheet of 112 blank legends, self-adhesive, 8 x 12 mm	LAD (2 contacts), LAD T		**LAD22**
Strips of blank, self-adhesive legends for printing by plotter (4 sets of 5 strips)	All products	35	**LAD24**
"SIS Label" labelling software for legends LAD 21 and LAD 22, supplied on CD-Rom	Multi-language version: English, French, German, Italian, Spanish	1	**XBY2U**
Legend holder, snap-in, 8 x 18 mm	LC1 D09...38 LC1DT20...40 LADN (4 contacts) LAD T, LAD R	100	**LAD90**
For protection			
Sealing cover	LAD T, LAD R	1	**LA9D901**
Safety cover preventing access to the moving contact carrier	CAD	1	**LAD9ET1**
Red cover (for safety chain indication)	CAD	1	**LAD9ET1S**

Spare parts: coils

Specifications

- Average consumption at 20 °C:
  - inrush (cos φ = 0.75) 50/60 Hz: 70 VA at 50 Hz,
  - sealed (cos φ = 0.3) 50/60 Hz: 8 VA at 60 Hz,
- Operating range (θ < 60 °C): 0.85 to 1.1 Uc

Control circuit voltage Uc	Average resistance at 20 °C ±10 %	Inductance of closed circuit	Reference (1) 50/60 Hz
V	V	H	
12	6.3	0.26	**LXD1J7**
21 (2)	5.6	0.24	**LXD1Z7**
24	6.19	0.26	**LXD1B7**
32	12.3	0.48	**LXD1C7**
36	–	–	**LXD1CC7**
42	19.15	0.77	**LXD1D7**
48	25	1	**LXD1E7**
60	–	–	**LXD1EE7**
100	–	–	**LXD1K7**
110	130	5.5	**LXD1F7**
115	–	–	**LXD1FE7**
120	159	6.7	**LXD1G7**
127	192.5	7.5	**LXD1FC7**
200	–	–	**LXD1L7**
208	417	16	**LXD1LE7**
220/230	539	22	**LXD1M7** (3)
230	595	21	**LXD1P7**
230/240	645	25	**LXD1U7** (4)
277	781	30	**LXD1W7**
380/400	1580	60	**LXD1Q7**
400	1810	64	**LXD1V7**
415	1938	74	**LXD1N7**
440	2242	79	**LXD1R7**
480	2300	85	**LXD1T7**
500	2499	–	**LXD1S7**
575	3294	–	**LXD1SC7**
600	3600	135	**LXD1X7**
690	5600	190	**LXD1Y7**

(1) The last 2 digits in the reference represent the voltage code.
(2) Voltage for special coils fitted in control relays with serial timer module with 24 V supply.
(3) This coil can be used on 240 V at 60 Hz.
(4) This coil can be used on 230/240 V at 50 Hz and on 240 V only at 60 Hz.

Characteristics: pages B7/22 and B7/25
Dimensions: page B7/26
Schemes: page B7/27

TeSys SK, K, D

Technical Data for Designers

Contents

TeSys SK:
> characteristics ..... B7/14 and B7/15
> dimensions B7/16
> schemes B7/17

TeSys K:
> characteristics ..... B7/18 and B7/19
> dimensions B7/20
> schemes B7/21

TeSys D:
> characteristics ..... B7/22 to B7/25
> dimensions B7/26
> schemes B7/27

Control relays

Mini-control relays TeSys CA● SK and CA2 SKE

TeSys SK

Environment

Rated insulation voltage (Ui)	Conforming to IEC 60947, VDE 0110 gr C, BS 5424, CSA 22-2 n° 14, UL 508	**V**	690
Conforming to standards			IEC 60947, NF C 63-110, VDE 0660, BS 5424
Product certifications			UL, CSA
Protective treatment	Conforming to IEC 60068 (DIN 50015)		"TC" (Klimafest, Climateproof)
Degree of protection	Conforming to VDE 0106		Protection against direct finger contact
Ambient air temperature around the device	Storage	**°C**	-50…+70
	Operation	**°C**	-20…+50
Maximum operating altitude	Without derating	**m**	2000

Operating position

Vertical axis

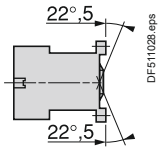

Without derating

Horizontal axis

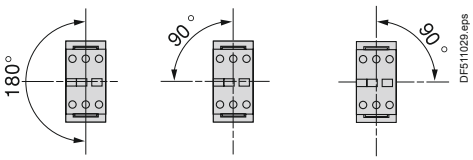

Without derating

			Min.	Max.
Connection by connectors	Solid cable	**mm²**	1 x 1.5 or 2 x 1.5	1 x 6 or 2 x 4
	Flexible cable without cable end	**mm²**	1 x 0.5 or 2 x 0.35	1 x 6 or 2 x 2.5
	Flexible cable with cable end	**mm²**	1 x 0.35 or 2 x 0.35	1 x 6 or 2 x 1.5
Tightening torque	Pozidriv n° 1 head	**N.m**	0.8	
Terminal referencing	Conforming to standards EN 50005 and EN 50011		Up to 4 contacts	

Control circuit characteristics

Control relay			**CA2 SK**	**CA2 SKE**	**CA3 SK**
Rated control circuit voltage (Uc)		**V**	∿ 24…400		⎓ 12…72
Control voltage limits (≤ 50 °C)	For operation		0.85…1.1 Uc		0.85…1.1 Uc
	For drop-out		≤ 0.20 Uc		≤ 0.10 Uc
Average consumption at 20 °C and at Uc	Inrush		16 VA	23 VA	2.2 W
	Sealed		4.2 VA	4.9 VA	2.2 W
Heat dissipation		**W**	1.4	1.5	2.2
Operating time at 20 °C and at Uc	Between coil energisation and opening of the N/C contacts	**ms**	8…16		10…18
	Between coil energisation and closing of the N/O contacts	**ms**	7…14		8…12
	Between coil de-energisation and opening of the N/O contacts	**ms**	6…8		4…6
	Between coil de-energisation and closing of the N/C contacts	**ms**	8…10		6…8
Maximum operating rate	In operating cycles per hour		1200		1200
Mechanical durability at Uc in millions of operating cycles	50/60 Hz coil		10		–
	Standard ⎓ coil		–		10

References: pages B7/2 and B7/3
Dimensions: page B7/16
Schemes: page B7/17

Control relays

Mini-control relays TeSys CA● SK and CA2 SKE

TeSys SK

Auxiliary contact characteristics of mini-control relays and instantaneous contact blocks

Rated operational voltage (Ue)		**V**	Up to 690
Rated insulation voltage (Ui)	Conforming to IEC 96047, BS 5424, VDE 0110 group C, CSA C 22-2 n° 14	**V**	690
Conventional rated thermal current (Ith)	For ambient temperature ≤ 55 °C	**A**	10
Frequency of the operational current		**Hz**	Up to 400
Short-circuit protection	Conforming to IEC 60947 and VDE 0660, gl fuse	**A**	10

Operational power of contacts conforming to IEC 60947

a.c. supply, category AC-15

Electrical durability (valid for up to 3600 operating cycles/hour) on an inductive load such as the coil of an electromagnet: making current (cos φ 0.7) = 10 times the power broken (cos φ 0.4).

	V	24	48	110/127	220/230	380/400	440
1 million operating cycles	**VA**	48	96	240	440	800	880
3 million operating cycles	**VA**	17	34	86	158	288	317
10 million operating cycles	**VA**	7	14	36	66	120	132
Occasional making capacity	**VA**	1000	2050	5000	10000	14000	13 000

d.c. supply, category DC-13

Electrical durability (valid for up to 1200 operating cycles/hour) on an inductive load such as the coil of an electromagnet, without economy resistor, the time constant increasing with the load.

	V	24	48	110	220	440
1 million operating cycles	**W**	120	80	60	52	51
3 million operating cycles	**W**	55	38	30	28	26
10 million operating cycles	**W**	15	11	9	8	7
Occasional making capacity	**W**	720	600	400	300	230

Control relays

References: pages B7/2 and B7/3
Dimensions: page B7/16
Schemes: page B7/17

Control relays

Mini-control relays TeSys CA● SK and CA2 SKE

TeSys SK

Dimensions

Mini-control relays

CA2 SK and CA3 SK

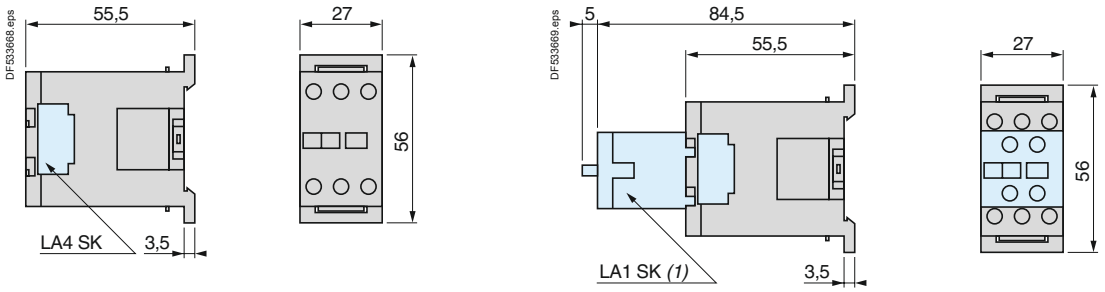

(1) Only on CA2 SK20.

Mounting

Mini-control relays

CA2 SK and CA3 SK

On mounting rail AM1 DP200 or AM1 DE200 (╍ 35 mm)

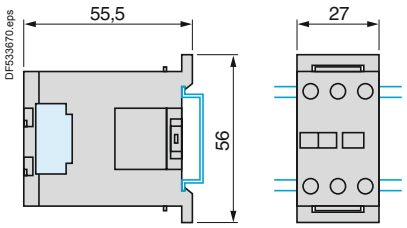

Dimensions

CA2 SKE

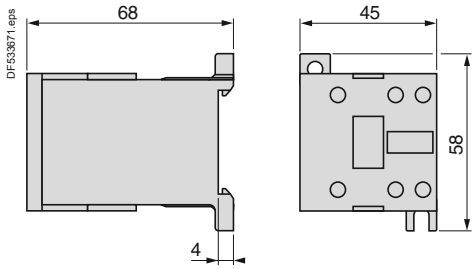

Mounting

CA2 SKE

On panel

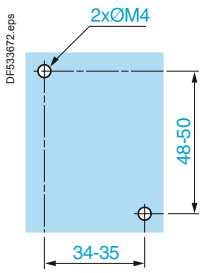

On mounting rail AM1 DP200 or AM1 DE200 (╍ 35 mm)

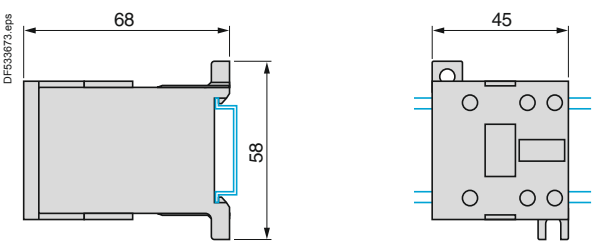

References:
pages B7/2 and B7/3

Characteristics:
pages B7/14 and B7/15

Schemes:
page B7/17

Control relays

Mini-control relays TeSys CA● SK and CA2 SKE

Schemes

CA2 SK20, CA3 SK20

2 N/O

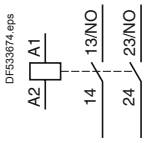

CA2 SK11, CA3 SK11

1 N/O + 1 N/C

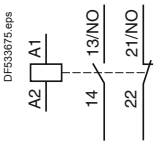

CA2 SKE

2 N/O

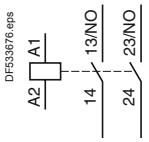

CA2 SKE

Function diagram

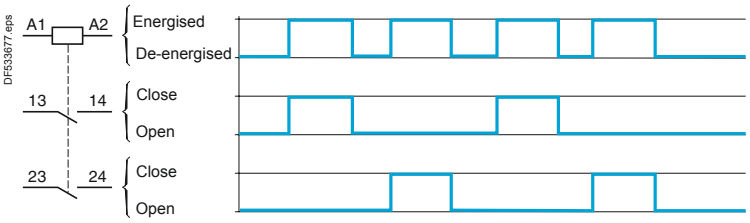

Instantaneous auxiliary contacts

2 N/O

LA1 SK20

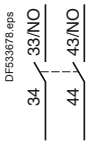

2 N/C

LA1 SK02

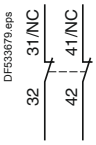

1 N/O + 1 N/C

LA1 SK11

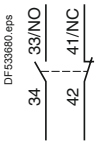

Control relays

Control relays
TeSys K control relays

TeSys K

Environment

Conforming to standards			IEC 60947, NF C 63-140, VDE 0660, BS 5424		
Product certifications			UL, CSA		
Operating positions			**Vertical axis** 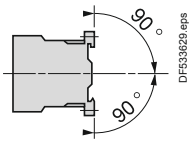 Without derating	**Horizontal axis** 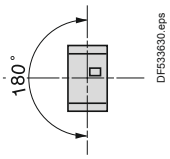 Without derating	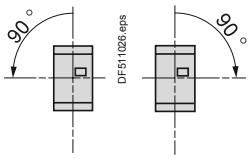 Possible positions for **CA2 K** only, with derating, please consult your Regional Sales Office.
Connection			**Min.**	**Max.**	**Max. to IEC 60947**
Screw clamp connections	Solid cable	**mm²**	1 x 1.5	2 x 4	1 x 4 + 1 x 2.5
	Flexible cable without cable end	**mm²**	1 x 0.75	2 x 4	2 x 2.5
	Flexible cable with cable end	**mm²**	1 x 0.34	1 x 1.5 + 1 x 2.5	1 x 1.5 + 1 x 2.5
Spring terminals	Solid cable	**mm²**	1 x 0.75	1 x 1.5	2 x 1.5
	Flexible cable without cable end	**mm²**	1 x 0.75	1 x 1.5	2 x 1.5
Faston connectors	Clip	**mm**	2 x 2.8 or 1 x 6.35		
Solder pins for printed circuit board	With locating device between power and control circuits		4 mm x 35 microns		
Tightening torque	Philips head n° 2 and Ø6	**N.m**	0.8…1.3		
Terminal referencing	Conforming to standards EN 50005 and EN 50011		Up to 8 contacts		
Protective treatment	Conf. to IEC 60068 (DIN 50016)		"TC" (Klimafest, Climateproof)		
Degree of protection	Conforming to VDE 0106		Protection against direct finger contact (devices with screw clamp terminals or pins for printed circuit board)		
Ambient air temperature around the device	Storage	**°C**	-50...+80		
	Operation	**°C**	-25...+50		
Maximum operating altitude	Without derating	**m**	2000		
Vibration resistance	Control relay open		2 gn		
5...300 Hz	Control relay closed		4 gn		
Flame resistance	Conforming to UL 94		Self-extinguishing material V1		
	Conforming to NF F 16-101 and 16-102		Conforming to requirement 2		
Shock resistance (1/2 sine wave, 11 ms)	Control relay open		10 gn		
	Control relay closed		15 gn		
Safety separation of circuits	Conforming to VDE 0106 and IEC 60536		SELV (Safety Extra Low Voltage), up to 400 V		

Control circuit characteristics

Control relay type			**CA2 K**	**CA3 K**	**CA4 K**
Rated control circuit voltage (Uc)		**V**	∿ 12...690	⎓ 12...250	⎓ 12...120
Control voltage limits (y 50 °C) single voltage coil	For operation		0.8...1.15 Uc	0.8...1.15 Uc	0.7...1.3 Uc
	For drop-out		≤ 0.2 Uc	≤ 0.1 Uc	≤ 0.1 Uc
Mechanical durability at Uc In millions of operating cycles	50/60 Hz coil		10	–	–
	Standard ⎓ coil		–	20	–
	Wide range, low consumption ⎓ coil		–	–	30
Maximum operating rate	In operating cycles per hour		10 000	10 000	6000
Average consumption at 20 °C and at Uc	Inrush		30 VA	3 W	1.8 W
	Sealed		4.5 VA	3 W	1.8 W
Heat dissipation		**W**	1.3	3	1.8
Operating time at 20 °C and at Uc	Between coil energisation and opening of the N/C contacts	**ms**	5...15	25...35	25...35
	closing of the N/O contacts	**ms**	10...20	30...40	30...40
	Between coil de-energisation and opening of the N/O contacts	**ms**	10...20	10	10...20
	closing of the N/C contacts	**ms**	15...25	15	15...25
Maximum immunity to microbreaks		**ms**	2	2	2

References: pages B7/4 to B7/7
Dimensions: page B7/20
Schemes: page B7/21

Control relays
TeSys K control relays

TeSys K

Contact characteristics of control relays and instantaneous contact blocks

Number of auxiliary contacts	On **CA● K**		4
	On **LA1 K**		2 or 4 for **CA2 K** and **CA3 K**, 2 for **CA4 K**
Rated operational voltage (Ue)	Up to	**V**	690
Rated insulation voltage (Ui)	Conforming to BS 5424	**V**	690
	Conforming to IEC 60947	**V**	690
	Conforming to VDE 0110 group C	**V**	750
	Conforming to CSA C 22-2 n° 14	**V**	600
Conventional thermal current (Ith)	For ambient temperature ≤ 50 °C	**A**	10
Frequency of the operational current		**Hz**	Up to 400
Minimum switching capacity	U min (DIN 19 240)	**V**	17
	I min	**mA**	5
Short-circuit protection	Conforming to IEC 60947 and VDE 0660, gG fuse	**A**	10
Rated making capacity	Conforming to IEC 60947		
	I rms	**A**	110
Short-time rating	Permissible for		
	1 s	**A**	80
	500 ms	**A**	90
	100 ms	**A**	110
Insulation resistance		**MΩ**	> 10
Non-overlap distance	CA● K and LA1 K: linked contacts conforming to INRS, BIA and CNA specifications	**mm**	0.5 (see schemes page B7/21)

Operational power of contacts conforming to IEC 60947

a.c. supply, category AC-15

Electrical durability (valid for up to 3600 operating cycles/hour) on an inductive load such as the coil of an electromagnet: making current (cos φ 0.7) = 10 times the power broken (cos φ 0.4)

	V	24	48	110/127	220/230	380/400	440	600/690
1 million operating cycles	**VA**	48	96	240	440	800	880	1200
3 million operating cycles	**VA**	17	34	86	158	288	317	500
10 million operating cycles	**VA**	7	14	36	66	120	132	200
Occasional making capacity	**VA**	1000	2050	5000	10000	14000	13000	9000

d.c. supply, category DC-13

Electrical durability (valid for up to 1200 operating cycles/hour) on an inductive load such as the coil of an electromagnet, without economy resistor, the time constant increasing with the load.

	V	24	48	110	220	440	600
1 million operating cycles	**W**	120	80	60	52	51	50
3 million operating cycles	**W**	55	38	30	28	26	25
10 million operating cycles	**W**	15	11	9	8	7	6
Occasional making capacity	**W**	720	600	400	300	230	200

1 Breaking limit of contacts valid for:
■ maximum of 50 operating cycles at 10 s intervals (power broken = making current x cos φ 0.7).

2 Electrical durability of contacts for:
■ 1 million operating cycles (2a)
■ 3 million operating cycles (2b)
■ 10 million operating cycles (2c).

3 Breaking limit of contacts valid for:
■ maximum of 20 operating cycles at 10 s intervals with current passing for 0.5 s per operating cycle.

4 Thermal limit

Power broken in VA

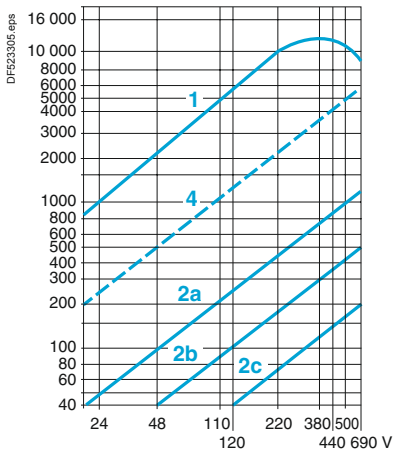

Power broken in W

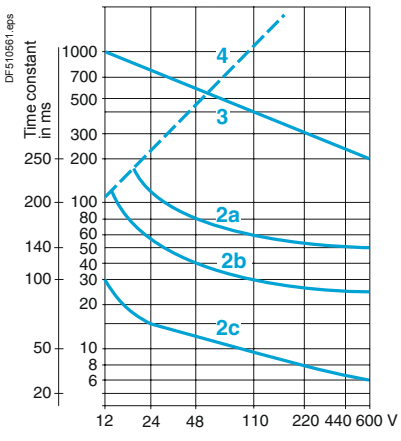

References:
pages B7/4 to B7/7

Dimensions:
page B7/20

Schemes:
page B7/21

Control relays
TeSys K control relays

TeSys K

Control relays
CA2 K, CA3 K, CA4 K
On panel

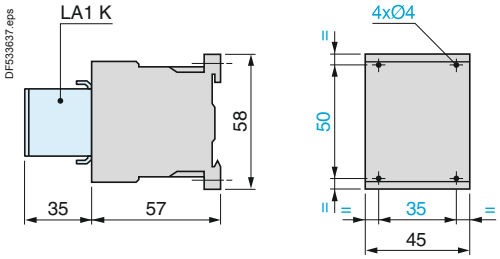

On printed circuit board

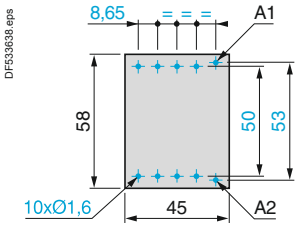

On mounting rail AM1 DP200 or AM1 DE200 (, 35 mm)

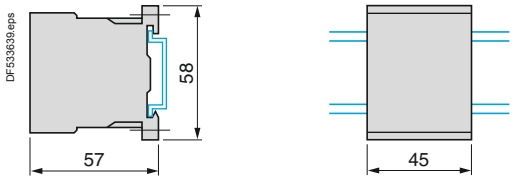

LA9 D973
On asymmetrical rail with clip-on mounting plates

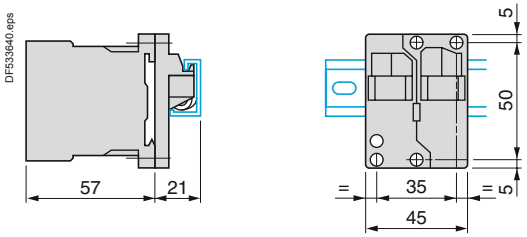

DX1 AP25
On asymmetrical rail with clip-on mounting plates

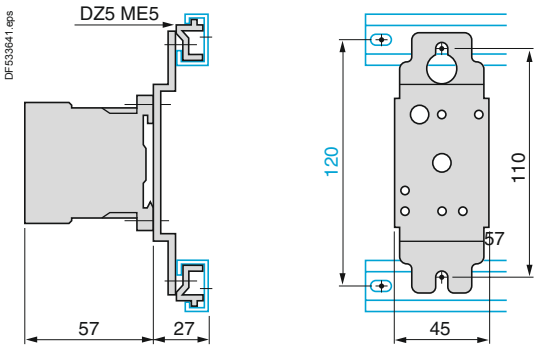

Electronic time delay contact blocks
LA2 KT



On control relay

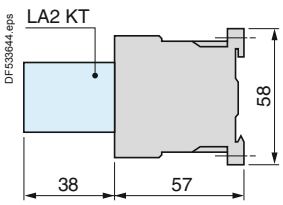

Suppressor modules
LA4 K

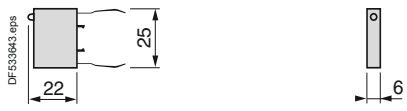

On control relay

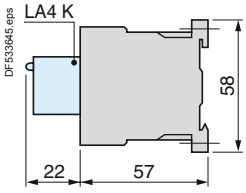

References:
pages B7/4 to B7/7

Characteristics:
pages B7/18 and B7/19

Schemes:
page B7/21

Control relays
TeSys K control relays

TeSys K

Control relays
CA2 K, CA3 K, CA4 K

4 N/O

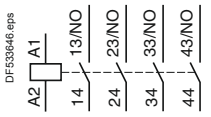

3 N/O + 1 N/C

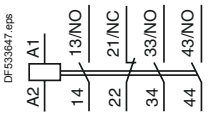

2 N/O + 2 N/C

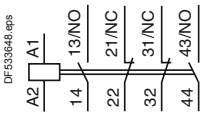

With integral suppression device

CA3 K

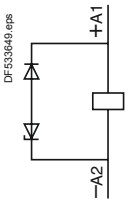

CA4 K

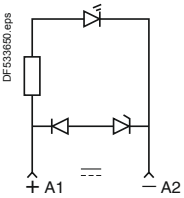

Instantaneous auxiliary contact blocks LA1 K
For CA2 K, CA3 K, CA4 K

2 N/O

LA1 KN20, LA1 KN207

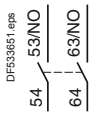

2 N/C

LA1 KN02, LA1 KN027

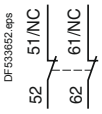

1 N/O + 1 N/C

LA1 KN11, LA1 KN117



For CA2 K, CA3 K

4 N/O

LA1 KN40, LA1 KN407



3 N/O + 1 N/C

LA1 KN31, LA1 KN317

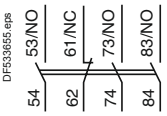

2 N/O + 2 N/C

LA1 KN22, LA1 KN227

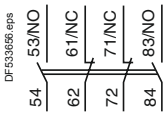

1 N/O + 3 N/C

LA1 KN13, LA1 KN137

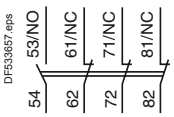

4 N/C

LA1 KN04, LA1 KN047

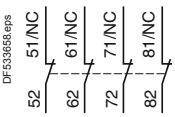

Electronic time delay contact blocks LA2 KT
For CA2 K, CA3 K, CA4 K

1 C/O

LA2 KT2

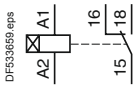

Suppressor modules

LA4 KC

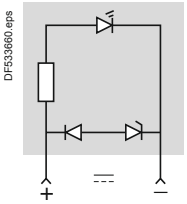

LA4 KE

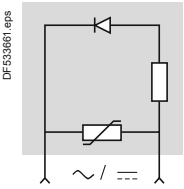

References:
pages B7/4 to B7/7

Characteristics:
pages B7/18 and B7/19

Dimensions:
page B7/20

TeSys control relays
TeSys D control relays

TeSys D

Environment

Control relay type				CAD ~	CAD ⎓	CAD ⎓ low consumption
Rated insulation voltage (Ui)	Conforming to IEC 60947-5-1 Overvoltage category III and degree of pollution 3		**V**	690	690	690
	Conforming to UL, CSA		**V**	600	600	600
Rated impulse withstand voltage (Uimp)	Conforming to IEC 60947		**kV**	6	6	6
Separation of electrical circuits	Conforming to IEC 60536 and VDE 0106			Reinforced insulation up to 400 V		
Conforming to standards				IEC 60947-5-1, N-F C 63-140, VDE 0660, BS 4794, EN 60947-5		
Product certifications				UL, CSA		
Protective treatment	Conforming to IEC 60068			"TH"		
Degree of protection	Conforming to VDE 0106			Front face protected against direct finger contact IP 2X		Protection against direct finger contact
Ambient air temperature around the device	Storage		**°C**	-60…+80	-60…+80	-60…+80
	Operation, conforming to IEC 60255 (0.8…1.1 UC)		**°C**	-5…+60	-5…+60	-5…+60
	For operation at Uc		**°C**	-40…+70	-40…+70	-40…+70
Maximum operating altitude	Without derating		**m**	3000	3000	3000
Operating positions	Without derating in the following positions			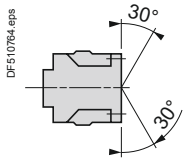 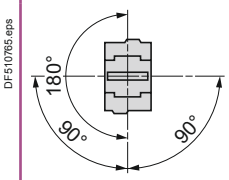		
	Positions that are not allowed				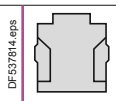 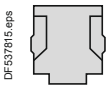	
Shock resistance (1) half sine wave for 11ms	Control relay open			10 gn	10 gn	10 gn
	Control relay closed			15 gn	15 gn	15 gn
Vibration resistance (1) 5…300 Hz	Control relay open			2 gn	2 gn	2 gn
	Control relay closed			4 gn	4 gn	4 gn
Screw clamp connections	Flexible conductor without cable end	1 conductor	**mm²**	1…4	1…4	1…4
		2 conductors	**mm²**	1…4	1…4	1…4
	Flexible conductor with cable end	1 conductor	**mm²**	1…4	1…4	1…4
		2 conductors	**mm²**	1…2.5	1…2.5	1…2.5
	Solid conductor without cable end	1 conductor	**mm²**	1…4	1…4	1…4
		2 conductors	**mm²**	1…4	1…4	1…4
	Tightening torque		**N.m**	1.7	1.7	1.7
Spring terminal connections	1 or 2 flexible or rigid conductors without cable end		**mm²**	1…2.5	1…2.5	1…2.5

(1) In the least favourable direction, without change of contact state, with coil supplied at Uc.

References: pages B7/9 to B7/11
Dimensions: page B7/26
Schemes: page B7/27

TeSys control relays
TeSys D control relays

TeSys D

Control circuit characteristics

Control relay type			CAD ~	CAD ⎓	CAD low consumption
Rated control circuit voltage (Uc)		**V**	12…690	12…440	⎓ 5…72
Control voltage limits					
Operation	With coil 50/60 Hz		0.8…1.1 Uc at 50 Hz	–	–
			0.85…1.1 Uc at 60 Hz	–	–
	With standard coil, wide range		–	0.7…1.25 Uc	0.7…1.25 Uc
Drop-out			0.3…0.6 Uc	0.1…0.25 Uc	0.1…0.25 Uc
Average consumption at 20 °C and at Uc	~ 50/60 Hz (at 50 Hz)	**VA**	Inrush: 70	–	–
			sealed: 8	–	–
	With standard coil	**W**	–	Inrush or sealed: 5.4	Inrush or sealed: 2.4
Operating time (at rated control circuit voltage and at 20 °C)	Between coil energisation and - opening of the N/C contacts	**ms**	4…19	55 ± 15 %	67 ± 15 %
	- closing of the N/O contacts	**ms**	12…22	63 ± 15 %	77 ± 15 %
	Between coil de-energisation and - opening of the N/O contacts	**ms**	4…12	20 ± 20 %	27 ± 20 %
	- closing of the N/C contacts	**ms**	6…17	25 ± 20 %	35 ± 20 %
Short supply failure	Maximum duration without affecting hold-in of the device	**ms**	2	2	2
Maximum operating rate	In operating cycles per second		3	3	3
Mechanical durability In millions of operating cycles	With coil 50/60 Hz (at 50 Hz)		30	–	–
	With standard coil ⎓ wide range		–	30	30
Time constant L/R		**ms**	–	28	40

References: pages B7/9 to B7/11
Dimensions: page B7/26
Schemes: page B7/27

TeSys control relays
TeSys D control relays

TeSys D

Characteristics of instantaneous contacts incorporated in the control relay

Number of contacts				5
Rated operational voltage (Ue)	Up to		**V**	690
Rated insulation voltage (Ui)	Conforming to IEC 60947-5-1		**V**	690
	Conforming to UL, CSA		**V**	600
Conventional thermal current (Ith)	For ambient temperature ≤ 60 °C		**A**	10
Frequency of the operational current			**Hz**	25...400
Minimum switching capacity	U min		**V**	17
	I min		**mA**	5
Short-circuit protection	Conforming to IEC 60947-5-1			gG fuse: 10 A
Rated making capacity	Conforming to IEC 60947-5-1	I rms		∼ 140, ⎓ 250
Short-time rating	Permissible for	1 s	**A**	100
		500 ms	**A**	120
		100 ms	**A**	140
Insulation resistance			**MΩ**	> 10
Non-overlap time	Guaranteed between N/C and N/O contacts		**ms**	1.5 (on energisation and on de-energisation)
Tightening torque	Philips head n° 2 and Ø6		**N.m**	1.2
Non-overlap distance				Linked contacts in association with auxiliary contacts LAD N
Mechanically linked contacts	Conforming to IEC 60947-5-1			The 3 N/O contacts and the 2 N/C contacts of CAD N32 are linked mechanically by one mobile contact carrier.

References:
pages B7/9 to B7/11

Dimensions:
page B7/26

Schemes:
page B7/27

TeSys control relays
TeSys D control relays

TeSys D

Rated operational power of contacts (conforming to IEC 60947-5-1)

a.c. supply, categories AC-14 and AC-15

Electrical durability (valid for up to 3600 operating cycles/hour) on an inductive load such as the coil of an electromagnet:
making current (cos φ 0.7) = 10 times the power broken (cos φ 0.4).

	V	24	48	115	230	400	440	600
1 million operating cycles	VA	60	120	280	560	960	1050	1440
3 million operating cycles	VA	16	32	80	160	280	300	420
10 million operating cycles	VA	4	8	20	40	70	80	100

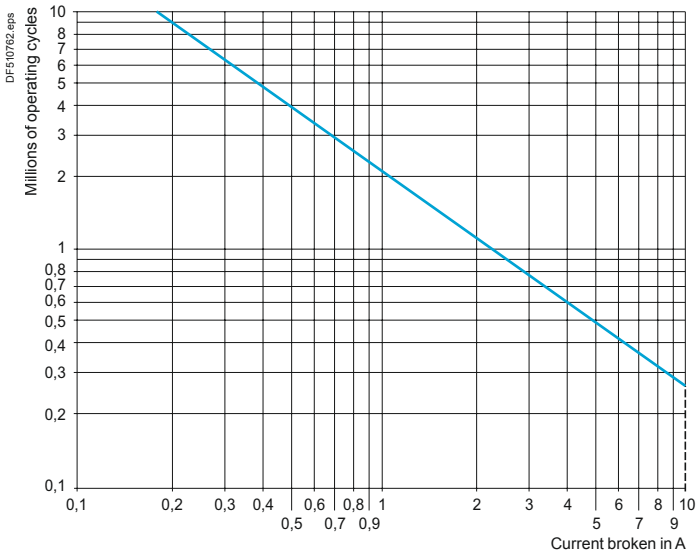

d.c. supply, category DC-13

Electrical durability (valid for up to 1200 operating cycles/hour) on an inductive load such as the coil of an electromagnet, without economy resistor, the time constant increasing with the power.

	V	24	48	125	250	440
1 million operating cycles	W	120	90	75	68	61
3 million operating cycles	W	70	50	38	33	28
10 million operating cycles	W	25	18	14	12	10

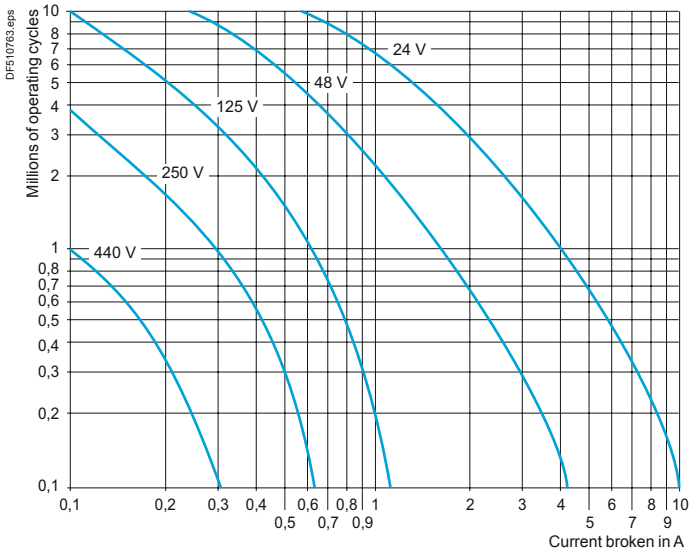

Control relays

TeSys D

Dimensions

CAD ∼

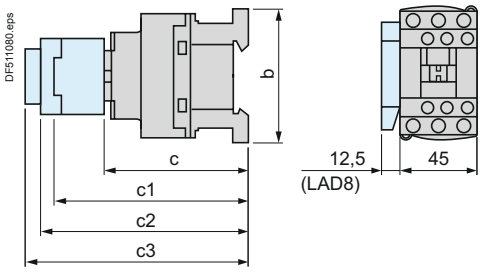

CAD		32 50	323 503
b		77	99
c	without cover or add-on blocks	84	84
	with cover, without add-on blocks	86	86
c1	with LAD N or C (2 or 4 contacts)	117	117
c2	with LAD 6K10	129	129
c3	with LAD T, R, S	137	137
	with LAD T, R, S and sealing cover	141	141

CAD ⎓ or LC (low consumption)

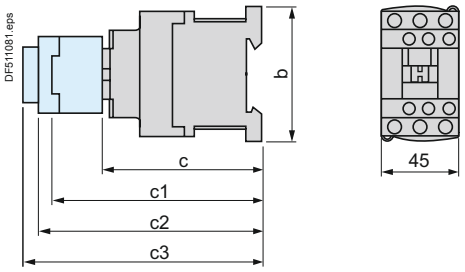

CAD		32 50	323 503
b		77	99
c	without cover or add-on blocks	93	93
	with cover, without add-on blocks	95	95
c1	with LAD N or C (2 or 4 contacts)	126	126
c2	with LAD 6K10	138	138
c3	with LAD T, R, S	146	146
	with LAD T, R, S and sealing cover	150	150

Mounting

CAD

Panel mounted

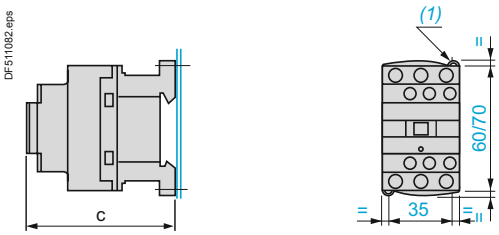

		CAD ∼	CAD ⎓ or LC
c	with cover	86	95

(1) 2 elongated holes 4.5 x 9.

Mounted on rail AM1 DP200 or DE200

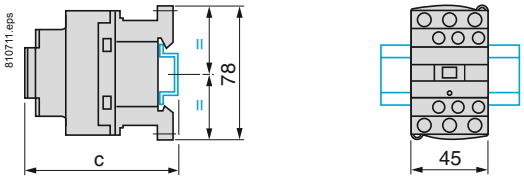

		CAD ∼	CAD ⎓ or LC
c	(AM1 DP200) (2)	88	97
c	(AM1 DP200) (2)	96	105

(2) With cover.

Mounted on plate AM1 P

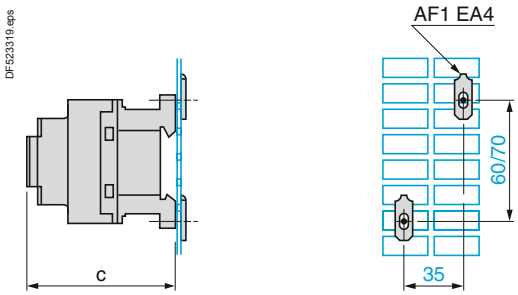

		CAD ∼	CAD ⎓ or LC
c	with cover	86	95

References:
pages B7/9 to B7/11

Illustration:
page B7/8

Characteristics:
pages B7/22 and B7/25

Schemes:
page B7/27

TeSys control relays

TeSys D control relays and add-on blocks

TeSys D

Instantaneous auxiliary contacts

5 N/O

CAD 50

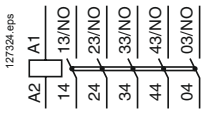

3 N/O + 2 N/C

CAD 32

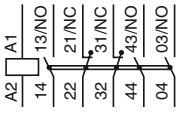

Instantaneous auxiliary contact blocks

1 N/O + 1 N/C

LAD N11

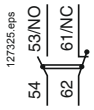

LAD 8N11 (1)

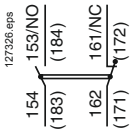

2 N/O

LAD N20

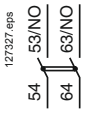

LAD 8N20 (1)

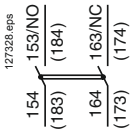

2 N/C

LAD 8N02

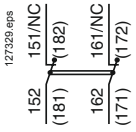

LAD N02

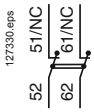

(1) The figures in brackets are for the device mounted on the RH side of the control relay.

2 N/O + 2F N/C

LAD N22

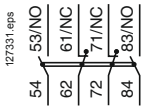

1 N/O + 3 N/C

LAD N13

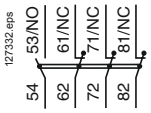

4 N/O

LAD N40

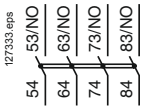

4 N/C

LAD N04

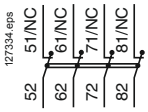

3 N/O + 1 N/C

LAD N31

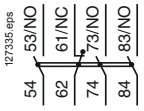

2 N/O + 2 N/C including 1 N/O + 1 N/C make before break

LAD C22

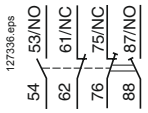

With dust and damp protected contacts

2 N/O protected

LA1 DX20

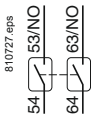

2 N/C protected

LA1 DX02

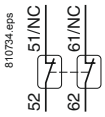

2 N/O protected (2)

LA1 DY20

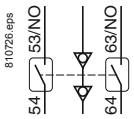

2 N/O protected + 2 N/O non protected

LA1 DZ40

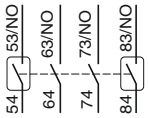

2 N/O protected + 1 N/O + 1 N/C non protected

LA1 DZ31

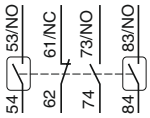

(2) Product fitted with 4 earth screen continuity terminals.

Time delay auxiliary contact blocks

On-delay 1 N/O + 1 N/C

LAD T

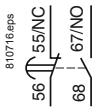

LAD S

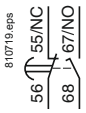

Off-delay 1 N/O + 1 N/C

LAD R

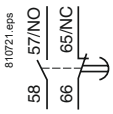

Mechanical latch blocks

LAD 6K10

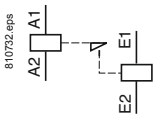

Contactors
TeSys SK, K, D, SKGC, GC, GY, GF

Contactors – TeSys D			
Contactors with standard coils	From **9** to **150** A		B8/2
Contactors with low consumption coils	From **9** to **65** A		B8/3
Contactors conforming to UL and CSA	From **25** to **160** A		B8/8
Reversing pre-assembled contactors	From **9** to **150** A		B8/9
Contactors for capacitor banks switching	From **12.5** to **60** kVAR		B8/13
Auxiliary contact blocks – accessories – spare coils			B8/14

Mini contactors – TeSys SK, K			
Type of product	**Range**		**Pages**
Mini contactors TeSys SK	Up to **6** A		B8/31
Mini contactors TeSys K	From **6** to **16** A		B8/33
Reversing pre-assembled mini contactors TeSys K	From **6** to **16** A	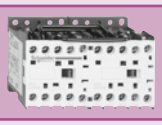	B8/37
Auxiliary contact blocks - accessories			B8/43

Contactors for use in modular enclosures / Din rail			
Mini contactors TeSys SKGC	Up to **20** A		B8/46
Modular contactors TeSys GC	From **16** to **100** A		B8/48
Dual tariff contactors TeSys GY	**16**, **25**, **40** or **100** A		B8/49
Impulse relay TeSys GF	Up to **16** A		B8/50
Auxiliary contact blocks - accessories TeSys GC, GY			B8/51

TeSys contactors

TeSys D contactors for motor control up to 75 kW at 400 V, in category AC-3

For connection by screw clamp terminals and lugs

PF526216R.eps



LC1 D09●●

PF526217R.eps



LC1 D25●●

PF526218R.eps



LC1 D65A●●

PF526219R.eps



LC1 D95●●

PF526220-34-MR.eps



LC1 D115●●

3-pole contactors

Standard power ratings of 3-phase motors 50-60 Hz in category AC-3 (θ ≤ 60 °C)							Rated operational current in AC-3 440 V up to	Instantaneous auxiliary contacts		Basic reference, to be completed by adding the control voltage code [2] / Fixing [1]	Weight [3]
220 V 230 V	380 V 400 V	415 V	440 V	500 V	660 V 690 V	1000 V					
kW	kW	kW	kW	kW	kW	kW	A				kg
Connection by screw clamp terminals											
2.2	4	4	4	5.5	5.5	–	9	1	1	**LC1D09●●**	0.320
3	5.5	5.5	5.5	7.5	7.5	–	12	1	1	**LC1D12●●**	0.325
4	7.5	9	9	10	10	–	18	1	1	**LC1D18●●**	0.330
5.5	11	11	11	15	15	–	25	1	1	**LC1D25●●**	0.370
7.5	15	15	15	18.5	18.5	–	32	1	1	**LC1D32●●**	0.375
9	18.5	18.5	18.5	18.5	18.5	–	38	1	1	**LC1D38●●**	0.380
Power connections by EverLink® BTR screw connectors [4] and control by screw clamp terminal											
11	18.5	22	22	22	30	–	40	1	1	**LC1D40A●●** [5]	0.850
15	22	25	30	30	33	–	50	1	1	**LC1D50A●●** [5]	0.855
18.5	30	37	37	37	37	–	65	1	1	**LC1D65A●●** [5]	0.860
Connection by screw clamp terminals or connectors											
22	37	45	45	55	45	45	80	1	1	**LC1D80●●**	1.590
25	45	45	45	55	45	45	95	1	1	**LC1D95●●**	1.610
30	55	59	59	75	80	65	115	1	1	**LC1D115●●**	2.500
40	75	80	80	90	100	75	150	1	1	**LC1D150●●**	2.500

Connection by lugs or bars

In the references selected above, insert a figure **6** before the voltage code.
Example: **LC1 D09●●** becomes **LC1 D096●●**.

Separate components

Auxiliary contact blocks and add-on modules: see pages B8/15 to B8/21.

(1) LC1 D09 to D65A: clip-on mounting on 35 mm ⊔ rail AM1 DP or screw fixing.
LC1 D80 to D95 ∿: clip-on mounting on 35 mm ⊔ rail AM1 DP or 75 mm ⊔ rail AM1 DL or screw fixing.
LC1 D80 to D95 ⎓: clip-on mounting on 75 mm ⊔ rail AM1 DL or screw fixing.
LC1 D115 and D150: clip-on mounting on 2 x 35 mm ⊔ rails AM1 DP or screw fixing.
(2) Standard control circuit voltages (for other voltages, please consult your Regional Sales Office):

a.c. supply													
Volts	**24**	**42**	**48**	**110**	**115**	**220**	**230**	**240**	**380**	**400**	**415**	**440**	**500**
LC1 D09…D150 (D115 and D150 coils with built-in suppression as standard, by bi-directional peak limiting diode).													
50/60 Hz	B7	D7	E7	F7	FE7	M7	P7	U7	Q7	V7	N7	R7	S7
LC1 D80…D115													
50 Hz	B5	D5	E5	F5	FE5	M5	P5	U5	Q5	V5	N5	R5	S5
60 Hz	B6	–	E6	F6	–	M6	–	U6	Q6	–	–	R6	–

d.c. supply											
Volts	**12**	**24**	**36**	**48**	**60**	**72**	**110**	**125**	**220**	**250**	**440**
LC1 D09…D65A (coils with integral suppression device fitted as standard)											
U 0.75…1.25 Uc	JD	BD	CD	ED	ND	SD	FD	GD	MD	UD	RD
LC1 D80…D95											
U 0.85…1.1 Uc	JD	BD	CD	ED	ND	SD	FD	GD	MD	UD	RD
U 0.75…1.2 Uc	JW	BW	CW	EW	–	SW	FW	–	MW	–	–
LC1 D115 and D150 (coils with integral suppression device fitted as standard)											
U 0.75…1.2 Uc	–	BD	–	ED	ND	SD	FD	GD	MD	UD	RD

Low consumption								
Volts ⎓	**5**	**12**	**20**	**24**	**48**	**110**	**220**	**250**
LC1 D09...D38 (coils with integral suppression device fitted as standard)								
U 0.8…1.25 Uc	AL	JL	ZL	BL	EL	FL	ML	UL

For other voltages between 5 and 690 V, see pages B8/25 to B8/28.
*(3) The weights indicated are for contactors with a.c. control circuit. For d.c. or low consumption control circuit, add 0.160 kg from **LC1 D09** to **D38**, 0.075 kg from **LC1 D40A** to **D65A** and 1 kg for **LC1 D80** and **D95**.*
*(4) BTR screws: hexagon socket head. In accordance with local electrical wiring regulations, a size 4 insulated Allen key must be used (reference **LAD ALLEN4**, see page B8/21).*
*(5) For low consumption kit **LA4 DBL** (see page B8/19).*

TeSys contactors

TeSys D contactors for motor control up to 30 kW at 400 V, in category AC-3

For connection by spring terminals

PF526221R.eps

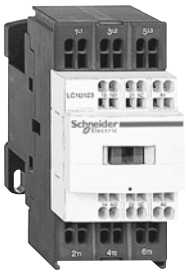

LC1 D123●●

PF526222R.eps

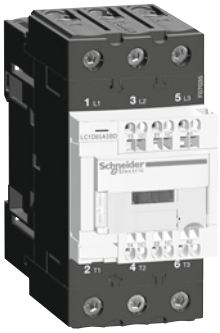

LC1 D65A3●●

3-pole contactors

Standard power ratings of 3-phase motors 50-60 Hz in category AC-3 (θ ≤ 60 °C)							Rated operational current in AC-3 440 V up to	Instantaneous auxiliary contacts		Basic reference, to be completed by adding the control voltage code [2]
220 V 230 V	380 V 400 V	415 V	440 V	500 V	660 V 690 V	1000 V				Fixing [1]
kW	kW	kW	kW	kW	kW	kW	A			
Power and control connections by spring terminals										
2.2	4	4	4	5.5	5.5		9	1	1	**LC1D093●●**
3	5.5	5.5	5.5	7.5	7.5		12	1	1	**LC1D123●●**
4	7.5	9	9	10	10		18	1	1	**LC1D183●●**
5.5	11	11	11	15	15		25	1	1	**LC1D253●●**
7.5	15	15	15	18.5	18.5		32 [4]	1	1	**LC1D323●●**
Power connections by EverLink® BTR screw connectors [5] and control by spring terminals										
11	18.5	22	22	22	30		40	1	1	**LC1D40A3●●** [6]
15	22	25	30	30	33		50	1	1	**LC1D50A3●●** [6]
18.5	30	37	37	37	37		65	1	1	**LC1D65A3●●** [6]

Connection by Faston connectors

These contactors are fitted with Faston connectors: 2 x 6.35 mm on the power poles and 1 x 6.35 mm on the coil and auxiliary terminals.
For contactors LC1 D09 and LC1 D12 only, replace the figure **3** with a **9** in the references selected above.
Example: **LC1 D093●●** becomes **LC1 D099●●**.

Separate components

Auxiliary contact blocks and add-on modules: see pages B8/15 to B8/21.

(1) LC1 D09 to D32: clip-on mounting on 35 mm ⊔ rail AM1 DP or screw fixing.
(2) Standard control circuit voltages (for other voltages, please consult your Regional Sales Office):

a.c. supply												
Volts	**24**	**42**	**48**	**110**	**115**	**220**	**230**	**240**	**380**	**400**	**415**	**440**
LC1 D09…D65A												
50/60 Hz	B7	D7	E7	F7	FE7	M7	P7	U7	Q7	V7	N7	R7
d.c. supply												
Volts	**12**	**24**	**36**	**48**	**60**	**72**	**110**	**125**	**220**	**250**	**440**	
LC1 D09…D65A (coils with built-in suppression as standard, by bi-directional peak limiting diode)												
U 0.75…1.25 Uc	JD	BD	CD	ED	ND	SD	FD	GD	MD	UD	RD	
Low consumption												
Volts ⎓	**5**	**12**	**20**	**24**	**48**	**110**	**220**	**250**				
LC1 D09...D32 (coils with integral suppression device fitted as standard)												
U 0.8…1.25 Uc	AL	JL	ZL	BL	EL	FL	ML	UL				

For other voltages between 5 and 690 V, see pages B8/25 to B8/28.
(3) The weights indicated are for contactors with a.c. control circuit.
*For d.c. or low consumption control circuit, add 0.160 kg from **LC1 D09** to **D32** and 0.075 kg from **LC1 D40A** to **D65A**.*
*(4) Must be wired with 2 x 4 mm² cables in parallel on the upstream side. On the downstream side, outgoing terminal block **LAD 331** may be used (Quickfit technology, see page B1/18). When wired with a single cable, the product is limited to 25 A (11 kW/400 V motors).*
*(5) BTR screws: hexagon socket head. In accordance with local electrical wiring regulations, a size 4 insulated Allen key must be used (reference **LAD ALLEN4**, see page B8/21).*
*(6) For low consumption kit **LA4 DBL** (see page B8/19).*

TeSys contactors

TeSys D, 3-pole contactors

For control in category AC-1, from 25 to 200 A

TeSys D

PF526230R.eps



LC1 D09●●

PF526231R.eps



LC1 D65A●●

3-pole contactors

Non inductive loads maximum current ($\theta \leq 60$ °C) utilisation category AC-1	Number of poles	Instantaneous auxiliary contacts		Basic reference, to be completed by adding the control voltage code (1) / Fixing (2)	Weight (3)
A					kg
Connection by screw clamp terminals					
25	3	1	1	**LC1D09●●**	0.320
				or **LC1D12●●**	0.325
32	3	1	1	**LC1D18●●**	0.330
40	3	1	1	**LC1D25●●**	0.370
50	3	1	1	**LC1D32●●**	0.375
				or **LC1D38●●**	0.380
Connection by EverLink®, BTR screw connectors (4)					
60	3	1	1	**LC1D40A●●** (7)	0.850
80	3	1	1	**LC1D50A●●** (7)	0.855
				or **LC1D65A●●** (5)(7)	0.860
Connection by screw clamp terminals or connectors					
125	3	1	1	**LC1D80●●**	1.590
				or **LC1D95●●** (5)	1.610
200	3	1	1	**LC1D115●●**	2.500
				or **LC1D150●●** (6)	2.500

3-pole contactors for connection by lugs

In the references selected above, insert a figure **6** before the voltage code.
Example: **LC1 D09●●** becomes **LC1 D096●●**.

(1) Standard control circuit voltages (for other voltages, please consult your Regional Sales Office):

a.c. supply													
Volts	**24**	**42**	**48**	**110**	**115**	**220**	**230**	**240**	**380**	**400**	**415**	**440**	**500**
LC1 D09...D150 (coils D115 and D150 fitted with integral suppression device as standard)													
50/60 Hz	B7	D7	E7	F7	FE7	M7	P7	U7	Q7	V7	N7	R7	–
LC1 D80...D150													
50 Hz	B5	D5	E5	F5	FE5	M5	P5	U5	Q5	V5	N5	R5	S5
60 Hz	B6	–	E6	F6	–	M6	–	U6	Q6	–	–	R6	–

d.c. supply												
Volts	**12**	**24**	**36**	**48**	**60**	**72**	**110**	**125**	**220**	**250**	**440**	
LC1 D09...D65A (coils with integral suppression device fitted as standard)												
U 0.7…1.25 Uc	JD	BD	CD	ED	ND	SD	FD	GD	MD	UD	RD	
LC1 or LP1 D80 and **D95**												
U 0.85…1.1 Uc	JD	BD	CD	ED	ND	SD	FD	GD	MD	UD	RD	
U 0.75…1.2 Uc	JW	BW	CW	EW	–	SW	FW	–	MW	–	–	
LC1 D115 and **D150** (coils with integral suppression device fitted as standard)												
U 0.75…1.2 Uc	–	BD	–	ED	ND	SD	FD	GD	MD	UD	RD	

Low consumption								
Volts ⎓	**5**	**12**	**20**	**24**	**48**	**110**	**220**	**250**
LC1 D09...D38 (coils with integral suppression device fitted as standard)								
U 0.8…1.25 Uc	AL	JL	ZL	BL	EL	FL	ML	UL

For other voltages between 5 and 690 V, see pages B8/25 to B8/28.

*(2) **LC1 D09** to **D65A**: clip-on mounting on 35 mm ⊔ rail **AM1 DP** or screw fixing.*
__LC1 D80__ and __D95__ ∿: clip-on mounting on 35 mm ⊔ rail __AM1 DP__ or 75 mm ⊔ rail __AM1 DL__ or screw fixing.
__LC1__ or __LP1 D80__ to __D95__ ⎓: clip-on mounting on 75 mm ⊔ rail __AM1 DL__ or screw fixing.
__LC1 D115__ and __D150__: clip-on mounting on 2 x 35 mm ⊔ rails __AM1 DP__ or screw fixing.

(3) The weights indicated are for contactors with a.c. control circuit. For d.c. or low consumption control circuit, add 0.160 kg from __LC1 D09__ to __D38__, 0.075 kg from __LC1 D40A__ to __D65A__ and 1 kg for __LC1 D80__ and __D95__.

(4) BTR screws: hexagon socket head. In accordance with local electrical wiring regulations, a size 4 insulated Allen key must be used (reference __LAD ALLEN4__, see page B8/21).

(5) Selection according to the number of operating cycles, see AC-1 curve, page A6/28.

(6) 32 A with 2 x 4 mm² cables connected in parallel.

(7) For low consumption kit __LA4 DBL__ (see page B8/19).

TeSys contactors

TeSys D, 3-pole contactors

For control in category AC-1, from 25 to 200 A

PF526232R.eps



LC1 D123●●

PF526233R.eps



LC1 D65A3●●

3-pole contactors for connection by Faston connectors

These contactors are fitted with Faston connectors: 2 x 6.35 mm on the power poles and 1 x 6.35 mm on the coil terminals. For contactors LC1 D09 and LC1 D12 only, in the references selected from the previous page, insert a figure **9** before the voltage code. Example: **LC1 D09●●** becomes **LC1 D099●●**.

3-pole contactors

Non inductive loads maximum current ($\theta \leq 60$ °C) utilisation category AC-1	Number of poles	Instantaneous auxiliary contacts		Basic reference, to be completed by adding the control voltage code [1] / Fixing [2]		Weight [3]
A						**kg**
Connection by spring terminals						
16	3	1	1		**LC1D093●●** [4]	0.320
				or	**LC1D123●●** [4]	0.325
25	3	1	1		**LC1D183●●** [5]	0.335
				or	**LC1D253●●** [6]	0.325
				or	**LC1D323●●** [6]	0.325
Power connections by EverLink® BTR screw connectors [7] and control by spring terminals						
60	3	1	1		**LC1D40A3●●** [9]	0.850
80	3	1	1		**LC1D50A3●●** [8] [9]	0.855
				or	**LC1D65A3●●** [8] [9]	0.860

Separate components

Auxiliary contact blocks and add-on modules: see pages B8/15 to B8/21.

(1) Standard control circuit voltages (for other voltages, please consult your Regional Sales Office):

a.c. supply													
Volts	**24**	**42**	**48**	**110**	**115**	**220**	**230**	**240**	**380**	**400**	**415**	**440**	**500**
LC1 D09...D65A													
50/60 Hz	B7	D7	E7	F7	FE7	M7	P7	U7	Q7	V7	N7	R7	S7
d.c. supply													
Volts	**12**	**24**	**36**	**48**	**60**	**72**	**110**	**125**	**220**	**250**	**440**		
LC1 D09...D65A (coils with integral suppression device fitted as standard)													
U 0.75…1.25 Uc	JD	BD	CD	ED	ND	SD	FD	GD	MD	UD	RD		
Low consumption													
Volts ⎓	**5**	**12**	**20**	**24**	**48**	**110**	**220**	**250**					
LC1 D09...D38 (coils with integral suppression device fitted as standard)													
U 0.8…1.25 Uc	AL	JL	ZL	BL	EL	FL	ML	UL					

For other voltages between 5 and 690 V, see pages B8/25 to B8/28.
*(2) **LC1 D09** to **D65A**: clip-on mounting on 35 mm ⊥ rail **AM1 DP** or screw fixing.*
*(3) The weights indicated are for contactors with a.c. control circuit. For d.c. or low consumption control circuit, add 0.160 kg from **LC1 D09** to **D38** and 0.075 kg from **LC1 D40A** to **D65A**.*
(4) 20 A with 2 x 2.5 mm² cables connected in parallel.
(5) 32 A with 2 x 4 mm² cables connected in parallel.
(6) 40 A with 2 x 4 mm² cables connected in parallel.
*(7) BTR screws: hexagon socket head. In accordance with local electrical wiring regulations, a size 4 insulated Allen key must be used (reference **LAD ALLEN4**, see page B8/21).*
(8) Selection according to the number of operating cycles, see AC-1 curve, page A6/28.
*(9) For low consumption kit **LA4 DBL** (see page B8/19).*

TeSys contactors

TeSys D, 4-pole contactors

For control in category AC-1, 25 to 200 A

TeSys D

PF526227R.eps



LC1 DT20●●

4-pole contactors for connection by screw clamp terminals or connectors

Non inductive loads maximum current ($\theta \leq 60$ °C) utilisation category AC-1	Number of poles		Instantaneous auxiliary contacts		Basic reference, to be completed by adding the control voltage code (1) Fixing (2)	Weight (3)
A						kg
Connection by screw clamp terminals						
20	4	–	1	1	**LC1DT20●●**	0.365
	2	2	1	1	**LC1D098●●**	0.365
25	4	–	1	1	**LC1DT25●●**	0.365
	2	2	1	1	**LC1D128●●**	0.365
32	4	–	1	1	**LC1DT32●●**	0.425
	2	2	1	1	**LC1D188●●**	0.425
40	4	–	1	1	**LC1DT40●●**	0.425
	2	2	1	1	**LC1D258●●**	0.425

PF526228R.eps



LC1 DT80A●●

Connection by EverLink®, BTR screw connectors						
60	4	–	1	1	**LC1DT60A●●**	1.090
80	4	–	1	1	**LC1DT80A●●**	1.150
Connection by screw clamp terminals or connectors						
60	2	2	–	–	**LC1D40008●●**	1.440
					or **LP1D40008●●**	2.210
80	2	2	–	–	**LC1D65008●●**	1.450
					or **LP1D65008●●**	2.220
125	4	–	–	–	**LC1D80004●●**	1.760
					or **LP1D80004●●**	2.685
	2	2	–	–	**LC1D80008●●**	1.840
					or **LP1D80008●●**	2.910
200	4	–	–	–	**LC1D115004●●**	2.860

PF526229R.eps



LC1 D65008●●

4-pole contactors for connection by lugs or bars

In the references selected above, insert a figure 6 before the voltage code.
Example: **LC1 DT20●●** becomes **LC1 DT206●●**.

(1) Standard control circuit voltages (for other voltages, please consult your Regional Sales Office):

a.c. supply													
Volts	**24**	**42**	**48**	**110**	**115**	**220**	**230**	**240**	**380**	**400**	**415**	**440**	**500**
LC1 D09...D150 and LC1 DT20...DT80A (coils D115 and D150 fitted with integral suppression device as standard)													
50/60 Hz	B7	D7	E7	F7	FE7	M7	P7	U7	Q7	V7	N7	R7	–
LC1 D80...D115													
50 Hz	B5	D5	E5	F5	FE5	M5	P5	U5	Q5	V5	N5	R5	S5
60 Hz	B6	–	E6	F6	–	M6	–	U6	Q6	–	–	R6	–

d.c. supply											
Volts	**12**	**24**	**36**	**48**	**60**	**72**	**110**	**125**	**220**	**250**	**440**
LC1 D09...D65A and LC1 DT20...DT80A (coils with integral suppression device fitted as standard)											
U 0.7…1.25 Uc	JD	BD	CD	ED	ND	SD	FD	GD	MD	UD	RD
LC1 or LP1D40...D80											
U 0.85…1.1 Uc	JD	BD	CD	ED	ND	SD	FD	GD	MD	UD	RD
U 0.75…1.2 Uc	JW	BW	CW	EW	–	SW	FW	–	MW	–	–
LC1 D115 (coils with integral suppression device fitted as standard)											
U 0.75…1.2 Uc	–	BD	–	ED	ND	SD	FD	GD	MD	UD	RD

Low consumption								
Volts ⎓	**5**	**12**	**20**	**24**	**48**	**110**	**220**	**250**
LC1 D09...D38 and LC1 DT20...DT40 (coils with integral suppression device fitted as standard)								
U 0.8…1.25 Uc	AL	JL	ZL	BL	EL	FL	ML	UL

For other voltages between 5 and 690 V, see pages B8/25 to B8/28.

*(2) **LC1 D09** to **D38** and **LC1 DT20** to **DT80A**: clip-on mounting on 35 mm ⊔ rail **AM1 DP** or screw fixing.*
*__LC1 D80__ ∿: clip-on mounting on 35 mm ⊔ rail **AM1 DP** or 75 mm ⊔ rail **AM1 DL** or screw fixing.*
*__LC1__ or __LP1 D80__ ⎓: clip-on mounting on 75 mm ⊔ rail **AM1 DL** or screw fixing.*
*__LC1 D115__ and __D150__: clip-on mounting on 2 x 35 mm ⊔ rails **AM1 DP** or screw fixing.*

*(3) The weights indicated are for contactors with a.c. control circuit. For d.c. or low consumption control circuit, add 0.160 kg from **LC1 D09** to **D38**, 0.075 kg from **LC1 DT60A** and **D80A** and 1 kg for **LC1 D80**.*

Selection: pages A6/23 to A6/47
Characteristics: pages B8/55 to B8/60
Dimensions: pages B8/67 to B8/70
Schemes: pages B8/71 and B8/72

TeSys contactors

TeSys D, 4-pole contactors

For control in category AC-1, 25 to 200 A

4-pole contactors

Non inductive loads maximum current ($\theta \leq 60$ °C) utilisation category AC-1	Number of poles		Instantaneous auxiliary contacts		Basic reference, to be completed by adding the voltage code [1] / Fixing [2]	Weight [3]
	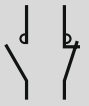					
A						kg
Connection by spring terminals						
20	4	–	1	1	**LC1DT203●●**	0.380
	2	2	1	1	**LC1D0983●●**	0.380
25	4	–	1	1	**LC1DT253●●**	0.380
	2	2	1	1	**LC1D1283●●**	0.380
32	4	–	1	1	**LC1DT323●●**	0.425
	2	2	1	1	**LC1D1883●●**	0.425
40	4	–	1	1	**LC1DT403●●**	0.425
	2	2	1	1	**LC1D2583●●**	0.425
Connection by EverLink®, BTR screw connectors and control circuit by spring terminals						
60	4	–	1	1	**LC1DT60A3●●**	1.090
80	4	–	1	1	**LC1DT80A3●●**	1.150

Separate components

Auxiliary contact blocks and add-on modules: see pages B8/15 to B8/21.

(1) Standard control circuit voltages (for other voltages, please consult your Regional Sales Office):

a.c. supply													
Volts	**24**	**42**	**48**	**110**	**115**	**220**	**230**	**240**	**380**	**400**	**415**	**440**	**500**
LC1 D09...D25 and LC1 DT20...DT80A (coils with integral suppression device fitted as standard)													
50/60 Hz	B7	D7	E7	F7	FE7	M7	P7	U7	Q7	V7	N7	R7	–

d.c. supply											
Volts	**12**	**24**	**36**	**48**	**60**	**72**	**110**	**125**	**220**	**250**	**440**
LC1 D09...D25 and LC1 DT20...DT80A (coils with integral suppression device fitted as standard)											
U 0.7…1.25 Uc	JD	BD	CD	ED	ND	SD	FD	GD	MD	UD	RD

Low consumption								
Volts ⎓	**5**	**12**	**20**	**24**	**48**	**110**	**220**	**250**
LC1 D09...D25 and LC1 DT20...DT40 (coils with integral suppression device fitted as standard)								
U 0.8…1.25 Uc	AL	JL	ZL	BL	EL	FL	ML	UL

For other voltages between 5 and 690 V, see pages B8/25 to B8/28.

*(2) **LC1 D09** to **D38** and **LC1 DT20** to **DT80A**: clip-on mounting on 35 mm ⊥⊥ rail **AM1DP** or screw fixing.*

*(3) The weights indicated are for contactors with a.c. control circuit. For d.c. or low consumption control circuit, add 0.160 kg from **LC1 D09** to **D38**, 0.075 kg for **LC1 DT60A** and **DT80A**.*

TeSys contactors

For the North American market,
Conforming to UL and CSA standards
25 to 160 A

TeSys D



LC1 D09●●



LC1 D25●●



LC1 D65A●●



LC1 D95●●

Contactors

Standard power ratings of motors 50/60 Hz						Associated cable type 75 °C-Cu	Continuous current	Type of contactor required Basic reference, to be completed (1)
Single-phase 1 Ø		3-phase 3 Ø						Fixing, connection (2)
115 V	230 V 240 V	200 V 208 V	230 V 240 V	460 V 480 V	575 V 600 V			
HP	HP	HP	HP	HP	HP		A	
Connection by screw clamp terminals								
1/3	1	2	2	5	7.5	AWG 18 - 10	25	**LC1D09●●**
0.5	2	3	3	7.5	10	AWG 18 - 10	25	**LC1D12●●**
1	3	5	5	10	15	AWG 18 - 8	32	**LC1D18●●**
2	3	7.5	7.5	15	20	AWG 14 - 6	40	**LC1D25●●**
2	5	10	10	20	25	AWG 14 - 6	50	**LC1D32●●**
Power connections by EverLink® BTR screw connectors (4) and control by spring terminals								
3	5	10	10	30	30	AWG 16 - 2	60	**LC1D40A●●**
3	7.5	15	15	40	40	AWG 16 - 2	70	**LC1D50A●●**
5	10	20	20	40	50	AWG 16 - 2	80	**LC1D65A●●**
Connection by screw clamp terminals or connectors								
7.5	15	25	30	60	60	AWG 10 - 2	110	**LC1D80●●**
7.5	15	25	30	60	60	AWG 10 - 2	110	**LC1D95●●**
–	–	30	40	75	100	AWG 2/0	160	**LC1D115●●**
–	–	40	50	100	125	AWG 3/0	160	**LC1D150●●**

Applications with High-Fault Short-Circuit ratings

For contactors LC1 D40A to LC1 D65A, the High-Fault Short-Circuit ratings are 50 kA at 480 V and 25 kA at 600 V.

Application example

For a 15 HP-230 V motor

Select a contactor type **LC1 D50A**.

Information: the contactor rating selected corresponds to “size 2”, the associated cable is type AWG3 75 °C-Cu.

(1) Standard control circuit voltages (for other voltages, please consult your Regional Sales Office):

a.c. supply																	
Volts	**24**	**42**	**48**	**110**	**115**	**120**	**208**	**220**	**230**	**240**	**380**	**400**	**415**	**440**	**480**	**500**
LC1 D09…D150 (D115 and D150 coils with integral suppression device fitted as standard)																
50/60 Hz	B7	D7	E7	F7	FE7	G7	LE7	M7	P7	U7	Q7	V7	N7	R7	T7	S7
LC1 D80…D115																
50 Hz	B5	D5	E5	F5	FE5	G5	–	M5	P5	U5	Q5	V5	N5	R5	–	S5
60 Hz	B6	–	E6	F6	–	G6	L6	M6	–	U6	Q6	–	–	R6	T6	–

d.c. supply											
Volts	**12**	**24**	**36**	**48**	**60**	**72**	**110**	**125**	**220**	**250**	**440**
LC1 D09…D65A (coils with integral suppression device fitted as standard)											
U 0.7…1.25 Uc	JD	BD	CD	ED	ND	SD	FD	GD	MD	UD	RD
LC1 D80 and D95											
U 0.85…1.1 Uc	JD	BD	CD	ED	ND	SD	FD	GD	MD	UD	RD
U 0.75…1.2 Uc	JW	BW	CW	EW	–	SW	FW	–	MW	–	–
LC1 D115 and D150 (coils with integral suppression device fitted as standard)											
U 0.75…1.2 Uc	–	BD	–	ED	ND	SD	FD	GD	MD	UD	RD

Low consumption									
Volts ⎓	**5**	**12**	**20**	**24**	**48**	**72**	**110**	**220**	**250**
LC1 D09…D38 (coils with integral suppression device fitted as standard)									
U 0.7…1.25 Uc	AL	JL	ZL	BL	EL	SL	FL	ML	UL

*(2) **LC1 D09** to **D65A**: clip-on mounting on 35 mm ⊥ rail **AM1 DP** or screw fixing.*
__LC1 D80__ and __LC1 D95__: clip-on mounting on 35 mm ⊥ rail __AM1 DP__ or 75 mm ⊥ rail __AM1 DL__ or screw fixing.
__LC1 D115__ and __D150__: clip-on mounting on 2 x 35 mm ⊥ rails __AM1 DP__ or screw fixing.

TeSys contactors

TeSys D, 3-pole reversing contactors for motor control up to 75 kW at 400 V, in category AC-3 Horizontally mounted, pre-assembled


DF526172R.eps

LC2 D12●●


DF526173R.eps

LC2 D65A●●


DF526175R.eps

LC2 D115●●

3-pole reversing contactors for connection by screw clamp terminals

Pre-wired power connections.

Standard power ratings of 3-phase motors 50-60 Hz in category AC-3 (θ ≤ 60 °C)							Rated operational current in AC-3 440 V up to	Instantaneous auxiliary contacts per contactor		Contactors supplied with coil Basic reference, to be completed by adding the control voltage code [2]	Weight [3]
220 V 230 V	380 V 400 V	415 V	440 V	500 V	660 V 690 V	1000 V				Fixing [1]	
kW	kW	kW	kW	kW	kW	kW	A				kg
With mechanical interlock, without electrical interlocking, for connection by screw clamp terminals or connectors											
2.2	4	4	4	5.5	5.5	–	9	1	1	**LC2D09●●** [4]	0.687
3	5.5	5.5	5.5	7.5	7.5	–	12	1	1	**LC2D12●●** [4]	0.697
4	7.5	9	9	10	10	–	18	1	1	**LC2D18●●** [4]	0.707
5.5	11	11	11	15	15	–	25	1	1	**LC2D25●●** [4]	0.787
7.5	15	15	15	18.5	18.5	–	32	1	1	**LC2D32●●** [4]	0.797
9	18.5	18.5	18.5	18.5	18.5	–	38	1	1	**LC2D38●●** [4]	0.807
11	18.5	22	22	22	30	–	40	1	1	**LC2D40A●●** [5]	1.870
15	22	25	30	30	33	–	50	1	1	**LC2D50A●●** [5]	1.880
18.5	30	37	37	37	37	–	65	1	1	**LC2D65A●●** [5]	1.890
22	37	45	45	55	45	–	80	1	1	**LC2D80●●**	3.200
25	45	45	45	55	45	–	95	1	1	**LC2D95●●**	3.200
With mechanical interlock and electrical interlocking, for connection by screw clamp terminals or connectors											
30	55	59	59	75	80	65	115	1	1	**LC2D115●●**	6.350
40	75	80	80	90	100	75	150	1	1	**LC2D150●●**	6.400

Connection by lugs or bars

For reversing contactors LC2 D09 to LC2 D38, LC2 D115 and LC2 D150, in the references selected above, insert a figure **6** before the voltage code. Example: **LC2 D09●●** becomes **LC2 D096●●**.
To build a 40 to 65 A reversing contactor, for connection by lugs, order 2 contactors **LC1 D●●A6** and mechanical interlock **LAD 4CM** (see page B8/23).

Component parts

Auxiliary contact blocks and add-on modules: see pages B8/15 to B8/21.

*(1) LC2 D09 to D65A: clip-on mounting on 35 mm ⊔ rail **AM1 DP** or screw fixing.*
*LC2 D80 and D95: clip-on mounting on 35 mm ⊔ rail **AM1 DP** or 75 mm ⊔ rail **AM1 DL** or screw fixing.*
*LC2 D115 and D150: clip-on mounting on 35 mm ⊔ rail **AM1 DP** or screw fixing.*

(2) Standard control circuit voltages (for other voltages between 16 and 690 V, please consult your Regional Sales Office):

a.c. supply													
Volts	**24**	**42**	**48**	**110**	**115**	**220**	**230**	**240**	**380**	**400**	**415**	**440**	**500**
LC2 D09…D150 (D115 and D150 coils with integral suppression device fitted as standard))													
50/60 Hz	B7	D7	E7	F7	FE7	M7	P7	U7	Q7	V7	N7	R7	S7
LC2 D80…D115													
50 Hz	B5	D5	E5	F5	FE5	M5	P5	U5	Q5	V5	N5	R5	S5
60 Hz	B6	–	E6	F6	–	M6	–	U6	Q6	–	–	R6	–

d.c.supply											
Volts	**12**	**24**	**36**	**48**	**60**	**72**	**110**	**125**	**220**	**250**	**440**
LC2 D09…D65A (coils with integral suppression device fitted as standard)											
U 0.75…1.25 Uc	JD	BD	CD	ED	ND	SD	FD	GD	MD	UD	RD

Low consumption								
Volts ⎓	**5**	**12**	**20**	**24**	**48**	**110**	**220**	**250**
LC2 D09...D38 (coils with integral suppression device fitted as standard)								
U 0.8…1.25 Uc	AL	JL	ZL	BL	EL	FL	ML	UL

For other voltages between 5 and 690 V, see pages B8/25 to B8/28.

*(3) The weights indicated are for contactors with a.c. control circuit. For d.c. or low consumption control circuit, add 0.330 kg for **LC2 D09** to **D38**, 0.150 kg for **LC1 D40A** to **D65A**.*

*(4) For reversing contactors with electrical interlocking pre-wired at the factory, add suffix **V** to the references selected above. Example: **LC2 D09P7** becomes **LC2 D09P7V**.*

*(5) For low consumption kit **LA4 DBL** (see page B8/19).*

***Note:** when assembling a reversing contactor, it is good practice to incorporate a 50 ms time delay.*

TeSys contactors

TeSys D, 3-pole reversing contactors for motor control up to 15 kW at 400 V, in category AC-3 Horizontally mounted, pre-assembled

DF5261174R.eps



LC2 D123●●

3-pole reversing contactors, for connection by spring terminals

Pre-wired power connections.
Mechanical interlock without electrical interlocking.

Standard power ratings of 3-phase motors 50-60 Hz in category AC-3 (θ ≤ 60 °C)						Rated operational current in AC-3 440 V up to	Instantaneous auxiliary contacts per contactor		Contactors supplied with coil Basic reference, to be completed by adding the voltage code [2]	Weight [3]
220 V 230 V	380 V 400 V	415 V	440 V	500 V	660 V 690 V				Fixing [1]	
kW	kW	kW	kW	kW	kW	A				kg
For connection by spring terminals										
2.2	4	4	4	5.5	5.5	9	1	1	**LC2D093●●**	0.687
3	5.5	5.5	5.5	7.5	7.5	12	1	1	**LC2D123●●**	0.697
4	7.5	9	9	10	10	18	1	1	**LC2D183●●**	0.707
5.5	11	11	11	15	15	25	1	1	**LC2D253●●**	0.787
7.5	15	15	15	18.5	18.5	32 [4]	1	1	**LC2D323●●**	0.797
Power connection by EverLink®, BTR screw connectors [5] and control by spring terminals										
11	18.5	22	22	22	30	40	1	1	**LC2D40A3●●** [6]	1.870
15	22	25	30	30	33	50	1	1	**LC2D50A3●●** [6]	1.880
18.5	30	37	37	37	37	65	1	1	**LC2D65A3●●** [6]	1.890
For connection by Faston connectors										

All power connections are to be made by the customer.
These contactors are fitted with Faston connectors: 2 x 6.35 mm on the power poles and 1 x 6.35 mm on the coil terminals.
For reversing contactors LC2 D09 and LC2 D12 only, in the references selected above, replace the figure **3** before the voltage code with a figure **9**.
Example: **LC2 D093●●** becomes **LC2 D099●●**.

Component parts

Auxiliary contact blocks and add-on modules: see pages B8/15 to B8/21.

*(1) LC2 D09 to D32: clip-on mounting on 35 mm ⊔ rail **AM1 DP** or screw fixing.*
(2) Standard control circuit voltages (for other voltages, please consult your Regional Sales Office):

a.c. supply													
Volts	**24**	**42**	**48**	**110**	**115**	**220**	**230**	**240**	**380**	**400**	**415**	**440**	**500**
LC2 D09…D65A													
50/60 Hz	B7	D7	E7	F7	FE7	M7	P7	U7	Q7	V7	N7	R7	S7
d.c. supply													
Volts	**12**	**24**	**36**	**48**	**60**	**72**	**110**	**125**	**220**	**250**	**440**		
LC2 D09…D65A (coils with integral suppression device fitted as standard)													
U 0.75…1.25 Uc	JD	BD	CD	ED	ND	SD	FD	GD	MD	UD	RD		
Low consumption													
Volts ⎓	**5**	**12**	**20**	**24**	**48**	**110**	**220**	**250**					
LC2 D09...D38 (coils with integral suppression device fitted as standard)													
U 0.8…1.25 Uc	AL	JL	ZL	BL	EL	FL	ML	UL					

For other voltages between 5 and 690 V, see pages B8/25 to B8/28.
*(3) The weights indicated are for reversing contactors with a.c. control circuit. For d.c. or low consumption control circuit, add 0.330 kg for **LC2 D09** to **D38**, 0.150 kg for **LC1 D40A** to **D65A**.*
*(4) Must be wired with 2 x 4 mm² cables in parallel on the upstream side. On the downstream side, outgoing terminal block **LAD 331** may be used (Quickfit technology, see page B1/18).When wired with a single cable, the product is limited to 25 A (11 kW/400 V motors).*
*(5) BTR screws: hexagon socket head. In accordance with local electrical wiring regulations, a size 4 insulated Allen key must be used (reference **LAD ALLEN4**, see page B8/21).*
*(6) For low consumption kit **LA4 DBL** (see page B8/19).*

TeSys contactors

TeSys D, 4-pole changeover contactor pairs for control in category AC-1, 20 to 200 A

TeSys D

PF526178R.eps



LC2 DT20●●

Pre-assembled. Pre-wired power connections

For connection by screw clamp terminals or connectors

LC2 DT20 to LC2 DT40: mechanical interlock without electrical interlocking.
LC2 D80004: order separately 2 auxiliary contact blocks LAD N●1 to obtain electrical interlocking between the 2 contactors (see page B8/15).
For electrical interlocking incorporated in the mechanical interlock, please consult your Regional Sales Office.
LC2 D115004: mechanical interlock with integral, pre-wired electrical interlocking.

Utilisation category AC-1 Non-inductive loads Maximum rated operational current ($\theta \leq 60$ °C)	Instantaneous auxiliary contacts per contactor		Contactors supplied with coil Basic reference, to be completed by adding the voltage code (1) Fixing (2)	Weight
A				kg
20	1	1	**LC2DT20●●**	0.730
25	1	1	**LC2DT25●●**	0.730
32	1	1	**LC2DT32●●**	0.850
40	1	1	**LC2DT40●●**	0.850
125	–	–	**LC2D80004●●**	3.200
200	–	–	**LC2D115004●●**	7.400
For connection by lugs or bars				
20	1	1	**LC2DT206●●**	0.730
25	1	1	**LC2DT256●●**	0.730
32	1	1	**LC2DT326●●**	0.850
40	1	1	**LC2DT406●●**	0.850

For customer assembly

For connection by screw clamp terminals or connectors

60	1	1	**LC1DT60A●●** (3)	–
80	1	1	**LC1DT80A●●** (3)	–
For connection by lugs or bars				
60	1	1	**LC1DT60A6●●** (3)	–
80	1	1	**LC1DT80A6●●** (3)	–

Auxiliary contact blocks and add-on modules: see pages B8/15 to B8/21.

Note: when assembling changeover contactor pairs, it is good practice to incorporate a 50 ms time delay.

(1) See note (1) on next page.

*(2) **LC2 DT20** to **LC2 DT80**: clip-on mounting on 35 mm ⊔ rail **AM1 DP** or screw fixing.*
***LC2 D80:** clip-on mounting on 35 mm ⊔ rail **AM1 DP** or 75 mm ⊔ rail **AM1 DL** or screw fixing.*
***LC2 D115**: clip-on mounting on 2 x 35 mm ⊔ rails **AM1 DP** or screw fixing.*

*(3) For these operational currents, order 2 identical contactors and a mechanical interlock **LAD 4CM** (see page B8/23).*

Contactors

TeSys contactors

TeSys D, 4-pole changeover contactor pairs for control in category AC-1, 20 A

Pre-assembled. Pre-wired power connections

For connection by spring terminals.

Utilisation category AC-1 Non-inductive loads Maximum rated operational current ($\theta \leq 60$ °C)	Instantaneous auxiliary contacts per contactor		Contactors supplied with coil Basic reference, to be completed by adding the control voltage code (1) Fixing (2)
A			
20	1	1	**LC2DT203●●**

For customer assembly

Power connection by EverLink®, BTR screw connectors (3) and control by spring terminals

60	1	1	**LC1DT60A3●●** (4)
80	1	1	**LC1DT80A3●●** (4)

Separate components

Auxiliary contact blocks and add-on modules: see pages B8/15 to B8/21.

(1) Standard control circuit voltages (for other voltages, please consult your Regional Sales Office):

a.c. supply

Volts	**24**	**42**	**48**	**110**	**115**	**220**	**230**	**240**	**380**	**400**	**415**	**440**	**500**
LC2 DT20…DT40, LC1 DT60…DT80													
50/60 Hz	B7	D7	E7	F7	FE7	M7	P7	U7	Q7	V7	N7	R7	–
LC2 D80004…D115004													
50 Hz	B5	D5	E5	F5	FE5	M5	P5	U5	Q5	V5	N5	R5	S5
60 Hz	B6	–	E6	F6	–	M6	–	U6	Q6	–	–	R6	–

d.c. supply

Volts	**12**	**24**	**36**	**48**	**60**	**72**	**110**	**125**	**220**	**250**	**440**
LC2 DT20…DT40, LC1 DT60…DT80 (coils with integral suppression device fitted as standard)											
U 0.7…1.25 Uc	JD	BD	CD	ED	ND	SD	FD	GD	MD	UD	RD

Low consumption

Volts ⎓	**5**	**12**	**20**	**24**	**48**	**110**	**220**	**250**
LC2 DT20...DT40 (coils with integral suppression device fitted as standard)								
U 0.8…1.25 Uc	AL	JL	ZL	BL	EL	FL	ML	UL

For other voltages between 5 and 690 V, see pages B8/25 to B8/28.

*(2) Clip-on mounting on 35 mm ⊥⊏ rail **AM1 DP** or screw fixing.*

*(3) BTR screws: hexagon socket head. In accordance with local electrical wiring regulations, a size 4 insulated Allen key must be used (reference **LAD ALLEN4**, see page B8/21).*

*(4) For these operational currents, order 2 identical contactors and a mechanical interlock **LAD 4CM** (see page B8/23).*

TeSys contactors

For switching 3-phase capacitor banks, used for power factor correction

Direct connection without choke inductors

PB114163R.eps



LC1 DFK●●

PB114165R.eps



LC1 DGK●●, LC1 DLK●●, LC1 DMK●●

PB115168.eps

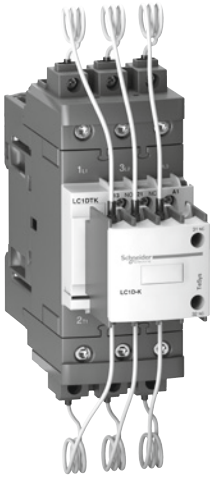

LC1 DPK●●, LC1 DTK●●

PB115169.eps

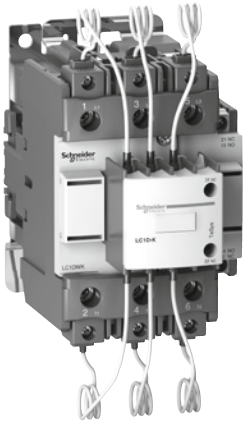

LC1 DWK12●●

Special contactors

Special contactors **LC1 D●K** are designed for switching 3-phase, single or multiple-step capacitor banks (up to 6 steps). Over 6 steps, it is recommanded to use chokes in order to limit the inrush current and thus improve the lifetime of the installation. The contactors are conform to standards IEC 60070 and 60831, UL and CSA.

Contactor applications

Specification

Contactors fitted with a block of early make poles and damping resistors, limiting the value of the current on closing to 60 In max.
This current limitation increases the life of all the components of the installation, in particular that of the fuses and capacitors.

Operating conditions

Short-circuit protection must be provided by gl type fuses rated at 1.7…2 In.
It will ensure the service continuity of the whole installation in case of a capacitor contactor end of life

Maximum operational power

The power values given in the selection table below are for the following operating conditions:

Prospective peak current at switch-on	LC1 D●K		200 In
Maximum operating rate	LC1 DFK, DGK, DLK, DMK		240 operating cycles/hour
	LC1 DPK, DTK, DWK		100 operating cycles/hour
Electrical durability at nominal load	All contactor ratings	400 V	300 000 operating cycles
		690 V	200 000 operating cycles

Operational power at 50/60 Hz (1) θ ≤ 60 °C (2)				Instantaneous auxiliary contacts		Tightening torque on cable end	Basic reference, to be completed by adding the voltage code (3)	Weight
230 V	400 V 415 V	440 V	690 V					
kVAR	kVAR	kVAR	kVAR	N/O	N/C	N.m		kg
7	12.5	12.5	21	1	2	1.7	**LC1DFK●●**	0.430
9.5	16.7	16.7	28.5	1	2	2.5	**LC1DGK●●**	0.450
11	20	21	33	1	2	2.5	**LC1DLK●●**	0.600
14	25	27	42	1	2	2.5	**LC1DMK●●**	0.630
17	30	32	50	1	2	5	**LC1DPK●●**	1.300
22	40	43	67	1	2	5	**LC1DTK●●**	1.300
35	63	67	104	1	2	9	**LC1DWK12●●**	1.650

Switching of multiple-step capacitor banks (with equal or different power ratings)

The correct contactor for each step is selected from the above table, according to the power rating of the step to be switched.
Example: 50 kVAR 3-step capacitor bank. Temperature: 50 °C and U = 400 V or 440 V.
One 25 kVAR step: contactor LC1 DMK, one 15 kVAR step: contactor LC1 DGK,
and one 10 kVAR step: contactor LC1 DFK.

(1) Operational power of the contactor according to the scheme on the page opposite.
(2) The average temperature over a 24-hour period, in accordance with standards IEC 60070 and 60831 is 45 °C.
(3) Standard control circuit voltages (the delivery time is variable, please consult your Regional Sales Office):

Volts	24	48	110	120	220	230	240	380	400	415	440
50/60 Hz	B7	E7	F7	G7	M7	P7	U7	Q7	V7	N7	R7

Dimensions, schemes:
page B8/77

DB127250.eps

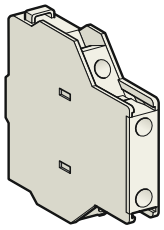

LAD 8N

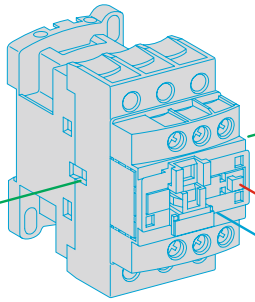

LC1 D●●

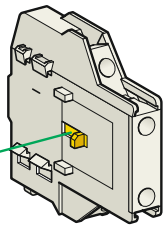

LAD 8N

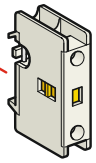

LAD N10, N01

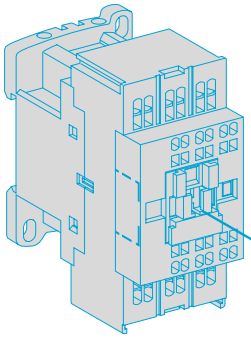

LC1 D●●3

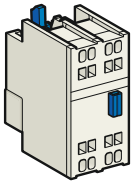

LAD N●●3

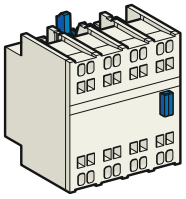

LAD N●●3
LAD C●●3

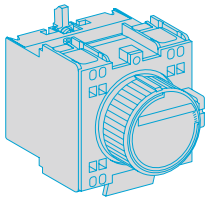

LAD T●3
LAD S23

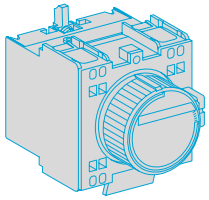

LAD R●3

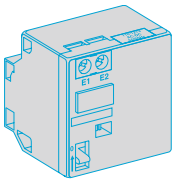

LA6 DK
or
LAD 6K

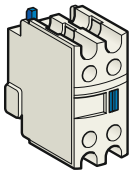

LAD N

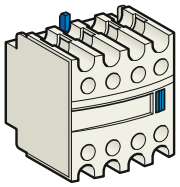

LAD N
LAD C

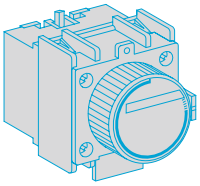

LAD T
LAD S2

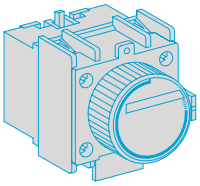

LAD R

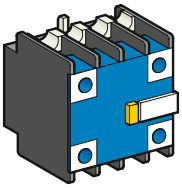

LA1 DX, DY, DZ

See page opposite for mounting possibilities
according to the contactor type

TeSys contactors

TeSys D contactors and reversing contactors

Instantaneous auxiliary contact blocks

Instantaneous auxiliary contact blocks for connection by screw clamp terminals

For use in normal operating environments

In order to mount an LAD 8N on an LC1 D80 to D95, a set of shims must be ordered separately, see page B8/21.

Clip-on mounting (1)	Number of contacts per block	Composition					Reference	
Front	1	–	–	–	1	–	**LADN10**	
		–	–	–	–	1	**LADN01**	
	2	–	–	–	1	1	**LADN11**	
		–	–	–	2	–	**LADN20**	
		–	–	–	–	2	**LADN02**	
	4	–	–	–	2	2	**LADN22**	**LADN22S** (4)
		–	–	–	1	3	**LADN13**	
		–	–	–	4	–	**LADN40**	
		–	–	–	–	4	**LADN04**	
		–	–	–	3	1	**LADN31**	
	4 incl. 1 N/O & 1 N/C make before break	–	–	–	2	2	**LADC22**	
Side (contact blocks compatible with AC coil contactors only)	2	–	–	–	1	1	**LAD8N11**	
		–	–	–	2	–	**LAD8N20**	
		–	–	–	–	2	**LAD8N02**	
For terminal referencing conforming to EN 50012								
Front on 3P contactors and 4P contactors 20 to 80 A	2	–	–	–	1	1	**LADN11G**	
	4	–	–	–	2	2	**LADN22G**	
Front on 4P contactors 125 to 200 A	2	–	–	–	1	1	**LADN11P**	
	4	–	–	–	2	2	**LADN22P**	
With dust and damp protected contacts, for use in particularly harsh industrial environments								
Front	2	–	2	–	–	–	**LA1DX20**	
		1	1	–	–	–	**LA1DX11**	
		2	–	–	–	–	**LA1DX02**	
		–	2	2	–	–	**LA1DY20** (2)	
	4	–	2	–	2	–	**LA1DZ40**	
		–	2	–	1	1	**LA1DZ31**	

Instantaneous auxiliary contact blocks for connection by lugs

This type of connection is not possible for blocks with 1 contact or blocks with dust and damp protected contacts. For all other instantaneous auxiliary contact blocks, add the figure **6** to the end of the references selected above. Example: **LAD N11** becomes **LAD N116**.

Instantaneous auxiliary contact blocks for connection by spring terminals

This type of connection is not possible for LAD 8, LAD N with 1 contact or blocks with dust and damp protected contacts. For all other contact blocks, add the figure **3** to the end of the references selected above.
Example: **LAD N11** becomes **LAD N113**.

Instantaneous auxiliary contact blocks for connection by Faston connectors

This type of connection is not possible for LAD 8, LAD N with 1 contact or blocks with dust and damp protected contacts. For all other contact blocks, add the figure **9** to the end of the references selected above.
Example: **LAD N11** becomes **LAD N119**.

(1) Maximum number of auxiliary contacts that can be fitted:

Contactors			Instantaneous auxiliary contacts					Time delay Front mounted
Type	Number of poles and size		Side mounted		Front mounted			
					1 contact	2 contacts	4 contacts	
~	3P	LC1 D09…D38	1 on LH side	and	–	1	or 1	or 1
		LC1 D40A…D65A	1 on LH or 1 on RH side	and	–	1	or 1	or 1
		LC1 D80 and D95 (50/60 Hz)	1 on each side	or	2	and 1	or 1	or 1
		LC1 D80 and D95 (50 or 60 Hz)	1 on each side	and	2	and 1	or 1	or 1
		LC1 D115 and D150	1 on LH side	and	–	1	or 1	or 1
	4P	LC1 DT20…DT40	1 on LH side	and	–	1	or 1	or 1
		LC1 DT60A and DT80A	1 on LH or 1 on RH side	and	–	1	or 1	or 1
		LC1 D40008, D65008 and D80	1 on each side	or	1	or 1	or 1	or 1
		LC1 D115	1 on each side	and	1	or 1	or 1	or 1
⎓	3P	LC1 D09…D38	–		–	1	or 1	or 1
		LC1 D40A…D65A	–		–	1	or 1	or 1
		LC1 D80 and D95	–		1	or 1	or 1	or 1
		LC1 D115 and D150	1 on LH side	and	–	1	or 1	or 1
	4P	LC1 DT20…DT40	–		–	1	or 1	or 1
		LC1 DT60A and DT80A	–		–	1	or 1	or 1
		LC1 D40008, D65008 and D80	–		2	and 1	or 1	or 1
		LC1 D115	1 on each side		–	and 1	or 1	or 1
LC (3) (5)	3P	LC1 D09…D38	–		–	1	–	–
	4P	LC1 DT20…DT40	–		–	1	–	–

(2) Device fitted with 4 earth screen continuity terminals.
(3) LC: low consumption.
(4) With red front face - for safety chain indication.
(5) LA1D●●● dust & damp proof auxiliary contact blocks not allowed.

TeSys contactors

TeSys D contactors and reversing contactors

Time delay auxiliary contact blocks
Mechanical latch blocks

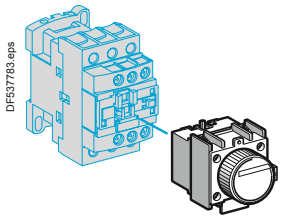

LAD T●

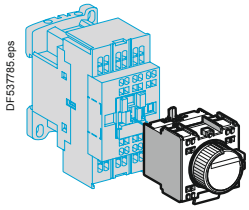

LAD T●3

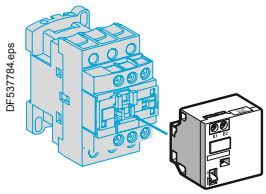

LAD 6K10●

Time delay auxiliary contact blocks for connection by screw clamp terminals

Maximum number of auxiliary contact blocks that can be fitted per contactor, see page B8/15.
Sealing cover to be ordered separately, see page B8/21.
LAD T0 and LAD R0: with extended scale from 0.1 to 0.6 s.
LAD S2: with switching time of 40 ms ± 15 ms between opening of the N/C contact and closing of the N/O contact.

Clip-on mounting	Number of contacts	Time delay		Reference
		Type	Setting range	
Front	1 N/O + 1 N/C	On-delay	0.1…3 s	**LADT0**
			0.1…30 s	**LADT2**
			10…180 s	**LADT4**
			1…30 s	**LADS2**
		Off-delay	0.1…3 s	**LADR0**
			0.1…30 s	**LADR2**
			10…180 s	**LADR4**

Time delay auxiliary contact blocks for connection by lugs

Add the figure **6** to the end of the references selected above. Example: **LAD T0** becomes **LAD T06**.

Time delay auxiliary contact blocks for connection by spring terminals

Add the figure **3** to the end of the references selected above. Example: **LAD T0** becomes **LAD T03.**

Time delay auxiliary contact blocks for connection by Faston connectors

Add the figure **9** to the end of the references selected above. Example: **LAD T0** becomes **LAD T09**.

Mechanical latch blocks (1)

Clip-on mounting	Unlatching control	For use on contactor	Basic reference, to be completed by adding the control voltage code (2)
Front	Manual or electric	LC1 D09…D38 (∿ or ⎓) (3) LC1 DT20…DT40 (∿ or ⎓)	**LAD6K10●**
		LC1 D40A…D65A (3 P ∿ or ⎓) LC1 DT60A and DT80A (4 P ∿ or ⎓)	**LAD6K10●**
		LC1 D80…D150 (3 P ∿) LC1 D80 and D115 (3 P ⎓) LC1 D80 (4 P ∿) LC1 D80 and D115 (4 P ∿) LP1 D80 and LC1 D115 (4 P ⎓)	**LA6DK20●**

(1) The mechanical latch block must not be powered up at the same time as the contactor. The duration of the control signal for the mechanical latch block and the contactor should be:
⩾ 100 ms for a contactor operating on an a.c. supply,
⩾ 250 ms for a contactor operating on a d.c. supply.
Maximum impulse duration for the LAD 6K10● mechanical latch block: 10 seconds.

(2) Standard control circuit voltages (for other voltages, please consult your Regional Sales Office):

Volts 50/60 Hz, ⎓	24	32/36	42/48	60/72	100	110/127	220/240	256/277	380/415
Code	B	C	E	EN	K	F	M	U	Q

(3) The DC, low consumption contactors (coil code ●L) are not compatible with the mechanical latch blocks LAD6K10●.

TeSys contactors

TeSys D contactors and reversing contactors

Suppressor modules

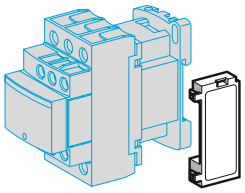

LAD 4●●

RC circuits (Resistor-Capacitor)

Effective protection for circuits highly sensitive to "high frequency" interference. For use only in cases where the voltage is virtually sinusoidal. i.e. less than 5 % total harmonic distortion. Voltage limited to 3 Uc max. and oscillating frequency limited to 400 Hz max. Slight increase in drop-out time (1.2 to 2 times the normal time).

Mounting	For use with contactor (1)			Reference
	Rating	Type		
		V ∿	V ⎓	
Clip-on side mounting (3) (5)	D09…D38 (3P) DT20…DT40	24…48	–	**LAD4RCE**
		50…127	–	**LAD4RCG**
		110…250	–	**LAD4RCU**
Clip-on front mounting (3) (5)	D40A…D65A (3P) DT60A…DT80A (4P)	24…48	–	**LAD4RC3E**
		50…127	–	**LAD4RC3G**
		110…240	–	**LAD4RC3U**
		380…415	–	**LAD4RC3N**
Screw fixing (4)	D80…D150 (3P) D40…D115 (4P)	24…48	–	**LA4DA2E**
		50…127	–	**LA4DA2G**
		110…240	–	**LA4DA2U**
		380…415	–	**LA4DA2N**

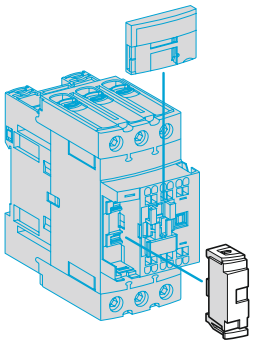

LAD 4RC3●, LAD 4V3●, LAD 4D3U, LAD 4T3●

Varistors (peak limiting)

Protection provided by limiting the transient voltage to 2 Uc max. Maximum reduction of transient voltage peaks. Slight increase in drop-out time (1.1 to 1.5 times the normal time).

Clip-on side mounting (3) (5)	D09…D38 (3P) DT20…DT40	24…48	–	**LAD4VE**
		50…127	–	**LAD4VG**
		110…250	–	**LAD4VU**
Clip-on front mounting (3) (5)	D40A…D65A (3P) DT60A…DT80A (4P)	24…48	24…48	**LAD4V3E**
		50…127	50…127	**LAD4V3G**
		110…250	110…250	**LAD4V3U**
Screw fixing (4)	D80…D115 (3P) D80…D115 (4P)	24…48	–	**LA4DE2E**
		50…127	–	**LA4DE2G**
		110…250	–	**LA4DE2U**
	D80…D95 (3P) D80 (4P)	–	24…48	**LA4DE3E**
		–	50…127	**LA4DE3G**
		–	110…250	**LA4DE3U**

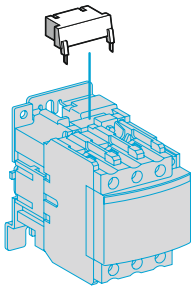

LA4 D●●

Flywheel diodes

No overvoltage or oscillating frequency. Increase in drop-out time (6 to 10 times the normal time). Polarised component.

Clip-on side mounting (5)	D09…D38 (3P), DT20…DT40	–	5...600	**LAD4DDL**
Clip-on front mounting (5)	D40A…D65A (3P), DT60A…DT80A (4P)	–	24…250	**LAD4D3U**
Screw fixing (4)	D80 and D95 (3P), D40…D80 (4P)	–	24…250	**LA4DC3U**

Bidirectional peak limiting diodes

Protection provided by limiting the transient voltage to 2 Uc max. Maximum reduction of transient voltage peaks.

Clip-on side mounting (3)	D09…D38 (3P) DT20…DT40 (4P) (2)	24	–	**LAD4TB**
		–	24	**LAD4TBDL**
		72	–	**LAD4TS**
		–	72	**LAD4TSDL**
		–	125	**LAD4TGDL**
		–	250	**LAD4TUDL**
		–	600	**LAD4TXDL**
Clip-on front mounting (3)	D40A…D65A (3P) DT60A…DT80A (4P) (2)	12…24	12…24	**LAD4T3B**
		25…72	25…72	**LAD4T3S**
		73…125	73…125	**LAD4T3G**
		126…250	126…250	**LAD4T3U**
		251…440	251…440	**LAD4T3R**
Screw fixing (4)	D80…D95 (3P) D40…D80 (4P)	12…24	–	**LA4DB2B**
		25…72	–	**LA4DB2S**
		–	24	**LA4DB3B**
		–	72	**LA4DB3S**

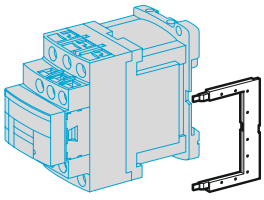

LAD 4DDL or LAD 4T●DL

(1) For satisfactory protection, a suppressor module must be fitted across the coil of each contactor.
*(2) From D09 to D65A and from LC1 DT20 to DT80A, d.c. and low consumption 3-pole contactors are fitted with a built-in bidirectional peak limiting diode suppressor as standard. This bidirectional peak limiting diode is removable and can therefore be replaced by the user. (See reference above). If a d.c. or low consumption contactor is used without suppression, the standard suppressor should be replaced with a blanking plug (reference **LAD 9DL** for LC1 D09 to D38 and LC1 DT20 to DT40; reference **LAD 9DL3** for LC1 D40A to D65A and LC1 DT60A to DT80A).*
(3) Clipping-on makes the electrical connection. The overall size of the contactor remains unchanged.
(4) Mounting at the top of the contactor on coil terminals A1 and A2.
(5) In order to install these accessories, the existing suppression device must first be removed.

DB127251.eps

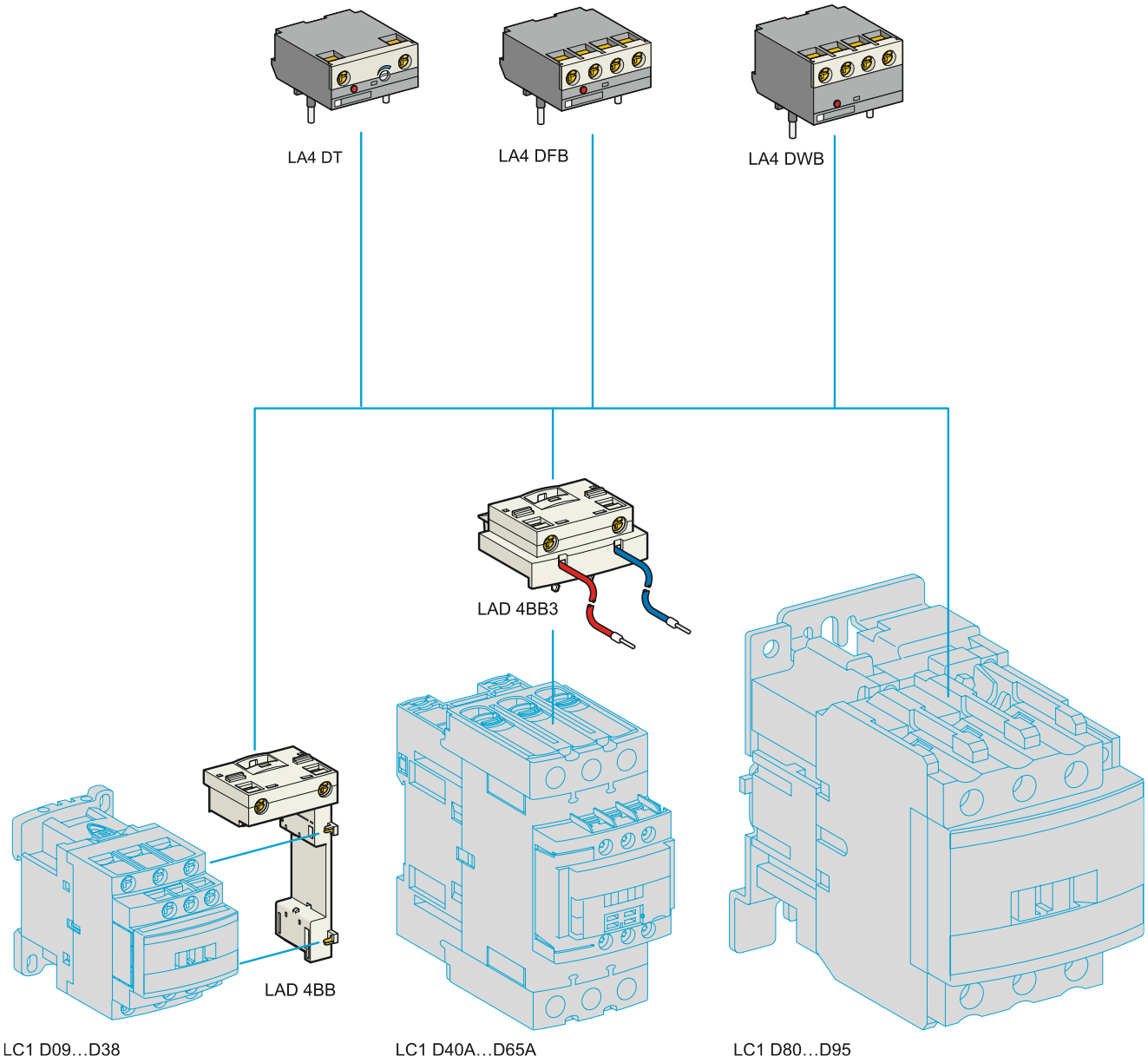

See page opposite for mounting possibilities according to the contactor type.

TeSys contactors
TeSys D contactors and reversing contactors
Accessories

Electronic serial timer modules (1)

■ 3-pole contactors LC1 D09 to D38: mounted using adapter LAD 4BB, to be ordered separately, see below.
■ 3-pole contactors LC1 D40A to D65A: mounted using adapter LAD 4BB3, to be ordered separately, see below.
■ 3-pole contactors LC1 D80 to D150 and 4-pole contactors LC1 D40 to D115: mounted directly across terminals A1 and A2 of the contactor.

On-delay type

Operational voltage ∼		Time delay	Reference
24…250 V	100…250 V		
LC1 D09…D65A (3P)	LC1 D80…D150 (3P)	0.1…2 s	**LA4DT0U**
		1.5…30 s	**LA4DT2U**
		25…500 s	**LA4DT4U**

Interface modules

■ 3-pole contactors LC1 D09 to D38: mounted using adapter LAD 4BB, to be ordered separately, see below.
■ 3-pole contactors LC1 D40A to D65A: mounted using adapter LAD4 BB3, to be ordered separately, see below.

Relay interface

Operational voltage ∼	Supply voltage E1-E2 (⎓)	Reference
24…250 V		
LC1 D09…D150 (3P)	24 V	**LA4DFB**

Relay interface with "AUTO-I" manual override switch (output forced “ON”), solid state type

Operational voltage ∼		Supply voltage E1-E2 (⎓)	Reference
24…250 V	100…250 V		
LC1 D09…D65A (3P)	LC1 D80…D115 (3P)	24 V	**LA4DWB**

Adapter kit for low control signal

For use on contactors	Composition	Reference
LC1 D40A…D65A (3P) (2)	■ 1 LAD4BB3 coil wiring adapter ■ 1 LA4DFB relay interface module	**LA4DBL**

Wiring adapters for coil retrofit of 3 pole contactors

For adapting existing wiring to a new product

For use on contactors			Reference
LC1 D09…D38	Without coil suppression		**LAD4BB**
	With coil suppression	∼ 24…48 V	**LAD4BBVE**
		∼ 50…127 V	**LAD4BBVG**
		∼ 110…250 V	**LAD4BBVU**
LC1 D40A…65A	Without coil suppression		**LAD4BB3**

(1) For 24 V operation, the contactor must be fitted with a 21 V coil (code Z).
See pages B8/25 to B8/28.
(2) The kit is compatible with a coil voltage of ∼ 24 V to ∼ 250 V (B7 to U7) and ⎓ 24 V to ⎓ 250 V (BD to UD).

Contactors

Characteristics: pages B8/64 to B8/66
Dimensions: pages B8/67 to B8/70
Schemes: pages B8/71 and B8/72

TeSys contactors

TeSys D contactors and reversing contactors

Accessories

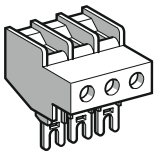

LA9 D3260

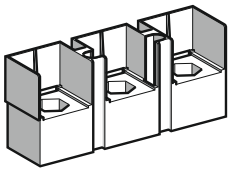

LA9 D11550●

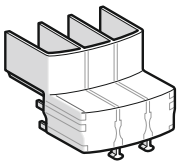

LAD 96570

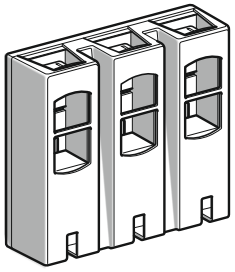

LA9 D11560●

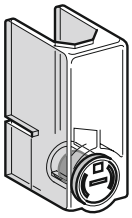

LA9 D11570●

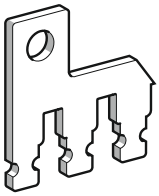

LA9 D80962

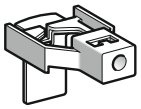

LA9 D11567

Accessories for main pole and control connections

Description		For use with contactors LC1 ~	For use with contactors LC1 ⎓	Sold in lots of	Unit reference
Connectors for cable, size (1 connector)	4-pole 10 mm²	DT20, DT25	DT20, DT25	1	**LAD92560**
	3-pole 25 mm²	D09…D38	D09…D38	1	**LA9D3260**
EverLink® terminal block	3-pole	D40A…D65A	D40A…D65A	1	**LAD96560**
Connectors for cables (2 connectors)	3-pole 120 mm²	D115, D150	D115, D150	1	**LA9D115603**
	4-pole 120 mm²	D115	D115	1	**LA9D115604**
Connectors for lug type terminals (2 connectors)	3-pole	D1156, D1506	D1156, D1506	1	**LA9D115503**
	4-pole	D1156	D1156	1	**LA9D115504**
Protective covers for connectors for lug type terminals	3-pole	D40A6…D65A6	D40A6…D65A6	1	**LAD96570**
		D1156, D1506	D1156, D1506	1	**LA9D115703** (1)
	4-pole	D60A6…D80A6	D60A6…D80A6	1	**LAD96580**
		D1156, D1506	D1156, D1506	1	**LA9D115704**
IP 20 covers for lug type terminals (for mounting with circuit breakers GV3 P●●6 and GV3 L●●6)	3 poles	D40A6…D65A6	D40A6…D65A6	1	**LAD96575**
Links for parallel connection of	2 poles	D09…D38	D09…D38	10	**LA9D2561**
		DT20, DT25 (4P)	DT20, DT25 (4P)	10	**LA9D1261**
		DT32, DT40 (4P)	DT32, DT40 (4P)	10	**LAD96061**
		D40A…D65A	D40A…D65A	1	**LAD9P32**
		D80, D95	D80	2	**LA9D80961**
	3 poles	D09…D38	D09…D38	10	**LAD9P3** (2)
		D40A…D65A	D40A…D65A	1	**LAD9P33**
		D80, D95	D80, D95	1	**LA9D80962**
	4 poles	DT20, DT25	DT20, DT25	2	**LA9D1263**
		D80, D95	D80	2	**LA9D80963**
Staggered coil connection		–	D80	10	**LA9D09966**
Control circuit take-off from main pole		D80, D95	D80, D95	10	**LA9D8067**
		D115, D150	D115, D150	10	**LA9D11567**
Spreaders for increasing the pole pitch to 45 mm		D115, D150	D115, D150	3	**GV7AC03**

(1) For 3-pole contactors: 1 set of 6 covers, for 4-pole contactors: 1 set of 8 covers.
(2) Separate connecting bar for connecting 2 poles in parallel.

Dimensions:
pages B8/67 to B8/70

Schemes:
pages B8/71 and B8/72

TeSys contactors

TeSys D contactors and reversing contactors

Accessories

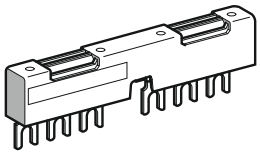

GV2 G245

Sets of contacts and arc chambers

Description	For contactor		Reference
Sets of contacts	3-pole	LC1 D115	**LA5D1158031**
		LC1 D150	**LA5D150803**
	4-pole	LC1 D115004	**LA5D115804**
Arc chambers	3-pole	LC1 D115	**LA5D11550**
		LC1 D150	**LA5D15050**
	4-pole	LC1 D115004	**LA5D115450**

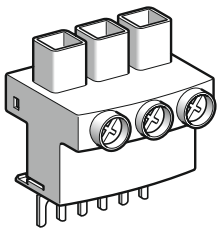

GV1 G09

Power connection accessories

Terminal block	For supply to one or more GV2 G busbar sets	**GV1G09**
Set of 63 A busbars for parallelling of contactors	2 contactors LC1 D09…D18 or D25…D38	**GV2G245**
	4 contactors LC1 D09…D18 or D25…D38	**GV2G445**
Set of 115 A busbars for parallelling of contactors	2 contactors LC1 D40A…D65A	**GV3G264**
	3 contactors LC1 D40A…D65A	**GV3G364** (1)
Set of S-shape busbars	For circuit breakers GV3 P●● and GV3 L●● and contactors LC1 D40A…D65A	**GV3S**

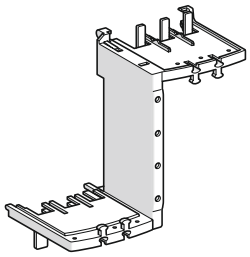

GV3 S

Protection accessories

Description	Use	Sold in lots of	Reference
Miniature control circuit fuse holder	5 x 20 with 4 A-250 V fuse	1	**LA9D941**
Sealing cover	For LAD T, LAD R	1	**LA9D901**
Safety cover preventing access to the moving contact carrier	LC1 D09…D65A and DT20…DT80A	1	**LAD9ET1**
	Red cover (for safety chain indication)	1	**LAD9ET1S**
	LC1 D80 and D95	1	**LAD9ET3**
	Red cover (for safety chain indication)	1	**LAD9ET3S**
	LC1 D115 and D150	1	**LAD9ET4**
	Red cover (for safety chain indication)	1	**LAD9ET4S**

Marking accessories

Description	Use	Sold in lots of	Unit reference
Sheet of 64 blank legends, self-adhesive, 8 x 33 mm (2)	Contactors (except 4P) LC1 D80…D115, LAD N (4 contacts), LA6 DK	10	**LAD21**
Sheet of 112 blank legends, self-adhesive, 8 x 12 mm (2)	LAD N (2 contacts), LAD T, LAD R, LRD	10	**LAD22**
Sheet of 64 blank legends for marking using plotter or 8 x 33 mm engraver	Contactors (except 4P) LC1 D80…D115, LAD (4 contacts), LA6 DK	10	**LAD23**
Sheet of 440 blank legends for marking using plotter or 8 x 12 mm engraver	All products	35	**LAD24**
Marker holder snap-in, 8 x 22 mm	4-pole contactors, LC1 D80...D115, LA6 DK	100	**LA9D92**
Marker holder snap-in, 8 x 18 mm	LC1 D09...D65A, LC1 DT20...DT80A, LAD N (4 contacts), LAD T, LAD R	100	**LAD90**
Bag of 300 blank legends self-adhesive, 7 x 21 mm	On holder LA9 D92	1	**LA9D93**
"SIS Label" labelling software supplied on CD-Rom	Multi-language version: English, French, German, Italian, Spanish	1	**XBY2U**

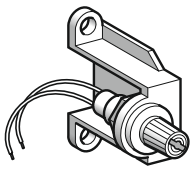

LA9 D941

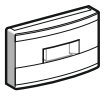

LAD 9ET●

Mounting accessories

Retrofit plate for screw fixing	For replacement of LC1 D40 to D65 with LC1 D40A to D65A	1	**LAD7X3**
Mounting plate	For replacement of LC1 F115 or F150 with LC1 D115 or D150	1	**LA9D730**
Set of shims	For fitting side mounting blocks LAD 8N on LC1 D80 and D95	1	**LA9D511**
Size 4 Allen key, insulated, 1000 V	For use on contactors LC1 D40A to LC1 D150	5	**LADALLEN4**

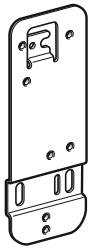

LAD 7X3

(1) With this set of busbars, any one contactor can be supplied directly by its EverLink® double cage power terminal block. The other two contactors are supplied by the busbar set. The 115 A limitation is therefore applied to these two contactors. Example: 1 LC1 D65A supplied directly + 1 contactor LC1 D65A and 1 contactor LC1 D50 A supplied via the busbar set = 115 A. This combination is compatible with busbar set GV3 G364.

(2) These legends are for sticking onto the safety cover of the contactors or add-on block, if fitted.

TeSys contactors

Capacitive delayed opening devices

For TeSys D contactors



LAZ R90F



LAZ R91F

References

These devices prevent inadvertent opening of a contactor in the event of a brief volt drop or momentary supply failure.

Control circuit: d.c. supply

For use with contactor		Corresponding delayed opening device		
Type [1]	**Contactor reference to be completed** [2]	**Supply voltage 50/60 Hz**	**Non-adjustable delay time (Tr)**	**Reference**
		V	**s**	
LC1 D09, LC1 D12, LC1 D18, LC1 D25, LC1 D32 or LC1 D38	**LC1 D●●PD**	110…115	1.5…5	**LAZR90F**
	LC1 D●●QD	120…127	2.5…5	**LAZR90F**
	LC1 D●●TD	220	4…8	**LAZR90M**
	LC1 D●●VD	240	5…10	**LAZR90M**
	LC1 D●●WD	380	4…8	**LAZR90Q**
	LC1 D●●XD	415…440	5.5…13	**LAZR90Q**
LC1 D40, LC1 D50 or LC1 D65	**LC1 D●●PD**	110…115	0.5…1	**LAZR90F**
	LC1 D●●QD	120…127	0.5…1.5	**LAZR90F**
	LC1 D●●TD	220…240	1…2.5	**LAZR90M**
	LC1 D●●WD	380	1…2.5	**LAZR90Q**
	LC1 D●●XD	415…440	1…3	**LAZR90Q**
LC1 D80	**LC1 D●●PD**	110…120	0.4…1	**LAZR90F**
	LC1 D●●QD	120…127	0.5…1	**LAZR90F**
	LC1 D●●TD	220	0.5…2	**LAZR90M**
	LC1 D●●VD	240	1…2.5	**LAZR90M**
	LC1 D●●WD	380	1…2	**LAZR90Q**
	LC1 D●●XD	415…440	1…2.5	**LAZR90Q**

Add-on blocks for delayed opening devices

Application	For use with delayed opening device	Operational voltage	Non-adjustable delay time	Reference
		V	**s**	
To double the delay time	LAZ R90F	110…127	Tr x 2	**LAZR91F**
	LAZ R90M	220…240	Tr x 2	**LAZR91M**
	LAZ R90Q	380…440	Tr x 2	**LAZR91Q**

(1) These contactors can be supplied as standard for this application or can be adapted by replacing the coil (except for contactors LC1 D09●●●● to LC1 D38●●●● on which the coil is not replaceable).

(2) Reference to be completed: see page B8/2.

Dimensions

LAZ R9●●

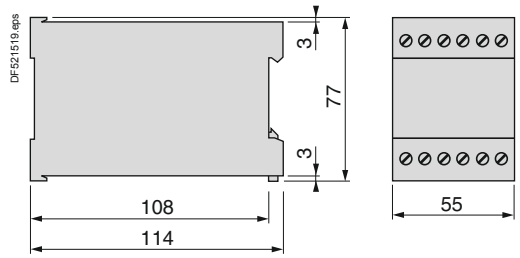

Schemes

LAZ R9●● + LC1 D

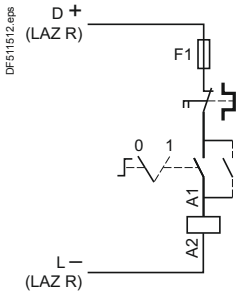

Other versions

Delayed opening devices for use with other types of contactor. Please consult your Regional Sales Office.

TeSys contactors

Component parts for assembling reversing contactors for motor control, low-speed/high-speed starters and star-delta starters

DF537729.eps

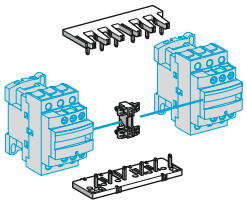

LAD 9R1

DF537730.eps

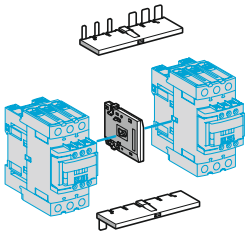

LAD 9R3

DF537731.eps

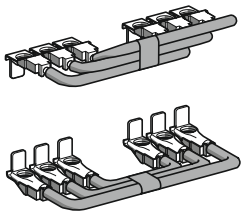

LA9 D8069

For 3-pole reversing contactors for motor control

Contactors with screw clamp terminals or connectors. Horizontally mounted, assembled by customer.

Description	For contactors [1] (2 identical contactors)	Reference
Kits for assembly of reversing contactors		
Kit comprising: ■ a mechanical interlock **LAD 9V2** with electrical interlocking **LAD 9V1** ■ a set of power connections LAD 9V5 (parallel) and **LAD 9V6** (reversing).	LC1 D09 to D38	**LAD9R1V**
Kit comprising: ■ a mechanical interlock **LAD 9V2** without electrical interlocking ■ a set of power connections **LAD 9V5** (parallel) and **LAD 9V6** (reversing).	LC1 D09 to D38	**LAD9R1**
Kit comprising: ■ a mechanical interlock **LAD 4CM** ■ a set of power connections **LA9 D65A69**.	LC1 D40A to D65A	**LAD9R3**
Mechanical interlocks		
Mechanical interlock with integral electrical interlocking	LC1 D80 and D95 (~)	**LA9D4002**
	LC1 D80 and D95 (⎓)	**LA9D8002**
	LC1 D115 and D150	**LA9D11502**
Mechanical interlock without integral electrical interlocking	LC1 D09 to D38	**LAD9V2**
	LC1 D40A to D65A	**LAD4CM**
	LC1 D80 and D95 (~)	**LA9D50978**
	LC1 D80 and D95 (⎓)	**LA9D80978**
Sets of power connections		
Comprising: ■ a set of parallel bars ■ a set of reverser bars.	LC1 D09 to D38 with screw clamp terminals or connectors	**LAD9V5** + **LAD9V6**
	LC1 D09…D32 with spring terminal connections	**LAD9V12** + **LAD9V13** [2]
	LC1 D40A to D65A	**LA9D65A69**
	LC1 D80 and D95 (~)	**LA9D8069**
	LC1 D80 and D95 (⎓)	**LA9D8069**
	LC1 D115 and D150	**LA9D11569**

For low-speed/high-speed starter

Description	For contactors with connection type	Reference
Connection kit enabling reversing of low and high speed directions using a reversing contactor and a 2N/O + 2N/C main pole contactor	Screw clamps or connectors	**LAD9PVGV**

For star-delta starter

Description	For contactors	Reference
Mounting kit comprising: ■ 1 time delay contact block **LAD S2** (**LC1 D09…D80**), ■ power circuit connections (**LC1 D09…D80**), ■ hardware required for fixing the contactors onto the mounting plate (**LC1 D80**).	LC1 D09 and D12	**LAD91217**
	LC1 D18 to D32	**LAD93217**
	LC1 D40A and D50A	**LAD9SD3**
	LC1 D80	**LA9D8017**
Equipment mounting plates	LC1 D09, D12 and D18	**LA9D12974**
	LC1 D32	**LA9D32974**
	LC1 D40A and D50A	**–**
	LC1 D80	**LA9D80973**

(1) To order the 2 contactors: see pages B8/3 and B8/9.

(2) To assemble a reversing contactor with spring terminal connections, the following components must be ordered:
*- 1 mechanical interlock **LAD 9V2**,*
- 1 upstream power connection kit and 1 downstream power connection kit.
*Upstream power connection kit **LAD 9V10**: installed in the Quickfit system with power connection module **LAD 34**.*
*(If module **LAD 34** is not used, replace **LAD 9V10** with **LAD 9V12**).*
*Downstream power connection kit **LAD 9V11**: installed in the Quickfit system with outgoing terminal block **LAD 331**.*
*(If **LAD 331** is not used, replace **LAD 9V11** with **LAD 9V13**).*

TeSys contactors
Component parts for assembling changeover contactor pairs

TeSys D

DF537733.eps

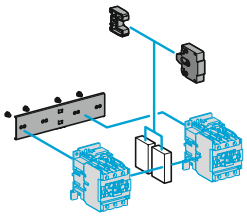

LA9 D50978

For 4-pole changeover contactor pairs (3-phase distribution + neutral)

Contactors with screw clamp terminals or connectors. Horizontally mounted, assembled by customer.

Description	For contactors [1] (2 identical contactors)	Reference
Kits for assembly of changeover contactor pairs		
Kit comprising: ■ a mechanical interlock LAD 9V2 with electrical interlocking LAD 9V1, ■ a set of power connections (changeover) LAD 9V7.	LC1 DT20 to DT40 with screw clamps or connectors	**LADT9R1V**
Kit comprising: ■ a mechanical interlock LAD 9V2 without electrical interlocking, ■ a set of power connections (changeover) LAD 9V7.	LC1 DT20 to DT40 with screw clamps or connectors	**LADT9R1**
Mechanical interlocks		
With integral electrical interlocking	LC1 D80004	**LA9D4002**
	LP1 D80004	**LA9D8002**
	LC1 D115004	**LA9D11502**
Without integral electrical interlocking	LC1 DT20 to DT40 with screw clamps or connectors	**LAD9V2** [2]
	LC1 DT203 to DT403 with spring terminals	**LAD9V2** [2]
	LC1 DT60A and DT80A	**LAD4CM**
	LC1 D80004	**LA9D50978**
	LP1 D80004	**LA9D80978**
Sets of power connections		
Comprising a set of parallel bars	LC1 D80004	**LA9D8070**
	LP1 D80004	**LA9D8070**
	LC1 D115004	**LA9D11570**
	LC1 DT203 to DT403 with spring terminals	**LAD9V9**
	LC1 D80004	**LA9D8070** [2]
	LP1 D80004	**LA9D8070** [2]

DF537735.eps

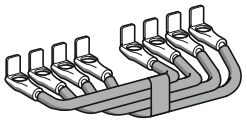

LA9 D8070

For 3-pole changeover contactor pairs

Contactors with screw clamp terminals or connectors. Horizontally mounted, assembled by customer.

Description	For contactors [1] (2 identical contactors)	Reference
Mechanical interlocks		
Without integral electrical interlocking	LC1 D40A…D65A	**LAD9R3S**
With integral electrical interlocking	LC1 D115 and D150	**LA9D11502**
Sets of power connections		
Comprising a set of parallel bars	LC1 D115 and D150	**LA9D11571**

(1) To order the 2 contactors: see pages B8/3 and B8/9.
*(2) Order 2 contact blocks **LAD N●1** to build the electrical interlock, see page B8/15.*

TeSys contactors

a.c. coils for TeSys D, 3 or 4-pole contactors

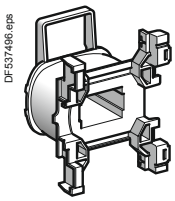

LXD 1●●

For ∿ contactors LC1 D09...D38 and LC1 DT20…DT40

Specifications

Average consumption at 20 °C:
- inrush (cos φ = 0.75) 70 VA,
- sealed (cos φ = 0.3) 50 Hz: 7 VA, 60 Hz: 7.5 VA.

Operating range (θ ≤ 60 °C): 50 Hz: 0.8…1.1 Uc, 60 Hz: 0.85…1.1 Uc.

Control circuit voltage Uc	Average resistance at 20 °C ±10 %	Inductance of closed circuit	Reference [1]
V	Ω	H	
			50/60 Hz
12	1.33	0.05	**LXD1J7**
21 [2]	4.17	0.17	**LXD1Z7**
24	5.37	0.22	**LXD1B7**
32	10.1	0.39	**LXD1C7**
36	12.8	0.49	**LXD1CC7**
42	17	0.67	**LXD1D7**
48	21.7	0.87	**LXD1E7**
60	34.6	1.4	**LXD1EE7**
100	100.4	3.8	**LXD1K7**
110	124.1	4.6	**LXD1F7**
115	129.8	5	**LXD1FE7**
120	150.6	5.4	**LXD1G7**
127	158.5	6.1	**LXD1FC7**
200	410.7	15	**LXD1L7**
208	430.4	16	**LXD1LE7**
220	515.4	18	**LXD1M7** [3]
230	538.6	20	**LXD1P7**
240	562.3	22	**LXD1U7**
277	800.7	29	**LXD1W7**
380	1551	55	**LXD1Q7** [4]
400	1633	60	**LXD1V7**
415	1694	65	**LXD1N7**
440	1993	73	**LXD1R7**
480	2398	87	**LXD1T7**
500	2499	95	**LXD1S7**
575	3294	125	**LXD1SC7**
600	3810	136	**LXD1X7**
660	4656	165	**LXD1YC7**
690	5020	180	**LXD1Y7**

(1) The last 2 digits in the reference represent the voltage code.
(2) Voltage for special coils fitted in contactors with serial timer modules, with 24 V supply.
*(3) Suitable for use on **230 V** / 50 Hz. In this case, apply a coefficient of 0.6 to the mechanical durability of the contactor (see page B8/56 and B8/66).*
*(4) Suitable for use on **400 V** / 50 Hz. In this case, apply a coefficient of 0.6 to the mechanical durability of the contactor (see page B8/56 and B8/66).*

TeSys contactors

a.c. coils for TeSys D, 3 or 4-pole contactors

DF503984.eps

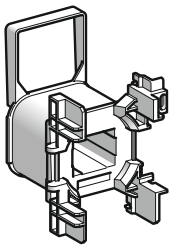

LXD 3●●

For ∼ contactors LC1 D40A…D65A, LC1 DT60A and LC1 DT80A

Specifications

Average consumption at 20 °C:
- inrush (cos φ = 0.75) 160 VA,
- sealed (cos φ = 0.3) 50 Hz: 15 VA, 60 Hz: 15 VA.

Operating range (θ ≤ 60 °C): 50 Hz: 0.8…1.1 Uc, 60 Hz: 0.85…1.1 Uc.

Control circuit voltage Uc	Average resistance at 20 °C ±10%	Inductance of closed circuit	Reference (1)
V	Ω	H	
			50/60 Hz
12	0.49	0.03	**LXD3J5** (2)
24	1.98	0.12	**LXD3B7**
32	3.76	0.22	**LXD3C7**
42	6.18	0.37	**LXD3D7**
48	7.97	0.48	**LXD3E7**
100	37.63	2.07	**LXD3K7**
110	42.28	2.50	**LXD3F7**
115	48.76	2.74	**LXD3FE7**
120	37.63	2.07	**LXD3G7**
127	60.29	3.34	**LXD3FC7**
200	149	8.27	**LXD3L7**
208	105	6.22	**LXD3LE7**
220	182	10	**LXD3M7** (3)
230	192	10.9	**LXD3P7**
240	202	11.9	**LXD3U7**
277	193	11	**LXD3W7**
380	512	29.9	**LXD3Q7** (4)
400	607	33.1	**LXD3V7**
415	635	35.6	**LXD3N7**
440	682	40.1	**LXD3R7**
480	607	33.1	**LXD3T7**
500	878	51.7	**LXD3S7**
575	1238	68.4	**LXD3SC7**
600	1304	74.5	**LXD3X7**
660	1593	90.1	**LXD3YC7**
690	1683	98.5	**LXD3Y7**

(1) The last 2 digits in the reference represent the voltage code.
(2) This coil can only be used on 50 Hz.
*(3) Suitable for use on **230 V** / 50 Hz. In this case, apply a coefficient of 0.6 to the mechanical durability of the contactor (see page B8/56 and B8/66).*
*(4) Suitable for use on **400 V** / 50 Hz. In this case, apply a coefficient of 0.6 to the mechanical durability of the contactor (see page B8/56 and B8/66).*

TeSys contactors

a.c. coils for TeSys D, 3 or 4-pole contactors

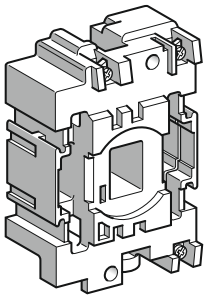

LX1 D6●●

For 3 or 4-pole contactors LC1D40, D50, D65, D80, D95

Specifications

Average consumption at 20 °C:
- inrush (cos φ = 0.75) 50 Hz: 200 VA, 60 Hz: 220 VA
- sealed (cos φ = 0.3) 50 Hz: 20 VA, 60 Hz: 22 VA.

Operating range (θ ≤ 55 °C): 0.85…1.1 Uc.

Control circuit voltage Uc	Average resistance at 20°C ±10 %	Inductance of closed circuit	Reference (1)	Average resistance at 20 °C ±10 %	Inductance of closed circuit	Reference (1)
V	Ω	H		Ω	H	
			50 Hz			60 Hz
24	1.4	0.09	**LX1D6B5**	1.05	0.06	**LX1D6B6**
32	2.6	0.16	**LX1D6C5**	–	–	–
42	4.4	0.27	**LX1D6D5**	–	–	–
48	5.5	0.35	**LX1D6E5**	4.2	0.23	**LX1D6E6**
110	31	1.9	**LX1D6F5**	22	1.2	**LX1D6F6**
115	31	1.9	**LX1D6FE5**	–	–	–
120	–	–	–	28	1.5	**LX1D6G6**
127	41	2.4	**LX1D6G5**	–	–	–
208	–	–	–	86	4.3	**LX1D6L6**
220	–	–	–	98	4.8	**LX1D6M6**
220/230	127	7.5	**LX1D6M5**	–	–	–
230	133	8.1	**LX1D6P5**	–	–	–
240	152	8.7	**LX1D6U5**	120	5.7	**LX1D6U6**
256	166	10	**LX1D6W5**	–	–	–
277	–	–	–	157	8	**LX1D6W6**
380	–	–	–	300	14	**LX1D6Q6**
380/400	381	22	**LX1D6Q5**	–	–	–
400	411	25	**LX1D6V5**	–	–	–
415	463	26	**LX1D6N5**	–	–	–
440	513	30	**LX1D6R5**	392	19	**LX1D6R6**
480	–	–	–	480	23	**LX1D6T6**
500	668	38	**LX1D6S5**	–	–	–
575	–	–	–	675	33	**LX1D6S6**
600	–	–	–	775	36	**LX1D6X6**
660	1220	67	**LX1D6Y5**	–	–	–

Specifications

Average consumption at 20 °C:
- inrush (cos φ = 0.75) 50/60 Hz: 245 VA at 50 Hz
- sealed (cos φ = 0.3) 50/60 Hz: 26 VA at 50 Hz.

Operating range (θ ≤ 55 °C): 0.85…1.1 Uc.

						50/60 Hz
24	–	–	–	1.22	0.08	**LX1D6B7**
42	–	–	–	3.5	0.25	**LX1D6D7**
48	–	–	–	5	0.32	**LX1D6E7**
110	–	–	–	26	1.7	**LX1D6F7**
115	–	–	–	–	–	**LX1D6FE7**
120	–	–	–	32	2	**LX1D6G7**
220/230 (2)	–	–	–	102	6.7	**LX1D6M7**
230	–	–	–	115	7.7	**LX1D6P7**
230/240 (3)	–	–	–	131	8.3	**LX1D6U7**
380/400 (4)	–	–	–	310	20	**LX1D6Q7**
400	–	–	–	349	23	**LX1D6V7**
415	–	–	–	390	24	**LX1D6N7**
440	–	–	–	410	27	**LX1D6R7**

(1) The last 2 digits in the reference represent the voltage code.
*(2) For use on **230 V** / 50 Hz, apply a coefficient of 0.6 to the mechanical durability of the contactor, see page B8/56 and B8/66. This coil can be used on 240 V at 60 Hz.*
(3) This coil can be used on 220/240 V at 50 Hz and on 240 V only at 60 Hz.
*(4) For use on **400 V** / 50 Hz, apply a coefficient of 0.6 to the mechanical durability of the contactor, see page B8/56 and B8/66.*

TeSys contactors

a.c. coils for TeSys D, 3 or 4-pole contactors

DF537502.eps

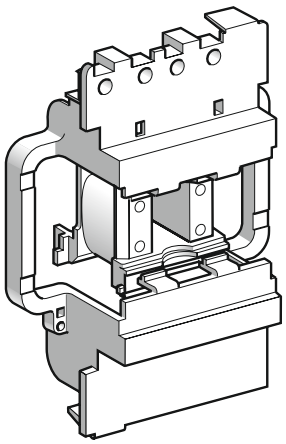

LX1 D8●●

For 3 or 4-pole contactors LC1 D115

Specifications

Average consumption at 20 °C:
- inrush (cos φ = 0.8) 50 or 60 Hz: 300 VA
- sealed (cos φ = 0.3) 50 or 60 Hz: 22 VA.

Operating range (θ ≤ 55 °C): 0.85…1.1 Uc.

Control circuit voltage Uc	Average resistance at 20 °C ±10 %	Inductance of closed circuit	Reference (1)	Average resistance at 20 °C ±10 %	Inductance of closed circuit	Reference (1)
V	Ω	H		Ω	H	
			50 Hz			60 Hz
24	1.24	0.09	**LX1D8B5**	0.87	0.07	**LX1D8B6**
32	2.14	0.17	**LX1D8C5**	–	–	–
42	3.91	0.28	**LX1D8D5**	–	–	–
48	4.51	0.36	**LX1D8E5**	3.91	0.28	**LX1D8E6**
110	26.53	2.00	**LX1D8F5**	19.97	1.45	**LX1D8F6**
115	26.53	2.00	**LX1D8FE5**	–	–	–
120	–	–	–	24.02	1.70	**LX1D8G6**
127	32.75	2.44	**LX1D8FC5**	–	–	–
208	–	–	–	67.92	5.06	**LX1D8L6**
220	104.77	7.65	**LX1D8M5**	79.61	5.69	**LX1D8M6**
230	104.77	8.29	**LX1D8P5**	–	–	–
240	125.25	8.89	**LX1D8U5**	97.04	6.75	**LX1D8U6**
277	–	–	–	125.75	8.89	**LX1D8W6**
380	338.51	22.26	**LX1D8Q5**	243.07	17.04	**LX1D8Q6**
400	368.43	25.55	**LX1D8V5**	–	–	–
415	368.43	27.65	**LX1D8N5**	–	–	–
440	441.56	30.34	**LX1D8R5**	338.51	22.26	**LX1D8R6**
480	–	–	–	368.43	25.55	**LX1D8T6**
500	566.62	38.12	**LX1D8S5**	–	–	–

For 3 or 4-pole contactors LC1 D115, LC1 D150

Specifications

Average consumption at 20 °C:
- inrush: cos φ = 0.9 - 280 to 350 VA
- sealed: cos φ = 0.9 - 2 to 18 VA.

Operating range (θ ≤ 55 °C): 0.8…1.15 Uc.

Coils with integral suppression device fitted as standard, class B.

Control circuit voltage Uc	Average resistance at 20 °C ±10 %	Inductance of closed circuit	Reference (1)	Average resistance at 20 °C ±10 %	Inductance of closed circuit	Reference (1)
V	Ω	H		Ω	H	
						50/60 Hz
24	–	–	–	147	3.03	**LX1D8B7**
32	–	–	–	301	8.28	**LX1D8C7**
42	–	–	–	498	13.32	**LX1D8D7**
48	–	–	–	1061	24.19	**LX1D8E7**
110	–	–	–	4377	109.69	**LX1D8F7**
115	–	–	–	4377	109.69	**LX1D8FE7**
120	–	–	–	4377	109.69	**LX1D8G7**
127	–	–	–	6586	152.65	**LX1D8FC7**
208	–	–	–	10 895	260.15	**LX1D8LE7**
220	–	–	–	9895	210.72	**LX1D8M7**
230	–	–	–	9895	210.72	**LX1D8P7**
240	–	–	–	9895	210.72	**LX1D8U7**
277	–	–	–	21 988	533.17	**LX1D8UE7**
380	–	–	–	21 011	482.42	**LX1D8Q7**
400	–	–	–	21 011	482.42	**LX1D8V7**
415	–	–	–	21 011	482.42	**LX1D8N7**
440	–	–	–	21 501	507.47	**LX1D8R7**
480	–	–	–	32 249	938.41	**LX1D8T7**
500	–	–	–	32 249	938.41	**LX1D8S7**

(1) The last 2 digits in the reference represent the voltage code.

TeSys contactors
d.c. coils for TeSys D, 3 or 4-pole contactors

537503

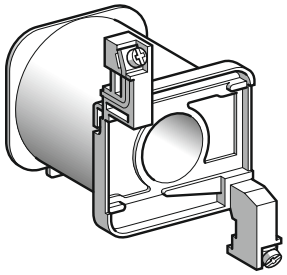

LX4 D7●D

For 3-pole contactors LC1 D80 or 4-pole contactors LP1 D80

Specifications

Average consumption: 22 W.
Operating range: 0.85…1.1 Uc.

Control circuit voltage Uc	Average resistance at 20 °C ± 10%	Inductance of closed circuit	Reference (1)	Weight
V	Ω	H		kg
12	6.6	0.46	**LX4 D7JD**	0.680
24	27	1.89	**LX4 D7BD**	0.680
36	57	4	**LX4 D7CD**	0.680
48	107	7.5	**LX4 D7ED**	0.680
60	170	11.9	**LX4 D7ND**	0.680
72	230	16.1	**LX4 D7SD**	0.680
110	564	39.5	**LX4 D7FD**	0.680
125	718	50.3	**LX4 D7GD**	0.680
220	2215	155	**LX4 D7MD**	0.680
250	2850	200	**LX4 D7UD**	0.680
440	9195	640	**LX4 D7RD**	0.680

(1) The last 2 digits in the reference represent the voltage code.

TeSys contactors

d.c. coils for TeSys D, 3 or 4-pole contactors

537504

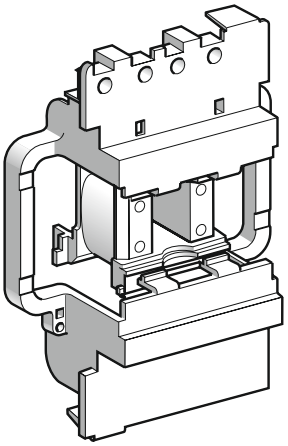

LX4 D8●D

For contactors LC1 D115, D150

Specifications

Consumption: inrush 270 to 365 W, sealed 2.4 to 5.1 W.
Operating range: 0.75…1.2 Uc.
Coils with integral suppression device fitted as standard, class B.

Control circuit voltage Uc	Average resistance at 20 °C ± 10 %	Inductance of closed circuit	Reference (1)	Weight
V	Ω	H		kg
24	147	3.03	**LX4 D8BD**	0.300
48	1061	24.19	**LX4 D8ED**	0.300
60	1673	38.44	**LX4 D8ND**	0.300
72	2500	56.27	**LX4 D8SD**	0.300
110	4377	109.69	**LX4 D8FD**	0.300
125	6586	152.65	**LX4 D8GD**	0.300
220	9895	210.72	**LX4 D8MD**	0.300
250	18 022	345.40	**LX4 D8UD**	0.300
440	21 501	684.66	**LX4 D8RD**	0.300

For 3-pole contactors LC1 D80 or 4-pole contactors LP1 D80

Specifications

Wide range coils for specific applications
Average consumption: 23 W.
Operating range: 0.75 to 1.2 Uc.
Coils with "TH" treatment as standard.

Control circuit voltage Uc	Average resistance at 20 °C ± 10 %	Inductance of closed circuit	Reference (1)	Weight
V	Ω	H		kg
12	6.2	0.49	**LX4 D7JW**	0.680
24	23.5	1.75	**LX4 D7BW**	0.680
36	51.9	4.18	**LX4 D7CW**	0.680
48	94.2	7	**LX4 D7EW**	0.680
72	204	15.7	**LX4 D7SW**	0.680
110	483	36	**LX4 D7FW**	0.680
220	1922	144	**LX4 D7MW**	0.680

(1) The last 2 digits in the reference represent the voltage code.

TeSys contactors
Mini-contactors TeSys LC1 SK and LP1 SK

TeSys SK

PF511131R.eps



LC1 SK06

- Width of contactor 27 mm.
- Mounting on 35 mm ⎓ rail.
- Screw clamp terminals.

Mini-contactors for motor in category AC-3

Standard power ratings of 3-phase motors 50/60 Hz in category AC-3 (1)			Rated operational voltage in AC-3 up to 400 V	Number of poles	Instantaneous auxiliary contacts		Basic reference. Complete with code indicating control circuit voltage (2)
220 V 230 V	380 V 415 V	660 V 690 V					
kW	kW	kW	A				
1.1	2.2	2.2	6	2	–	–	**LC1SK0600●●**

Mini-contactors for motor in category AC-1

Non inductive loads maximum current (θ ≤ 55 °C) utilisation category AC-1	Control circuit supply	Number of poles	Instantaneous auxiliary contacts		Basic reference. Complete with code indicating control circuit voltage (2)
A					
12	a.c.	2	–	–	**LC1SK0600●●**
	d.c.	2	–	–	**LP1SK0600●●**

PF511132R.eps



LA1 SK10

Add-on block with 1 power pole (for 3-phase circuits)

For use on contactor	Number of poles	Instantaneous auxiliary contacts		Reference
LC1 SK06 clip-on front mounting	1	1	–	**LA1SK10**
	1	–	1	**LA1SK01**

Note: *Auxiliary contact blocks and coil suppressor module, see next page.*

(1) For use in AC-3 category and 3-phase circuits, an LA1 SK●● auxiliary contact block should be ordered separately for mounting on the contactor.

(2) Standard control circuit voltages (variable delivery times, please consult your Regional Sales Office):

Mini-contactors LC1 SK									
Volts ∿ 50/60 Hz	**24**	**48**	**110**	**120**	**220**	**230**	**240**	**380**	**400**
Code	B7	E7	F7	G7	M7	P7	U7	Q7	V7

Mini-contactors LP1 SK					
Volts ⎓	**12**	**24**	**36**	**48**	**72**
Code	JD	BD	CD	ED	SD

Characteristics: pages B8/78 to B8/81
Dimensions, schemes: page B8/82

TeSys contactors

Mini-contactors TeSys LC1 SK and LP1 SK

Instantaneous auxiliary contacts and coil suppressor modules

PF511133R.eps



LA1 SK11

PF511134R.eps



LA4 SK●1●

Instantaneous auxiliary contact blocks

Clip-on front mounting

For use on contactor	Maximum number of blocks per contactor	Composition		Reference
LC1 SK06	1	2	–	**LA1SK20**
		–	2	**LA1SK02**
		1	1	**LA1SK11**

Coil suppressor modules

Clip-on fixing and electrical connection on right-hand side, without use of tools

For use on contactors	Type	For voltages	Sold in lots of	Unit reference
LC1 SK06 and LP1 SK06	Varistor (1)	∿ and ⎓ 24 V…48 V	10	**LA4SKE1E**
		∿ and ⎓ 110 V…250 V	10	**LA4SKE1U**
	Diode (2)	⎓ 24 V…250 V	10	**LA4SKC1U**

(1) Protection provided by limiting the transient voltage to 2 Uc max. Maximum reduction of transient voltage peaks. Slight increase in drop-out time (1.1 to 1.5 times the normal time).
(2) No overvoltage or oscillating frequency. Slight increase in drop-out time (1.1 to 1.5 times the normal time).

Characteristics: pages B8/78 to B8/81
Dimensions, schemes: page B8/82

TeSys contactors

Contactors for motor control, 6 to 16 A in category AC-3 and 6 to 12 A in category AC-4

Control circuit: a.c.



LC1 K0910●●



LC1 K09103●●



LC1 K09107●●



LC1 K09105●●



LC7 K0910●●

Contactor selection according to utilisation category, see pages A6/23 to A6/27 and A6/30 to A6/33.
Mounting on 35 mm ⎓ rail or Ø4 screw fixing.
Screws in the open "ready-to-tighten" position.
Add-on auxiliary contact blocks and accessories, see pages B8/42 to B8/45.

3-pole contactors for standard applications

Standard power ratings of 3-phase motors 50-60 Hz in category AC-3			Rated operational current in category AC-3 440 V up to	Instantaneous auxiliary contacts		Basic reference, to be completed by adding the voltage code (1) (2)
220 V 230 V	380 V 415 V	440/500 V 660/690 V				
kW	kW	kW	A			
Screw clamp connections						
1.5	2.2	3	**6**	1	-	**LC1K0610●●**
				-	1	**LC1K0601●●**
2.2	4	4	**9**	1	-	**LC1K0910●●**
				-	1	**LC1K0901●●**
3	5.5	4 (> 440)	**12**	1	-	**LC1K1210●●**
		5.5 (440)		-	1	**LC1K1201●●**
4	7.5	4 (> 440)	**16**	1	-	**LC1K1610●●**
		5.5 (440)		-	1	**LC1K1601●●**

Spring terminal connections

For 6 to 12 A ratings only, in the references selected above, insert a figure **3** before the voltage code.
Example: **LC1 K0610●●** becomes **LC1 K06103●●.**

Faston connectors, 1 x 6.35 or 2 x 2.8

For 6 to 16 A ratings, in the references selected above, insert a figure **7** before the voltage code.
Example: **LC1 K0610●●** becomes **LC1 K06107●●**.

Solder pins for printed circuit boards

For 6 to 16 A ratings, in the references selected above, insert a figure **5** before the voltage code.
Example: **LC1 K0610●●** becomes **LC1 K06105●●**.

3-pole silent contactors

Recommended for use in areas sensitive to noise, high interference mains supplies, etc.
Coil with rectifier incorporated, suppressor fitted as standard.

Screw clamp connections						
1.5	2.2	3	**6**	1	-	**LC7K0610●●**
				-	1	**LC7K0601●●**
2.2	4	4	**9**	1	-	**LC7K0910●●**
				-	1	**LC7K0901●●**
3	5.5	4 (> 440)	**12**	1	-	**LC7K1210●●**
		5.5 (440)		-	1	**LC7K1201●●**

Faston connectors, 1 x 6.35 or 2 x 2.8

In the references selected above, insert a figure **7** before the voltage code.
Example: **LC7 K0610●●** becomes **LC7 K06107●●**.

Solder pins for printed circuit boards

In the references selected above, insert a figure **5** before the voltage code.
Example: **LC7 K0610●●** becomes **LC7 K06105●●**.

(1) Standard control circuit voltages (for other voltages, please consult your Regional Sales Office):

a.c. supply

Contactors LC1 K (0.8…1.15 Uc) *(0.85…1.1 Uc)*

Volts	**12**	**20**	**24** (2)	**36**	**42**	**48**	**110**	**115**	**120**	**127**	**200/208**		***220/230***	***230***	***230/240***
50/60 Hz	J7	Z7	B7	C7	D7	E7	F7	FE7	G7	FC7	L7		*M7*	*P7*	*U7*
Volts	**256**	**277**	***380/400***		**400**	***400/415***	**440**	**480**	**500**	**575**	**600**	**660/690**			
50/60 Hz	W7	UE7	*Q7*	–	V7	*N7*	R7	T7	S7	SC7	X7	*Y7*	–	–	

Up to and including 240 V, coil with integral suppression device available: add **2** to the code required. Example: **J72**.

Contactors LC7 K (0.85…1.1 Uc)

Volts	**24**	**42**	**48**	**110**	**115**	**220**	**230/240**
50/60 Hz	B7	D7	E7	F7	FE7	M7	U7

(2) For mains supplies with a high level of interference (voltage surge > 800 V), use a suppressor module LA4 KE1FC (50…129 V) or LA4 KE1UG (130…250 V), see page B8/44

TeSys contactors

Contactors for motor control, 6 to 12 A in categories AC-3 and AC-4

Control circuit: d.c. or low consumption

TeSys K



LP1 K0910●●



LP1 K09103●●



LP1 K09107●●



LP1 K09105●●



LP4 K0910●●

Contactor selection according to utilisation category, see pages A6/23 to A6/27 and A6/30 to A6/33.
Mounting on 35 mm ⎓ rail or Ø4 screw fixing.
Screws in the open “ready-to-tighten” position.
Add-on auxiliary contact blocks and accessories, see pages B8/42 to B8/45.

3-pole contacts, d.c. supply

Standard power ratings of 3-phase motors 50-60 Hz in category AC-3			Rated operational current in category AC-3 440 V up to	Instantaneous auxiliary contacts		Basic reference, to be completed by adding the voltage code (1) (2)
220 V 230 V	380 V 415 V	440/500 V 660/690 V				
kW	kW	kW	A			
Screw clamp connections						
1.5	2.2	3	**6**	1	–	**LP1K0610●●**
				–	1	**LP1K0601●●**
2.2	4	4	**9**	1	–	**LP1K0910●●**
				–	1	**LP1K0901●●**
3	5.5	4 (> 440)	**12**	1	–	**LP1K1210●●**
		5.5 (440)		–	1	**LP1K1201●●**

Spring terminal connections

In the references selected above, insert a figure **3** before the voltage code.
Example: **LP1 K0610●●** becomes **LP1 K06103●●**.

Faston connectors, 1 x 6.35 or 2 x 2.8

In the references selected above, insert a figure **7** before the voltage code.
Example: **LP1 K0610●●** becomes **LP1 K06107●●**.

Solder pins for printed circuit boards

In the references selected above, insert a figure **5** before the voltage code.
Example: **LP1 K0610●●** becomes **LP1 K06105●●**.

3-pole low consumption contactors

Compatible with programmable controller outputs.
Wide range coil (0.7…1.30 Uc), suppressor fitted as standard, consumption 1.8 W.

Screw clamp connections						
1.5	2.2	3	**6**	1	–	**LP4K0610●●**
				–	1	**LP4K0601●●**
2.2	4	4	**9**	1	–	**LP4K0910●●**
				–	1	**LP4K0901●●**
3	5.5	4 (> 440)	**12**	1	–	**LP4K1210●●**
		5.5 (440)		–	1	**LP4K1201●●**

Spring terminal connections

In the references selected above, insert a figure **3** before the voltage code.
Example: **LP4 K0610●●** becomes **LP4 K06103●●**.

Faston connectors, 1 x 6.35 or 2 x 2.8

In the references selected above, insert a figure **7** before the voltage code.
Example: **LP4 K0610●●** becomes **LP4 K06107●●**.

Solder pins for printed circuit boards

In the references selected above, insert a figure **5** before the voltage code.
Example: **LP4 K0610●●** becomes **LP4 K06105●●**.

(1) Standard control circuit voltages (for other voltages, please consult your Regional Sales Office):

d.c. supply (contactors LP1 K: 0.8...1.15 Uc)

Volts	**12**	**20**	**24** (2)	**36**	**48**	**60**	**72**	**100**	**110**	**125**	**155**	**174**	**200**	**220**	**230**	**240**	**250**
Code	JD	ZD	BD	CD	ED	ND	SD	KD	FD	GD	PD	QD	LD	MD	MPD	MUD	UD

Coil with integral suppression device available: add **3** to the code required. Example: **JD3**

Low consumption (contactors LP4 K: 0.7...130 Uc)

Volts	**12**	**20**	**24**	**48**	**72**	**110**	**120**
Code	JW3	ZW3	BW3	EW3	SW3	FW3	GW3

(2) For LP1 K only, when connecting an electronic sensor or timer in series with the contactor coil, select a 20 V coil (∼ control circuit voltage code Z7, ⎓ control circuit voltage code ZD) so as to compensate for the incurred voltage drop.

Selection: pages A6/23 and A6/27
Characteristics: pages B8/83 to B8/86
Dimensions: page B8/87
Schemes: page B8/88

TeSys contactors

Contactors for control in category AC-1, 20 A Control circuit: a.c.



LC1 K09004●●



LC1 K09103●●



LC1 K09107●●



LC1 K09004●●

Contactor selection according to utilisation category, see pages A6/28 and A6/29.
Mounting on 35 mm ⎓ rail or Ø4 screw fixing.
Screws in the open "ready-to-tighten" position.
Add-on auxiliary contact blocks and accessories, see pages B8/42 to B8/45.

3 or 4-pole contactors for standard applications (1)

Non-inductive loads Category AC-1 Maximum current at θ ≤ 50 °C	Number of poles		Instantaneous auxiliary contacts		Basic reference, to be completed by adding the voltage code (2) (3)
A					
Screw clamp connections					
20	3	–	1	–	**LC1K0910●●**
					or **LC1K1210●●**
	3	–	–	1	**LC1K0901●●**
					or **LC1K1201●●**
	4	–	–	–	**LC1K09004●●**
					or **LC1K12004●●**
	2	2	–	–	**LC1K09008●●**

Spring terminal connections

In the references selected above, insert a figure **3** before the voltage code.
Example: **LC1 K0910●●** becomes **LC1 K09103●●**.

Faston connectors, 1 x 6.35 or 2 x 2.8

In the references selected above, insert a figure **7** before the voltage code.
Example: **LC1 K0910●●** becomes **LC1 K09107●●**.

Solder pins for printed circuit boards

In the references selected above, insert a figure **5** before the voltage code.
Example: **LC1 K0910●●** becomes **LC1 K09105●●**.

3 or 4-pole silent contactors (1)

Recommended for use in areas sensitive to noise, high interference mains supplies, etc.
Coil with rectifier incorporated, suppressor fitted as standard.

Screw clamp connections

20	3	–	1	–	**LC7K0910●●**
					or **LC7K1210●●**
	3	–	–	1	**LC7K0901●●**
					or **LC7K1201●●**
	4	–	–	–	**LC7K09004●●**
					or **LC7K12004●●**
	2	2	–	–	**LC7K09008●●**

Faston connectors, 1 x 6.35 or 2 x 2.8

In the references selected above, insert a figure **7** before the voltage code.
Example: **LC7 K0910●●** becomes **LC7 K09107●●**.

Solder pins for printed circuit boards

In the references selected above, insert a figure **5** before the voltage code.
Example: **LC7 K0910●●** becomes **LC7 K09105●●**.

(1) Selection between 9 and 12 A ratings according to number of operating cycles, see AC-1 curve on page A6/28.
(2) Standard control circuit voltages (for other voltages, please consult your Regional Sales Office):

a.c. supply

Contactors LC1 K (0.8…1.15 Uc) *(0.85…1.1 Uc)*

Volts	**12**	**20**	**24** (3)	**36**	**42**	**48**	**110**	**115**	**120**	**127**	**200/208**		***220/230***	**230**	***230/240***
50/60 Hz	J7	Z7	B7	C7	D7	E7	F7	FE7	G7	FC7	L7		*M7*	P7	*U7*
Volts	**256**	**277**	***380/400***		**400**	***400/415***		**440**	**480**	**500**	**575**	**600**	***660/690***		
50/60 Hz	W7	UE7	*Q7*		V7	*N7*		R7	T7	S7	SC7	X7	*Y7*		

Up to and including 240 V, coil with integral suppression device available: add **2** to the code required. Example: **J72.**

Contactors LC7 K (0.8…1.1 Uc)

Volts	**24**	**42**	**48**	**110**	**115**	**220**	**230/240**
50/60 Hz	B7	D7	E7	F7	FE7	M7	U7

(3) For mains supplies with a high level of interference (voltage surge > 800 V), use a suppressor module LA4 KE1FC (50…129 V) or LA4 KE1UG (130…250 V), see page B8/44.

TeSys contactors

Contactors for control in category AC-1, 20 A

Control circuit: d.c. or low consumption

Contactor selection according to utilisation category, see pages A6/28 and A6/29.
Mounting on 35 mm ⎓ rail or Ø4 screw fixing.
Screws in the open "ready-to-tighten" position.
Add-on auxiliary contact blocks and accessories, see pages B8/42 to B8/45.

PF511142R.eps



LC1 K09004●●

PF511143R.eps



LC1 K09103●●

PF511144R.eps



LC1 K09105●●

PF511141R.eps



LC1 K09004●●

3 and 4-pole contactors, d.c. supply (1)

Non-inductive loads Category AC-1 Maximum current at θ ≤ 50 °C	Number of poles		Instantaneous auxiliary contacts		Basic reference, to be completed by adding the voltage code (2) (3)
A					
Screw clamp connections					
20	3	–	1	–	**LP1K0910●●**
					or **LP1K1210●●**
	3	–	–	1	**LP1K0901●●**
					or **LP1K1201●●**
	4	–	–	–	**LP1K09004●●**
					or **LP1K12004●●**
	2	2	–	–	**LP1K09008●●**

Spring terminal connections

In the references selected above, insert a figure **3** before the voltage code.
Example: **LP1 K0910●●** becomes **LP1 K09103●●**.

Faston connectors, 1 x 6.35 or 2 x 2.8

In the references selected above, insert a figure **7** before the voltage code.
Example: **LP1 K0910●●** becomes **LP1 K09107●●**.

Solder pins for printed circuit boards

In the references selected above, insert a figure **5** before the voltage code.
Example: **LP1 K0910●●** becomes **LP1 K09105●●**.

3 or 4-pole low consumption contactors (1)

Compatible with programmable controller outputs.
Wide range coil (0.7…1.30 Uc), suppressor fitted as standard, consumption 1.8 W.

Screw clamp connections					
20	3	–	1	–	**LP4K0910●●●**
					or **LP4K1210●●●**
	3	–	–	1	**LP4K0901●●●**
					or **LP4K1201●●●**
	4	–	–	–	**LP4K09004●●●**
					or **LP4K12004●●●**
	2	2	–	–	**LP4K09008●●●**

Spring terminal connections

In the references selected above, insert a figure **3** before the voltage code.
Example: **LP4 K0910●●** becomes **LP4 K09103●●**.

Faston connectors, 1 x 6.35 or 2 x 2.8

In the references selected above, insert a figure **7** before the voltage code.
Example: **LP4 K0910●●** becomes **LP4 K09107●●**.

Solder pins for printed circuit boards

In the references selected above, insert a figure **5** before the voltage code.
Example: **LP4 K0910●●** becomes **LP4 K09105●●**.

(1) Selection between 9 and 12 A ratings according to number of operating cycles, see AC-1 curve on page A6/28.
(2) Standard control circuit voltages (for other voltages, please consult your Regional Sales Office):

d.c. supply (contactors LP1 K: 0.8...1.15 Uc)

Volts ⎓	12	20	24 (3)	36	48	60	72	100	110	125	155	174	200	220	230	240	250
Code	JD	ZD	BD	CD	ED	ND	SD	KD	FD	GD	PD	QD	LD	MD	MPD	MUD	UD

Coil with integral suppression device available: add **3** to the code required. Example: **JD3.**

Low consumption (contactors LP4 K: 0.7...130 Uc)

Volts ⎓	12	20	24	48	72	110	120
Code	JW3	ZW3	BW3	EW3	SW3	FW3	GW3

(3) For LP1 K only, when connecting an electronic sensor or timer in series with the contactor coil, select a 20 V coil (∿ control circuit voltage code Z7, ⎓ control circuit voltage code ZD) so as to compensate for the incurred voltage drop.

TeSys contactors

Reversing contactors for motor control, 6 to 16 A in category AC-3 and 6 to 12 A in category AC-4

Control circuit: a.c.

Reversing contactor selection according to utilisation category, see pages A6/23 to A6/27 and A6/30 to A6/33.
Integral mechanical interlock.
It is essential to link the contacts of the electrical interlock.
Pre-wired power circuit connections as standard on screw clamp versions.
Mounting on 35 mm ⎓ rail or Ø4 screw fixing. Screws in the open "ready-to-tighten" position.
Add-on auxiliary contact blocks and accessories, see pages B8/42 to B8/45.

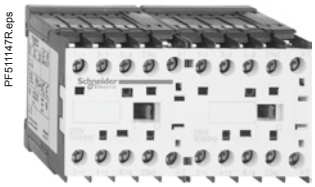
PF511147R.eps

LC2 K0910●●

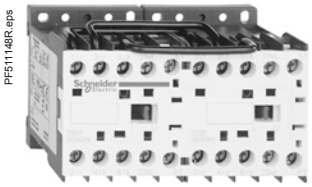
PF511148R.eps

LC2 K09105●●

3-pole reversing contactors for standard applications

Standard power ratings of 3-phase motors 50/60 Hz in category AC-3			Rated operational current in category AC-3 440 V up to	Instantaneous auxiliary contacts per contactor		Basic reference, to be completed by adding the voltage code (1) (2)
220 V 230 V	380 V 415 V	440/500 V 660/690 V				
kW	kW	kW	A			
Screw clamp connections						
1.5	2.2	3	**6**	1	–	**LC2K0610●●**
				–	1	**LC2K0601●●**
2.2	4	4	**9**	1	–	**LC2K0910●●**
				–	1	**LC2K0901●●**
3	5.5	4 (> 440)	**12**	1	–	**LC2K1210●●**
		5.5 (440)		–	1	**LC2K1201●●**
4	7.5	4 (> 440)	**16**	1	–	**LC2K1610●●**
		5.5 (440)		–	1	**LC2K1601●●**

Spring terminal connections

For 6 to 12 A ratings only, in the references selected above, insert a figure **3** before the voltage code.
Example: **LC2 K0610●●** becomes **LC2 K06103●●**.

Faston connectors, 1 x 6.35 or 2 x 2.8

For 6 to 16 A ratings, in the references selected above, insert a figure **7** before the voltage code.
Example: **LC2 K0610●●** becomes **LC2 K06107●●**.

Solder pins for printed circuit boards

For 6 to 16 A ratings, in the references selected above, insert a figure **5** before the voltage code.
Example: **LC2 K0610●●** becomes **LC2 K06105●●**.

3-pole silent reversing contactors

Recommended for use in areas sensitive to noise, high interference mains supplies, etc.
Coil with rectifier incorporated, suppressor fitted as standard.

Screw clamp connections						
1.5	2.2	3	**6**	1	–	**LC8K0610●●**
				–	1	**LC8K0601●●**
2.2	4	4	**9**	1	–	**LC8K0910●●**
				–	1	**LC8K0901●●**
3	5.5	4 (> 440)	**12**	1	–	**LC8K1210●●**
		5.5 (440)		–	1	**LC8K1201●●**

Faston connectors, 1 x 6.35 or 2 x 2.8

In the references selected above, insert a figure **7** before the voltage code.
Example: **LC8 K0610●●** becomes **LC8 K06107●●**.

Solder pins for printed circuit boards

In the references selected above, insert a figure **5** before the voltage code.
Example: **LC8 K0610●●** becomes **LC8 K06105●●**.

(1) Standard control circuit voltages (for other voltages, please consult your Regional Sales Office):

a.c. supply

Reversing contactors LC2 K (0.8…1.15 Uc) *(0.85…1.1 Uc)*

Volts	**12**	**20**	**24** (2)	**36**	**42**	**48**	**110**	**115**	**120**	**127**	**200/208**		***220/230***	**230**	***230/240***
50/60 Hz	J7	Z7	B7	C7	D7	E7	F7	FE7	G7	FC7	L7		*M7*	P7	U7
Volts	**256**	**277**	***380/400***		**400**	***400/415***		**440**	**480**	**500**	**575**	**600**	***660/690***		
50/60 Hz	W7	UE7	Q7		V7	*N7*		R7	T7	S7	SC7	X7	*Y7*		

Up to and including 240 V, coil with integral suppression device available: add **2** to the code required. Example: **J72.**

Reversing contactors LC8 K (0.8…1.1 Uc)

Volts	**24**	**42**	**48**	**110**	**115**	**220**	**230/240**
50/60 Hz	B7	D7	E7	F7	FE7	M7	U7

(2) For mains supplies with a high level of interference (voltage surge > 800 V), use a suppressor module LA4 KE1FC (50…129 V) or LA4 KE1UG (130…250 V), see page B8/44.

Contactors

TeSys contactors

Reversing contactors for motor control, 6 to 12 A in categories AC-3 and AC-4

Control circuit: d.c. or low consumption

Reversing contactor selection according to utilisation category, see pages A6/23 to A6/27 and A6/30 to A6/33.
Integral mechanical interlock.
It is essential to link the contacts of the electrical interlock.
Pre-wired power circuit connections as standard on screw clamp versions.
Mounting on 35 mm ⎓ rail or Ø4 screw fixing.
Screws in the open “ready-to-tighten” position.
Add-on auxiliary contact blocks and accessories, see pages B8/42 to B8/45.

3-pole reversing contactors, d.c. supply

Standard power ratings of 3-phase motors 50-60 Hz in category AC-3			Rated operational current in category AC-3 440 V up to	Instan-taneous auxiliary contacts per contactor		Basic reference, to be completed by adding the voltage code (1) (2)
220 V 230 V	380 V 415 V	440/500 V 660/690 V				
kW	kW	kW	A			
Screw clamp connections						
1.5	2.2	3	6	1	–	**LP2K0610●●**
				–	1	**LP2K0601●●**
2.2	4	4	9	1	–	**LP2K0910●●**
				–	1	**LP2K0901●●**
3	5.5	4 (> 440)	12	1	–	**LP2K1210●●**
		5.5 (440)		–	1	**LP2K1201●●**

Spring terminal connections

In the references selected above, insert a figure **3** before the voltage code.
Example: **LP2 K0610●●** becomes **LP2 K06103●●**.

Faston connectors, 1 x 6.35 or 2 x 2.8

In the references selected above, insert a figure **7** before the voltage code.
Example: **LC2 K0610●●** becomes **LC2 K06107●●**.

Solder pins for printed circuit boards

For 6 to 16 A ratings, in the references selected above, insert a figure **5** before the voltage code.
Example: **LC2 K0610●●** becomes **LC2 K06105●●**.

3-pole low consumption reversing contactors

Compatible with programmable controller outputs.
Wide range coil (0.7…1.30 Uc), suppressor fitted as standard, consumption 1.8 W.

Screw clamp connections						
1.5	2.2	3	6	1	–	**LP5K0610●●**
				–	1	**LP5K0601●●**
2.2	4	4	9	1	–	**LP5K0910●●**
				–	1	**LP5K0901●●**
3	5.5	4 (> 440)	12	1	–	**LP5K1210●●**
		5.5 (440)		–	1	**LP5K1201●●**

Spring terminal connections

In the references selected above, insert a figure **3** before the voltage code.
Example: **LP5 K0610●●** becomes **LP5 K06103●●**.

Faston connectors, 1 x 6.35 or 2 x 2.8

In the references selected above, insert a figure **7** before the voltage code.
Example: **LP5 K0610●●** becomes **LP5 K06107●●**.

Solder pins for printed circuit boards

In the references selected above, insert a figure **5** before the voltage code.
Example: **LP5 K0610●●** becomes **LP5 K06105●●**.

(1) Standard control circuit voltages (for other voltages, please consult your Regional Sales Office):

d.c. supply

Reversing contactors LP2 K (0.8…1.15 Uc)

Volts	**12**	**20**	**24** (2)	**36**	**48**	**60**	**72**	**100**	**110**	**125**	**155**	**174**	**200**	**220**	**230**	**240**	**250**
Code	JD	ZD	BD	CD	ED	ND	SD	KD	FD	GD	PD	QD	LD	MD	MPD	MUD	UD

Coil with integral suppression device available: add **3** to the code required. Example: **JD3**.

Low consumption

Reversing contactors LP5 K (0.7…1.30 Uc)

Volts	**12**	**20**	**24**	**48**	**72**	**110**	**120**
Code	JW3	ZW3	BW3	EW3	SW3	FW3	GW3

(2) For LP2 K only, when connecting an electronic sensor or timer in series with the contactor coil, select a 20 V coil (∼ control circuit voltage code Z7, ⎓ control circuit voltage code ZD) so as to compensate for the incurred voltage drop.

Selection: pages A6/23 and A6/33 | Characteristics: pages B8/83 to B8/86 | Dimensions: page B8/87 | Schemes: page B8/88

TeSys contactors

Reversing contactors for control in category AC-1, 20 A

Control circuit: a.c.

Warning: reversing contactors LC2 K0910●● and LC2 K0901●● are pre-wired for reverse motor operation as standard.
Reversing contactor selection according to utilisation category, see pages A6/28 and A6/29.
Integral mechanical interlock.
It is essential to link the contacts of the electrical interlock.
Mounting on 35 mm ⎓ rail or Ø4 screw fixing.
Screws in the open “ready-to-tighten” position.
Add-on auxiliary contact blocks and accessories, see pages B8/42 to B8/45.

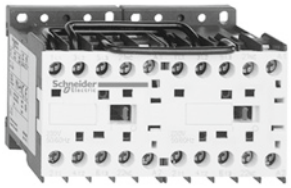
PF5111150R.eps

LC2 K0910●●

3 or 4-pole reversing contactors for standard applications (1)

Non-inductive loads Category AC-1 Maximum current at θ ≤ 50 °C	Number of poles	Instantaneous auxiliary contacts per contactor	Basic reference, to be completed by adding the voltage code (2) (3)
A			
Screw clamp connections			
20	3 –	1 –	**LC2K0910●●**
		or	**LC2K1210●●**
	3 –	– 1	**LC2K0901●●**
		or	**LC2K1201●●**
	4 –	– –	**LC2K09004●●**
		or	**LC2K12004●●**

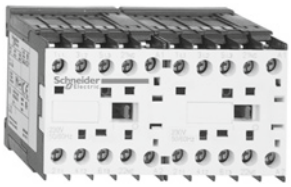
PF5111151R.eps

LC2 K09105●●

Spring terminal connections

In the references selected above, insert a figure **3** before the voltage code.
Example: **LC2 K0910●●** becomes **LC2 K09103●●**.

Faston connectors, 1 x 6.35 or 2 x 2.8

In the references selected above, insert a figure **7** before the voltage code.
Example: **LC2 K0910●●** becomes **LC2 K09107●●**.

Solder pins for printed circuit boards

In the references selected above, insert a figure **5** before the voltage code.
Example: **LC2 K0910●●** becomes **LC2 K09105●●**.

3 or 4-pole silent reversing contactors (1)

Recommended for use in areas sensitive to noise, high interference mains supplies, etc.
Coil with rectifier incorporated, suppressor fitted as standard.

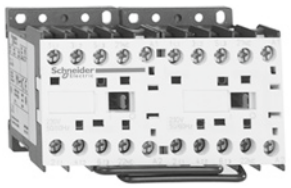
PF5111152R.eps

LC2 K09004●●

Screw clamp connections			
20	3 –	1 –	**LC8K0910●●**
		or	**LC8K1210●●**
	3 –	– 1	**LC8K0901●●**
		or	**LC8K1201●●**
	4 –	– –	**LC8K09004●●**
		or	**LC8K12004●●**

Faston connectors, 1 x 6.35 or 2 x 2.8

In the references selected above, insert a figure **7** before the voltage code.
Example: **LC8 K0910●●** becomes **LC8 K09107●●**.

Solder pins for printed circuit boards

In the references selected above, insert a figure **5** before the voltage code.
Example: **LC8 K0910●●** becomes **LC8 K09105●●**.

(1) Selection between 9 and 12 A ratings according to number of operating cycles, see AC-1 curve on page A6/28.
(2) Standard control circuit voltages (for other voltages, please consult your Regional Sales Office):

a.c. supply

Reversing contactors LC2 K (0.8…1.15 Uc) *(0.85…1.1 Uc)*

Volts	**12**	**20**	**24** (3)	**36**	**42**	**48**	**110**	**115**	**120**	**127**	**200/208**		***220/230***	***230***	***230/240***
50/60 Hz	J7	Z7	B7	C7	D7	E7	F7	FE7	G7	FC7	L7		*M7*	*P7*	*U7*
Volts	**256**	**277**	***380/400***		**400**	***400/415***		**440**	**480**	**500**	**575**	**600**	***660/690***		
50/60 Hz	W7	UE7	*Q7*		V7	*N7*		R7	T7	S7	SC7	X7	*Y7*		

Up to and including 240 V, coil with integral suppression device available: add **2** to the code required. Example: **J72**.

Reversing contactors LC8 K (0.8…1.1 Uc)

Volts	**24**	**42**	**48**	**110**	**115**	**220**	**230/240**
50/60 Hz	B7	D7	E7	F7	FE7	M7	U7

(3) For mains supplies with a high level of interference (voltage surge > 800 V), use a suppressor module LA4 KE1FC (50…129 V) or LA4 KE1UG (130…250 V), see page B8/44.

Contactors

TeSys contactors

Reversing contactors for control in category AC-1, 20 A

Control circuit: d.c. or low consumption

Warning: reversing contactors LP2 K0910●● and LP2 K0901●● are pre-wired for reverse motor operation as standard.
Reversing contactor selection according to utilisation category, see pages A6/28 and A6/29.
Integral mechanical interlock.
It is essential to link the contacts of the electrical interlock.
Mounting on 35 mm ⎓ rail or Ø4 screw fixing.
Screws in the open “ready-to-tighten” position.
Add-on auxiliary contact blocks and accessories, see pages B8/42 to B8/45.

3 or 4-pole reversing contactors, d.c. supply (1)

Non-inductive loads Category AC-1 Maximum current at θ ≤ 50 °C	Number of poles		Instantaneous auxiliary contacts per contactor			Basic reference, to be completed by adding the voltage code (2) (3)
						
A						
Screw clamp connections						
20	3	–	1	–		**LP2K0910●●**
					or	**LP2K1210●●**
	3	–	–	1		**LP2K0901●●**
					or	**LP2K1201●●**
	4	–	–	–		**LP2K09004●●**
					or	**LP2K12004●●**

Spring terminal connections
In the references selected above, insert a figure **3** before the voltage code.
Example: **LP2 K0910●●** becomes **LP2 K09103●●**.

Faston connectors, 1 x 6.35 or 2 x 2.8
In the references selected above, insert a figure **7** before the voltage code.
Example: **LP2 K0910●●** becomes **LP2 K09107●●**.

Solder pins for printed circuit boards
In the references selected above, insert a figure **5** before the voltage code.
Example: **LP2 K0910●●** becomes **LP2 K09105●●**.

3 or 4-pole low consumption reversing contactors (1)

Compatible with programmable controller outputs.
Wide range coil (0.7…1.30 Uc), suppressor fitted as standard, consumption 1.8 W.

Screw clamp connections						
20	3	–	1	–		**LP5K0910●●●**
					or	**LP5K1210●●●**
	3	–	–	1		**LP5K0901●●●**
					or	**LP5K1201●●●**
	4	–	–	–		**LP5K09004●●●**
					or	**LP5K12004●●●**

Spring terminal connections
In the references selected above, insert a figure **3** before the voltage code.
Example: **LP5 K0910●●** becomes **LP5 K09103●●**.

Faston connectors, 1 x 6.35 or 2 x 2.8
In the references selected above, insert a figure **7** before the voltage code.
Example: **LP5 K0910●●** becomes **LP5 K09107●●**.

Solder pins for printed circuit boards
In the references selected above, insert a figure **5** before the voltage code.
Example: **LP5 K0910●●** becomes **LP5 K09105●●**.

(1) Selection between 9 and 12 A ratings according to number of operating cycles, see AC-1 curve on page A6/28.
(2) Standard control circuit voltages (for other voltages, please consult your Regional Sales Office):

d.c. supply (reversing contactors LP2 K: 0.8…1.15 Uc)

Volts ⎓	**12**	**20**	**24 (3)**	**36**	**48**	**60**	**72**	**100**	**110**	**125**	**155**	**174**	**200**	**220**	**230**	**240**	**250**
Code	JD	ZD	BD	CD	ED	ND	SD	KD	FD	GD	PD	QD	LD	MD	MPD	MUD	UD

Coil with integral suppression device available: add **3** to the code required. Example: **JD3**.

Low consumption (reversing contactors LP5 K: 0.7…130 Uc)

Volts ⎓	**12**	**20**	**24**	**48**	**72**	**110**	**120**
Code	JW3	ZW3	BW3	EW3	SW3	FW3	GW3

(3) For LP2 K only, when connecting an electronic sensor or timer in series with the contactor coil, select a 20 V coil (∿ control circuit voltage code Z7, ⎓ control circuit voltage code ZD) so as to compensate for the incurred voltage drop.

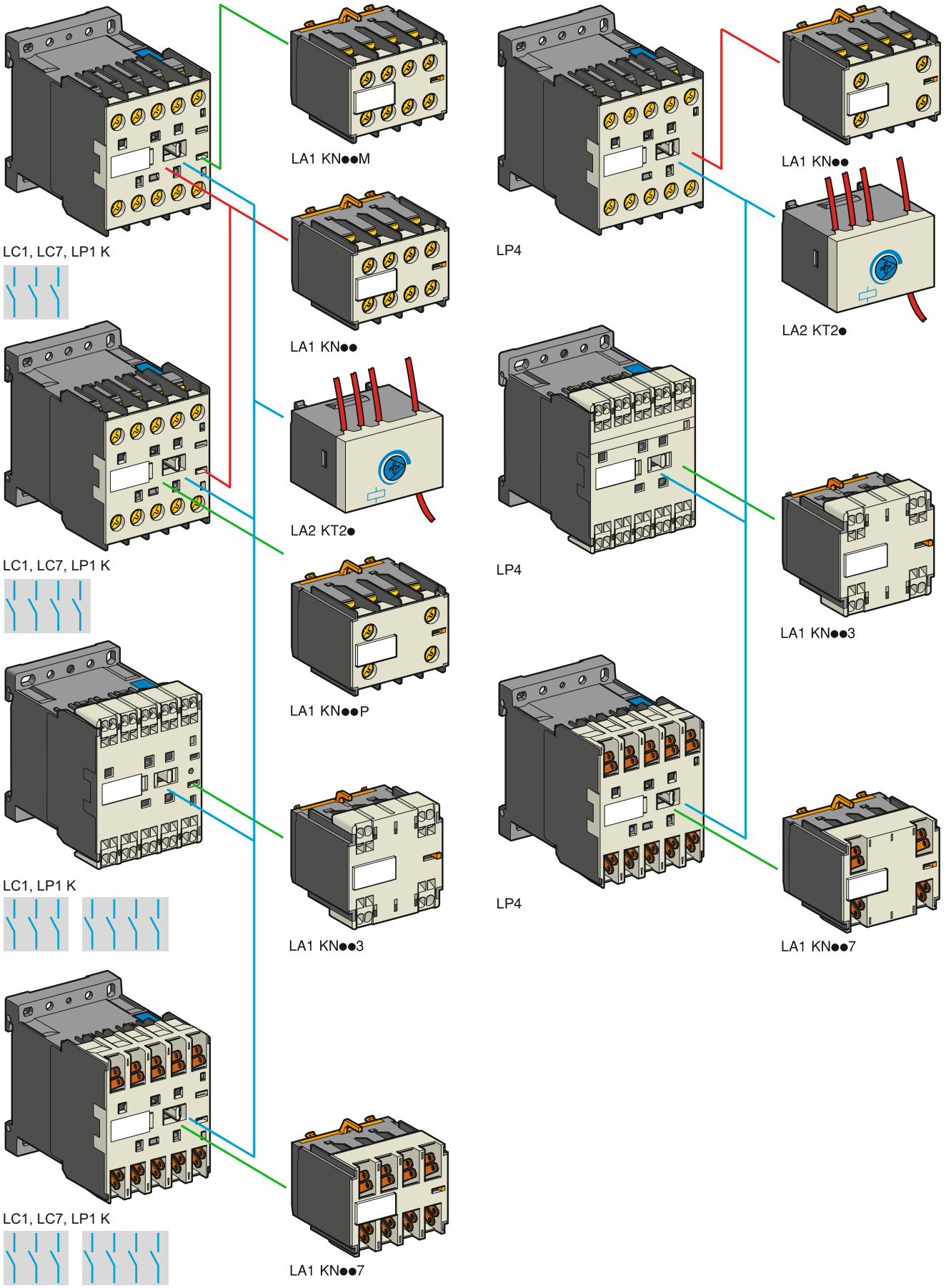
LC1, LC7, LP1 K
LA1 KN●●M
LA1 KN●●
LP4
LA1 KN●●
LA2 KT2●
LC1, LC7, LP1 K
LA2 KT2●
LP4
LA1 KN●●3
LA1 KN●●P
LC1, LP1 K
LA1 KN●●3
LP4
LA1 KN●●7
LC1, LC7, LP1 K
LA1 KN●●7

TeSys contactors

TeSys K contactors and reversing contactors

Auxiliary contact blocks

Instantaneous auxiliary contact blocks

Recommended for standard applications. Clip-on front mounting, 1 block per contactor

Connection	For use on contactors	Composition		Reference
Screw clamp terminals	All products with screw clamp terminals	2	–	**LA1KN20**
		–	2	**LA1KN02**
		1	1	**LA1KN11**
	All products with screw clamp terminals except low consumption	4	–	**LA1KN40**
		3	1	**LA1KN31**
		2	2	**LA1KN22**
		1	3	**LA1KN13**
		–	4	**LA1KN04**
Spring terminals	All products with spring terminals	2	–	**LA1KN203**
		–	2	**LA1KN023**
		1	1	**LA1KN113**
	All products with spring terminals except low consumption	4	–	**LA1KN403**
		3	1	**LA1KN313**
		2	2	**LA1KN223**
		1	3	**LA1KN133**
		–	4	**LA1KN043**
Faston connectors, 1 x 6.35 or 2 x 2.8	All products with Faston connectors	2	–	**LA1KN207**
		–	2	**LA1KN027**
		1	1	**LA1KN117**
	All products with Faston connectors except low consumption	4	–	**LA1KN407**
		3	1	**LA1KN317**
		2	2	**LA1KN227**
		1	3	**LA1KN137**
		–	4	**LA1KN047**

With terminal referencing to standard EN 50012. Clip-on front mounting, 1 block per contactor

Screw clamp terminals with referencing conforming to standard EN 50012	All 3-pole + N/O products with screw clamp terminals except LP4 and LP5 K12	–	2	**LA1KN02M**
		1	1	**LA1KN11M**
	All 3-pole + N/O products with screw clamp terminals except LP4 or LP5 K06, K09 and K12	3	1	**LA1KN31M**
		2	2	**LA1KN22M**
		1	3	**LA1KN13M**
	All 4-pole products with screw clamp terminals except LP4 or LP5 K12	1	1	**LA1KN11P**
	All 4-pole products with screw clamp terminals except LP4 or LP5 K09 and K12	2	2	**LA1KN22P**

Electronic time delay auxiliary contact blocks

Relay output with common point changeover contact, ∿ or ⎓ 240 V, 2 A maximum.
Control voltage 0.85…1.1 Uc.
Maximum switching capacity 250 VA or 150 W.
Operating temperature -10…+60 °C.
Reset time: 1.5 s during the time delay period, 0.5 s after the time delay period.

Clip-on front mounting, 1 block per contactor

Voltage	Type	Timing range	Composition	Reference
V		s		
∿ or ⎓ 24…48	On-delay	1…30	1	**LA2KT2E**
∿ 110…240	On-delay	1…30	1	**LA2KT2U**

Contactors

TeSys contactors

TeSys K contactors and reversing contactors

Suppressor modules incorporating LED indicator

DF565018.eps

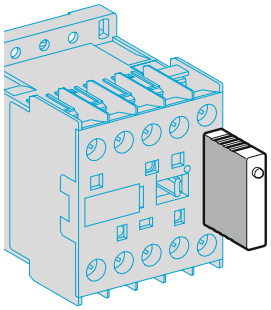

LA4 K●●●

References

Mounting and connection	Type	For voltages	Sold in lots of	Unit reference
Clip-on fixing on the front of contactors LC1 and LP1, with locating device. No tools required.	Varistor (1)	∿ and ⎓ 12…24 V	5	**LA4KE1B**
		∿ and ⎓ 32…48 V	5	**LA4KE1E**
		∿ and ⎓ 50…129 V	5	**LA4KE1FC**
		∿ and ⎓ 130…250 V	5	**LA4KE1UG**
	Diode + Zener diode (2)	⎓ 12…24 V	5	**LA4KC1B**
		⎓ 32…48 V	5	**LA4KC1E**
	RC (3)	∿ 110…250 V	5	**LA4KA1U**

(1) Protection provided by limiting the transient voltage to 2 Uc max.
Maximum reduction of transient voltage peaks.
Slight increase in drop-out time (1.1 to 1.5 times the normal time).
(2) No overvoltage or oscillating frequency.
Polarised component.
Slight increase in drop-out time (1.1 to 1.5 times the normal time).
(3) Protection by limiting the transient voltage to 3 Uc max. and limitation of the oscillating frequency.
Slight increase in drop-out time (1.2 to 2 times the normal time).

Characteristics: page B8/86
Dimensions: pages B8/87 and B8/89
Schemes: pages B8/88 and B8/90

TeSys contactors
TeSys K contactors and reversing contactors
Accessories

DF563019.eps

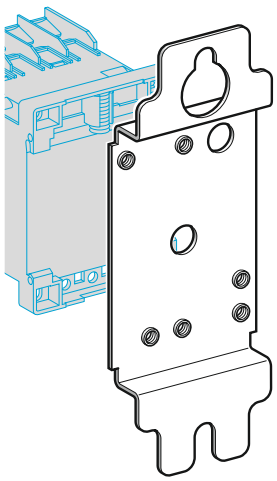

DX1 AP25

Mounting and marking accessories

Description	Application		Sold in lots of	Unit reference
Mounting plates (1)	For fixing on 1 ⊔ rail	Clip-on	1	**LA9D973**
	For fixing on 2 ⊔ rails	110/120 mm fixing centres	10	**DX1AP25**
Marker holder	Clip-on	Onto front of contactor	100	**LA9D90**
Clip-in markers	4 maximum per contactor	Strips of 10 identical numbers 0…9	25	**AB1R●** (2)
		Strips of 10 identical letters A…Z	25	**AB1G●** (2)

DF563020.eps

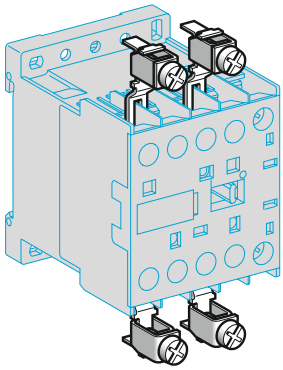

LA9 E01

Connection accessories

Description	Application		Sold in lots of	Unit preference
Paralleling links	For 2 poles	With screw clamps	4	**LA9E01**
	For 4 poles	With screw clamps	2	**LA9E02**
Set of 6 power connections	For 3-pole reversing contactors for motor control	For contactors with screw clamp terminals	100	**LA9K0969**
Set of 4 power connections	For 4-pole changeover contactor pairs	For contactors with screw clamp terminals	100	**LA9K0970**

(1) Order 1 mounting plate for fixing a contactor and 2 mounting plates for fixing a reversing contactor.
(2) Complete the reference by replacing the dot with the required character.

TeSys contactors

Mini-contactors TeSys LC1 SKGC, for use in modular panels

TeSys SKGC

- Mounting on 35 mm ⎓ rail or fixing by four Ø4 screws, except for LC1 SKGC200.
- Connection by connectors.
- Mini-contactor fitted with transparent, sealable protective cover to prevent front face access.

PF511135R.eps



LC1 SKGC200

Mini-contactors, width 27 mm

Standard power ratings of 3-phase motors 50/60 Hz in category AC-3			Rated operational current in AC-3 up to 400 V	Non inductive loads category AC-1 maximum current θ ≤ 50 °C	No. of poles			Basic reference, to be completed by adding the voltage code (1)
220 V 230 V	380 V 415 V	660 V 690 V						
kW	kW	kW	A	A				
–	–	–	5	20	2	–	–	**LC1SKGC200●●**

PF511136R.eps



LC1 SKGC400

Mini-contactors, width 45 mm

Standard power ratings of 3-phase motors 50/60 Hz in category AC-3			Rated operational current in AC-3 up to 400 V	Non inductive loads category AC-1 maximum current θ ≤ 50 °C	No. of poles			Basic reference, to be completed by adding the voltage code (1)
220 V 230 V	380 V 415 V	660 V 690 V						
kW	kW	kW	A	A				
1.1	4	4	9	20	3	1	–	**LC1SKGC310●●**
					3	–	1	**LC1SKGC301●●**
					4	–	–	**LC1SKGC400●●**

(1) Standard control circuit voltages (for other voltages, please consult your Regional Sales Office):

Volts ∼ 50/60 Hz	24	48	110	120	220	230	240	380	400
Code	B7	E7	F7	G7	M7	P7	U7	Q7	V7

Characteristics: pages B8/91 to B8/94
Dimensions, schemes: page B8/95

TeSys contactors

Mini-contactors TeSys LC1 SKGC, for use in modular panels

Suppressor modules

PF511134R.eps



LA4 SK●1●

Suppressor modules

Connection without need for tools by clipping onto right-hand side of contactor

For use on contactors	Type	For voltages	Sold in lots of	Unit reference
LC1SKGC	Varistor (1)	~ and ⎓ 24…48 V	10	**LA4SKE1E**
		~ and ⎓ 110…250 V	10	**LA4SKE1U**
	Diode (2)	⎓ 24…250 V	10	**LA4SKC1U**

(1) Protection provided by limiting the transient voltage to 2 Uc max.
Maximum reduction of transient voltage peaks.
Slight increase in drop-out time (1.1 to 1.5 times the normal time).
(2) No overvoltage or oscillating frequency.
Slight increase in drop-out time (1.1 to 1.5 times the normal time).

Contactors

Characteristics: pages B8/91 to B8/94
Dimensions, schemes: page B8/95

Modular equipment
Standard contactors TeSys GC

TeSys GC

PB113075_12.eps



GC 2520

PB113078_18.eps



GC 4040

PB113079_24.eps



GC 10020

Standard contactors, TeSys GC

No. of poles		Number of 17.5 mm modules	Commercial reference 50 Hz coil - different voltages					Sold in lots of
			12 V	24 V	48 V	110 V	220/240 V	
Maximum current rating category AC-7a - 16 A								
1	–	1	**GC1610J5**	**GC1610B5**	**GC1610E5**	**GC1610F5**	**GC1610M5** ★	12
1	1	1	**GC1611J5**	**GC1611B5**	–	**GC1611F5**	**GC1611M5** ★	12
2	–	1	**GC1620J5**	**GC1620B5**	**GC1620E5**	**GC1620F5** ★	**GC1620M5** ★	12
2	2	2	–	**GC1622B5**	**GC1622E5**	**GC1622F5** ★	**GC1622M5**	6
3	–	2	–	–	–	–	**GC1630B5** **GC1630M5** ★	6
4	–	2	–	**GC1640B5**	–	**GC1640F5**	**GC1640M5** ★	6
Maximum current rating category AC-7a - 25 A								
–	2	1	–	**GC2502B5**	**GC2502E5**	★	**GC2502M5** ★	12
–	4	2	–	**GC2504B5**	**GC2504E5**	★	**GC2504M5** ★	6
1	–	1	–	**GC2510B5**	–	–	**GC2510M5** ★	12
1	1	1	–	**GC2511B5**	–	**GC2511F5**	**GC2511M5** ★	12
2	–	1	**GC2520J5**	**GC2520B5**	**GC2520E5**	**GC2520F5** ★	**GC2520M5** ★	12
2	2	2	–	**GC2522B5**	**GC2522E5**	**GC2522F5**	**GC2522M5** ★	6
3	–	2	–	**GC2530B5**	–	**GC2530F5**	**GC2530M5** ★	6
3	2	1	–	–	–	–	**GC2531M5**	6
4	–	2	**GC2540J5**	**GC2540B5**	**GC2540E5**	**GC2540F5** ★	**GC2540M5** ★	6
Maximum current rating category AC-7a - 40 A								
–	2	2	–	**GC4002B5**	–	–	**GC4002M5** ★	6
–	4	3	–	**GC4004B5**	–	**GC4004F5** ★	**GC4004M5**	4
1	1	2	–	**GC4011B5**	–	–	**GC4011M5** ★	6
2	–	2	–	**GC4020B5**	–	**GC4020F5** ★	**GC4020M5** ★	6
2	2	3	–	–	–	–	**GC4022M5**	4
3	–	3	–	**GC4030B5**	–	**GC4030F5**	**GC4030M5** ★	4
4	–	3	–	**GC4040B5**	**GC4040E5**	**GC4040F5** ★	**GC4040M5** ★	4
Maximum current rating category AC-7a - 63 A								
–	2	2	–	–	–	–	**GC6302M5**	6
–	4	3	–	**GC6304B5**	–	–	**GC6304M5**	4
1	1	2	–	–	–	–	**GC6311M5**	6
2	–	2	–	–	–	–	**GC6320M5**	6
2	2	3	–	–	–	**GC6322F5**	**GC6322M5**	4
3	–	3	–	**GC6330B5**	–	**GC6330F5**	**GC6330M5** ★	4
4	–	3		**GC6340B5**	**GC6340E5**	**GC6340F5** ★	**GC6340M5** ★	4
Maximum current rating category AC-7a - 100 A								
2	–	3	–	–	–	–	**GC10020M5**	4
4	–	6	–	**GC10040B5**	–	–	**GC10040M5** ★	2

★ *for 60 Hz coil replace last figure 5 by 6.*

Selection: pages B8/98 to B8/101
Characteristics: pages B8/102 and B8/103
Dimensions, schemes: pages B8/104 and B8/105

Modular equipment
TeSys GY "dual tariff" contactors

TeSys GY

PB113083_13.eps



GY 2520M5

PB113087_26.eps



GY 6340M5

TeSys GY "dual tariff" contactors

No. of poles		Number of 17.5 mm modules	Commercial reference 50 Hz coil - different voltages					Sold in lots of
			12 V	24 V	48 V	110 V	220/240 V	
Maximum current rating category AC-7a - 16 A								
2	–	1	–	**GY1620B5**		–	**GY1620M5**	12
4	–	2	–	–	–	–	**GY1640M5**	6
Maximum current rating category AC-7a - 25 A								
2	–	1	–	**GY2520B5**	–	–	**GY2520M5** ★	12
3	–	2	–	–	–	–	**GY2530M5**	6
4	–	2	–	**GY2540B5**	–	–	**GY2540M5**	6
Maximum current rating category AC-7a - 40 A								
2	–	2	–	–	–	–	**GY4020M5**	6
3	–	3	–	–	–	–	**GY4030M5**	4
4	–	3	–	**GY4040B5**	–	–	**GY4040M5**	4
Maximum current rating category AC-7a - 63 A								
2	–	2	–	–	–	–	**GY6320M5**	6
4	–	3	–	**GY6340B5**	–	–	**GY6340M5**	4

★ *for 60 Hz coil replace last figure 5 by 6.*

Modular equipment
TeSys GF impulse relays

TeSys GF

PF5282284R.eps



GF 1611M7

TeSys GF impulse relays

Maximum current rating category AC-1	Composition		Coil voltages ~ 50/60 Hz	Coil voltages ⎓	Sold in lots of	Unit reference
A			V	V		
16	1	–	12	6	12	**GF1610J7**
			24	12	12	**GF1610B7**
			48	24	12	**GF1610E7**
			110	48	12	**GF1610F7**
			220	–	12	**GF1610M7**
			230/240	110	12	**GF1610U7**
	2	–	12	6	12	**GF1620J7**
			24	12	12	**GF1620B7**
			48	24	12	**GF1620E7**
			110	48	12	**GF1620F7**
			220	–	12	**GF1620M7**
			230/240	110	12	**GF1620U7**
	1	1	12	6	12	**GF1611J7**
			24	12	12	**GF1611B7**
			48	24	12	**GF1611E7**
			110	48	12	**GF1611F7**
			220	–	12	**GF1611M7**
			230/240	110	12	**GF1611U7**

Presentation: page B8/112
Selection: page B8/113
Characteristics: pages B8/114 and B8/115
Dimensions, schemes: page B8/116

Modular equipment
TeSys GC, GY accessories

TeSys GC, GY

PB113093_13.eps



GAP 23

PB104483-40.eps



GAC 5

PB104486_34.eps



A9A15922

PB104487_49.eps



A9A15923

Instantaneous auxiliary contact blocks

Number of contacts	Number of poles			Reference
	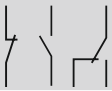			
2	1	1	–	**GAC0521**
	–	2	–	**GAC0531**
	–	–	1	**GAC0511**

Accessories

Description	For use on contactor	Number of modules	Operational voltage in V	Sold in lots of	Unit reference
Coil suppression blocks comprising 2 RC circuits	–	1	12…48	1	**GAP21**
			110…240	1	**GAP23**
Ventilation 1/2 module clips onto ⊥ rail	–	1/2	–	10	**GAC5**
Set of screw shields (10 top parts + 10 bottom parts)	40 or 63 A 2 contacts	2	–	1	**A9A15922**
	40 or 63 A 3 or 4 contacts	3	–	1	**A9A15923**

TeSys D, SK, K, SKGC, GC, GY, GF

Technical Data for Designers

Contents

TeSys D:
> characteristics ..... B8/55 to B8/66
> dimensions ..... B8/67 to B8/77

TeSys SK:
> characteristics ..... B8/78 to B8/81
> dimensions B8/82

TeSys K:
> characteristics ..... B8/83 to B8/86
> dimensions ..... B8/87 to B8/90

TeSys SKGC:
> characteristics ..... B8/91 to B8/94
> dimensions B8/95

TeSys GC:
> characteristics ..... B8/96 to B8/103
> dimensions ..... B8/104 and B8/105

TeSys GY:
> characteristics ..... B8/106 to B8/109
> dimensions ..... B8/110 and B8/111

TeSys GF:
> characteristics ..... B8/112 to B8/115
> dimensions B8/116

Standard IEC tests - Contactors conforming to UL/CSA B8/117

TeSys D

Environment

Contactor type LC1			D09…D18 DT20 and DT25	D25…D38 DT32 and DT40	D40A…D65A DT60A and DT80A	D80…D95	D115 and D150
Rated insulation voltage (Ui)	Conforming to IEC 60947-4-1, overvoltage category III, degree of pollution: 3	V	690			1000	
	Conforming to UL, CSA	V	600				
Rated impulse withstand voltage (Uimp)	Conforming to IEC 60947	kV	6			8	
Conforming to standards			IEC/EN 60947-4-1, IEC/EN 60947-5-1, UL 508, CSA C22.2 n°14.				
Product certifications			UL, CSA (1), CCC, GOST GL, DNV, RINA, BV, LROS				
Degree of protection (2) (front face)	Conforming to IEC 60529						
	Power circuit connections		Protection against direct finger contact IP20				
	Coil connection		Protection against direct finger contact IP20				
Protective treatment	Conforming to IEC 60068-2-30		"TH"				
Ambient air temperature around the device	Storage	°C	-60…+80				
	Operation	°C	-5…+60				
	Permissible	°C	-40…+70, for operation at Uc				
Maximum operating altitude	Without derating	m	3000				
Operating positions (3)	Without derating in the following positions		~/⎓ 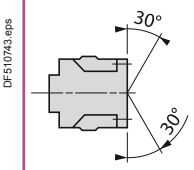 ~ 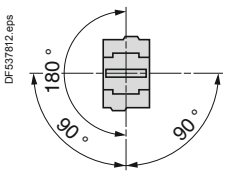 ⎓ 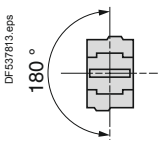				
	Positions that are not permissible		For ⎓ contactors LC1 D09 to LC1 D65A. 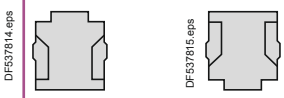				
Flame resistance	Conforming to UL 94		V1				
	Conforming to IEC 60695-2-1	°C	850				
Shock resistance (4) 1/2 sine wave = 11 ms	Contactor open		10 gn	8 gn	10 gn	8 gn	6 gn
	Contactor closed		15 gn	15 gn	15 gn	10 gn	15 gn
Vibration resistance (4) 5…300 Hz	Contactor open		2 gn				
	Contactor closed		4 gn	4 gn	4 gn	3 gn	4 gn

(1) Contactor LC1 D95 with d.c. coil is not UL/CSA certified.
(2) Protection provided for the cabling c.s.a.'s indicated on the next page and for connection by cable. For lug type: add a protective cover.
(3) When mounting on a vertical rail, use a stop.
(4) Without modifying the contact states, in the most unfavourable direction (coil energised at Ue).

TeSys contactors
TeSys D contactors

TeSys D

Pole characteristics

Contactor type			LC1		D09 (3P)	DT20 D098	D12 (3P)	DT25 D128	D18 (3P)	DT32 D188	D25 (3P)	DT40 D258
Rated operational current (Ie) (Ue ≤ 440 V)	In AC-3, θ ≤ 60 °C		**A**		9		12		18		25	
	In AC-1, θ ≤ 60 °C		**A**		25 (1)	20	25 (1)	25	32 (1)	32	40 (1)	40
Rated operational voltage (Ue)	Up to		**V**		690		690		690		690	
Frequency limits	Of the operational current		**Hz**		25…400		25…400		25…400		25…400	
Conventional thermal current (Ith)	θ ≤ 60 °C		**A**		25 (1)	20	25 (1)	25	32 (1)	32	40 (1)	40
Rated making capacity (440 V)	Conforming to IEC 60947		**A**		250		250		300		450	
Rated breaking capacity (440 V)	Conforming to IEC 60947		**A**		250		250		300		450	
Permissible short time rating No current flowing for preceding 15 minutes with θ ≤ 40 °C	For 1 s		**A**		210		210		240		380	
	For 10 s		**A**		105		105		145		240	
	For 1 min		**A**		61		61		84		120	
	For 10 min		**A**		30		30		40		50	
Fuse protection against short-circuits (U ≤ 690 V)	Without thermal overload relay, gG fuse	type 1	**A**		25		40		50		63	
		type 2	**A**		20		25		35		40	
	With thermal overload relay		**A**		See pages B11/4 and B11/5, for aM or gG fuse ratings corresponding to the associated thermal overload relay							
Average impedance per pole	At Ith and 50 Hz		**mΩ**		2.5		2.5		2.5		2	
Power dissipation per pole for the above operational currents	AC-3		**W**		0.20		0.36		0.8		1.25	
	AC-1		**W**		1.56		1.56		2.5		3.2	

Control circuit characteristics, a.c. supply

Rated control circuit voltage (Uc)			50/60 Hz	**V**	12…690	
Control voltage limits						
	50 or 60 Hz coils	Operation			–	
		Drop-out			–	
	50/60 Hz coils	Operation			0.8…1.1 Uc on 50 Hz and 0.85…1.1 Uc on 60 Hz at 60 °C	
		Drop-out			0.3…0.6 Uc at 60 °C	
Average consumption at 20 °C and at Uc	∼ 50 Hz	Inrush	50 Hz coil	**VA**	–	
			Cos φ		0.75	
			50/60 Hz coil	**VA**	70	
		Sealed	50 Hz coil	**VA**	–	
			Cos φ		0.3	
			50/60 Hz coil	**VA**	7	
	∼ 60 Hz	Inrush	60 Hz coil	**VA**	–	
			Cos φ		0.75	
			50/60 Hz coil	**VA**	70	
		Sealed	60 Hz coil	**VA**	–	
			Cos φ		0.3	
			50/60 Hz coil	**VA**	7.5	
Heat dissipation	50/60 Hz			**W**	2…3	
Operating time (2)		Closing "C"		**ms**	12…22	
		Opening "O"		**ms**	4…19	
Mechanical durability in millions of operating cycles		50 or 60 Hz coil			–	
		50/60 Hz coil on 50 Hz			15	
Maximum operating rate at ambient temperature ≤ 60 °C		In operating cycles per hour			3600	

(1) Versions with spring terminal connections:
*16 A for **LC1 D093** and **LC1 D123** (20 A possible with 2 x 2.5 mm² in parallel),*
*25 A for **LC1 D183** to **LC1 D323** (32 A possible for **LC1 D183** connected with 2 x 4 mm² cables in parallel; 40 A possible for **LC1 D253** and **LC1 D323** connected with 2 x 4 mm² in parallel).*

(2) The closing time "C" is measured from the moment the coil supply is switched on to closure of the main poles. The opening time "O" is measured from the moment the coil supply is switched off to the moment the main poles separate.

D32	D38	D40A	DT60A	D50A	D65A	DT80A	D80	D95	D115	D150
32	38	40	–	50	65	–	80	95	115	150
50 (1)	50	60	60	80	80	80	125	125	200	200
690	690	690	690	690	690	690	1000	1000	1000	1000
25…400	25…400	25…400	25…400	25…400	25…400	25…400	25…400	25…400	25…400	25…400
50	50	60	60	80	80	80	125	125	200	200
550	550	800	800	900	1000	1000	1100	1100	1260	1660
550	550	800	800	900	1000	1000	1100	1100	1100	1400
430	430	720	720	810	900	900	990	1100	1100	1400
260	310	320	320	400	520	520	640	800	950	1200
138	150	165	165	208	260	260	320	400	550	580
60	60	72	72	84	110	110	135	135	250	250
63	63	80	80	100	125	125	200	200	250	315
63	63	80	80	100	125	125	160	160	200	250

See pages B11/4 and B11/5 for aM or gG fuse ratings corresponding to the associated thermal overload relay

2	2	1.5	1.6	1.5	1.5	1.6	0.8	0.8	0.6	0.6
2	3	2.4	–	3.7	6.3	–	5.1	7.2	7.9	13.5
5	5	5.4	5.8	9.6	9.6	10.2	12.5	12.5	24	24

12…690	12…690								24…500	
–	–						0.85…1.1 Uc at 55 °C			
–	–						0.3…0.6 Uc at 55 °C		0.3…0.5 Uc at 55 °C	
0.8…1.1 Uc on 50 Hz and 0.85…1.1 Uc on 60 Hz at 60 °C	0.8…1.1 Uc on 50 Hz and 0.85…1.1 Uc on 60 Hz at 60 °C						0.8…1.1 Uc on 50 Hz and 0.85…1.1 Uc on 60 Hz at 55 °C		0.8…1.15 Uc on 50/60 Hz at 55 °C	
0.3…0.6 Uc at 60 °C	0.3…0.6 Uc at 60 °C						0.3…0.6 Uc at 55 °C		0.3…0.5 Uc at 55 °C	
–	–						200		300	–
0.75	0.75						0.75		0.8	0.9
70	160						245		280…350	280…350
–	–						20		22	–
0.3	0.3						0.3		0.3	0.9
7	15						26		2…18	2…18
–	–						220		300	–
0.75	0.75						0.75		0.8	0.9
70	140						245		280…350	280…350
–	–						22		22	–
0.3	0.3						0.3		0.3	0.9
7.5	13						26		2…18	2…18
2…3	4…5						6…10		3…8	3…4.5
12…22	12…26	12…26	12…26	12…26	12…26		20…35	20…35	20…50	20…35
4…19	4…19	4…19	4…19	4…19	4…19		6…20	6…20	6…20	40…75
–	–	–	–	–	–		10	10	8	–
15	6	6	6	6	6		4	4	8	8
3600	3600	3600	3600	3600	3600		3600	3600	2400	1200

TeSys D

Power circuit connections

Screw clamp terminal connections

Contactor type		LC1		D09 and D12 DT20 and DT25	D18 (3P)	D25 (3P)	D32	D38	D18 and D25 (4P) DT32 and DT40	D40A to D65A DT60A and DT80A (1)	D80 and D95	D115 and D150
Tightening				Screw clamp terminals					Connector 2 inputs	Screw clamp terminals	Connector 1 input	Connector 2 inputs
Flexible cable without cable end	1 conductor		mm²	1…4	1.5…6	2.5…10			2.5…10	1…35	4…50	10…120
	2 conductors		mm²	1…4	1.5…6	2.5…10			2.5…10	1…25 and 1…35	4…25	10…120 + 10…50
Flexible cable with cable end	1 conductor		mm²	1…4	1…6	1…10			2.5…10	1…35	4…50	10…120
	2 conductors		mm²	1…2.5	1…4	1.5…6			2.5…10	1…25 and 1…35	4…16	10…120 + 10…50
Solid cable without cable end	1 conductor		mm²	1…4	1.5…6	1.5…10			2.5…16	1…35	4…50	10…120
	2 conductors		mm²	1…4	1.5…6	2.5…10			2.5…16	1…25 and 1…35	6…25	10…120 + 10…50
Screwdriver	Philips			N° 2	N° 2	N° 2			N° 2	–	–	–
	Flat screwdriver Ø			Ø6	Ø6	Ø6			Ø6	–	Ø6…Ø8	–
Hexagonal key				–	–	–			–	4	4	4
Tightening torque			N.m	1.7	1.7	2.5			1.8	5: ⩽ 25 mm² 8: 35 mm²	9	12
Spring terminal connections (2)												
Flexible cable without cable end	1 conductor		mm²	2.5 (4: DT25)	4	4	4	–	10	–	–	
	2 conductors		mm²	2.5 (except DT25)	4	4	4	–	–	–	–	
Connection by bars or lugs												
Bar c.s.a.				–	–	–	–		–	–	3 x 16	5 x 25
Lug external Ø			mm	8	8	10	10		8	16.5	17	25
Ø of screw			mm	M3.5	M3.5	M4	M4		M3.5	M6	M6	M8
Screwdriver	Philips			N° 2	N° 2	N° 2	N° 2		N° 2	–	–	–
	Flat screwdriver Ø			Ø6	Ø6	Ø6	Ø6		Ø6	–	Ø8	–
Key for hexagonal headed screw				–	–	–	–		–	10	10	13
Tightening torque			N.m	1.7	1.7	2.5	2.5		1.8	6	9	12

Control circuit connections

Connection by cable (tightening via screw clamps)

Flexible cable without cable end	1 conductor		mm²	1…4	1…4	1…4	1…4		1…4	1…4	1…4	1…2.5
	2 conductors		mm²	1…4	1…4	1…4	1…4		1…4	1…4	1…4	1…2.5
Flexible cable with cable end	1 conductor		mm²	1…4	1…4	1…4	1…4		1…4	1…4	1…2.5	1…2.5
	2 conductors		mm²	1…2.5	1…2.5	1…2.5	1…2.5		1…2.5	1…2.5	1…2.5	1…2.5
Solid cable without cable end	1 conductor		mm²	1…4	1…4	1…4	1…4		1…4	1…4	1…4	1…2.5
	2 conductors		mm²	1…4	1…4	1…4	1…4		1…4	1…4	1…4	1…2.5
Screwdriver	Philips			N° 2	N° 2	N° 2	N° 2		N° 2	N° 2	N° 2	N° 2
	Flat screwdriver Ø			Ø6	Ø6	Ø6	Ø6		Ø6	Ø6	Ø6	Ø6
Tightening torque			N.m	1.7	1.7	1.7	1.7		1.7	1.7	1.7	1.2
Spring terminal connections (2)												
Flexible cable without cable end	1 conductor		mm²	2.5	2.5	2.5	2.5	–	2.5	0.75…2.5	–	–
	2 conductors		mm²	2.5	2.5	2.5	2.5	–	2.5	0.75…2.5	–	–
Connection by bars or lugs												
Lug external Ø			mm	8	8	8	8		8	8	8	8
Ø of screw			mm	M3.5	M3.5	M3.5	M3.5		M3.5	M3.5	M3.5	M3.5
Screwdriver	Philips			N° 2	N° 2	N° 2	N° 2		N° 2	N° 2	N° 2	N° 2
	Flat screwdriver Ø			Ø6	Ø6	Ø6	Ø6		Ø6	Ø6	Ø6	Ø6
Tightening torque			N.m	1.7	1.7	1.7	1.7		1.7	1.7	1.7	1.2

*(1) BTR screws: hexagon socket head. In accordance with local electrical wiring regulations, a size 4 insulated Allen key must be used (reference **LAD ALLEN4**, see page B8/21).*
(2) If cable ends are used, choose the next size down (example: for 2.5 mm², use 1.5 mm²) and square crimp the cable ends using a special tool.

TeSys D

d.c. control circuit characteristics

Contactor type				LC1 D09…D38 LC1 DT20…DT40	LC1 D40A…D65A LC1 DT60A and DT80A	LC1 or LP1 D80 LC1 D95	LC1 D115 and LC1 D150
Rated control circuit voltage (Uc)	⎓		**V**	12…440	12…440		24…440
Rated insulation voltage	Conforming to IEC 60947-1		**V**	690			
	Conforming to UL, CSA		**V**	600			
Control voltage limits	Operation	Standard coil		0.7…1.25 Uc at 60 °C	0.75…1.25 Uc at 60 °C	0.85…1.1 Uc at 55 °C	0.75…1.2 Uc at 55 °C
		Wide range coil		–	–	0.75…1.2 Uc at 55 °C	–
	Drop-out			0.1…0.25 Uc at 60 °C	0.1…0.3 Uc at 60 °C	0.1…0.3 Uc at 55 °C	0.15…0.4 Uc at 55 °C
Average consumption at 20 °C and at Uc	⎓	Inrush	**W**	5.4	19	22	270…365
		Sealed	**W**	5.4	7.4	22	2.4…5.1
Operating time (1) average at Uc	Closing	"C"	**ms**	63 ±15 %	50 ±15%	95…130	20…35
	Opening	"O"	**ms**	20 ±20 %	20 ±20%	20…35	40…75
				Note: *The arcing time depends on the circuit switched by the poles. For all normal 3-phase applications, the arcing time is less than 10 ms. The load is isolated from the supply after a time equal to the sum of the opening time and the arcing time.*			
Time constant (L/R)			**ms**	28	34	75	25
Mechanical durability at Uc	In millions of operating cycles			30	10	10	8
Maximum operating rate at ambient temperature ⩽ 60 °C	In operating cycles per hour			3600	3600	3600	1200

Low consumption control circuit characteristics

Rated insulation voltage	Conforming to IEC 60947-1		**V**	690	–
	Conforming to UL, CSA		**V**	600	–
Maximum voltage	Of the control circuit on ⎓		**V**	250	–
Average consumption d.c. at 20 °C and at Uc	Wide range coil (0.7…1.25 Uc)	Inrush	**W**	2.4	–
		Sealed	**W**	2.4	–
Operating time (1) at Uc and at 20 °C	Closing	"C"	**ms**	77 ±15 %	–
	Opening	"O"	**ms**	25 ±20 %	–
Voltage limits (θ ⩽ 60 °C) of the control circuit	Operation			0.8 to 1.25 Uc	–
	Drop-out			0.1…0.3 Uc	–
Time constant (L/R)			**ms**	40	–
Mechanical durability	In millions of operating cycles			30	–
Maximum operating rate at ambient temperature ⩽ 60 °C	In operating cycles per hour			3600	–

(1) The operating times depend on the type of contactor electromagnet and its control mode.
The closing time "C" is measured from the moment the coil supply is switched on to initial contact of the main poles.
The opening time "O" is measured from the moment the coil supply is switched off to the moment the main poles separate.

TeSys D

Characteristics of auxiliary contacts incorporated in the contactor

Mechanically linked contacts	Conforming to IEC 60947-5-1			Each contactor has 2 N/O and N/C contacts mechanically linked on the same movable contact holder
Mirror contact	Conforming to IEC 60947-4-1			The N/C contact on each contactor represents the state of the power contacts and can be connected to a PREVENTA safety module
Rated operational voltage (Ue)	Up to		**V**	690
Rated insulation voltage (Ui)	Conforming to IEC 60947-1		**V**	690
	Conforming to UL, CSA		**V**	600
Conventional thermal current (Ith)	For ambient temperature ≤ 60 °C		**A**	10
Frequency of the operational current			**Hz**	25…400
Minimum switching capacity $\lambda = 10^{-8}$	U min		**V**	17
	I min		**mA**	5
Short-circuit protection	Conforming to IEC 60947-5-1			gG fuse: 10 A
Rated making capacity	Conforming to IEC 60947-5-1, I rms		**A**	∼: 140, ⎓: 250
Short-time rating	Permissible for	1 s	**A**	100
		500 ms	**A**	120
		100 ms	**A**	140
Insulation resistance			**MΩ**	> 10
Non-overlap time	Guaranteed between N/C and N/O contacts		**ms**	1.5 (on energisation and on de-energisation)

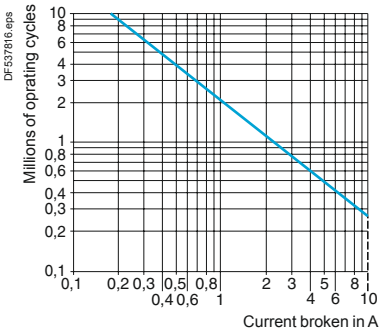

AC-15

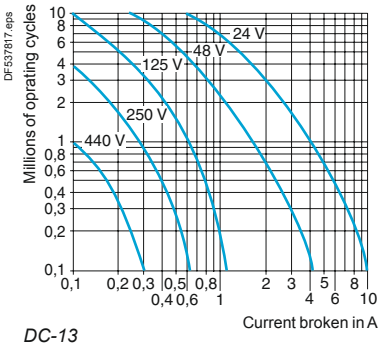

DC-13

Operational power of contacts conforming to IEC 60947-5-1

a.c. supply, categories AC-14 and AC-15

Electrical durability (valid for up to 3600 operating cycles/hour) on an inductive load such as the coil of an electromagnet: making current (cos φ 0.7) = 10 times the power broken (cos φ 0.4).

Operating cycles	V	24	48	115	230	400	440	600
1 million	**VA**	60	120	280	560	960	1050	1440
3 million	**VA**	16	32	80	160	280	300	420
10 million	**VA**	4	8	20	40	70	80	100

d.c. supply, category DC-13

Electrical durability (valid for up to 1200 operating cycles/hour) on an inductive load such as the coil of an electromagnet, without economy resistor, the time constant increasing with the load.

Operating cycles	V	24	48	125	250	440
1 million	**W**	96	76	76	76	44
3 million	**W**	48	38	38	32	–
10 million	**W**	14	12	12	–	–

TeSys contactors

Auxiliary contact blocks without dust and damp protected contacts for TeSys D contactors

Environment

Contact block type				LAD N or LAD C	LAD T and LAD S	LAD R	LAD 8
Conforming to standards				IEC 60947-5-1, NF C 63-140, VDE 0660, BS 4794, EN 60947-5-1			
Product certifications				UL, CSA			
Protective treatment	Conforming to IEC 60068			"TH"			
Degree of protection	Conforming to VDE 0106			Protection against direct finger contact IP 2X			
Ambient air temperature around the device	Storage		°C	-60…+80			
	Operation		°C	-5…+60			
	Permissible for operation at Uc		°C	-40…+70			
Maximum operating altitude	Without derating		m	3000			
Connection by cable	Phillips n° 2 and Ø6 mm Flexible or solid cable with or without cable end		mm²	Min: 1 x 1; max: 2 x 2.5			
Spring terminal connections	Flexible or solid cable without cable end		mm²	Max: 2 x 2.5			

Instantaneous and time delay contact characteristics

Number of contacts				1, 2 or 4	2	2	2
Rated operational voltage (Ue)	Up to		V	690			
Rated insulation voltage (Ui)	Conforming to IEC 60947-5-1		V	690			
	Conforming to UL, CSA		V	600			
Conventional thermal current (Ith)	For ambient temperature ≤ 60 °C		A	10			
Frequency of the operational current			Hz	25…400			
Minimum switching capacity		U min	V	17			
		I min	mA	5			
Short-circuit protection	Conforming to IEC 60947-5-1 and VDE 0660. gG fuse		A	10			
Rated making capacity	Conforming to IEC 60947-5-1	I rms	A	∿: 140; ⎓: 250			
Short-time rating	Permissible for	1 s	A	100			
		500 ms	A	120			
		100 ms	A	140			
Insulation resistance			MΩ	> 10			
Non-overlap time	Guaranteed between N/C and N/O contacts		ms	1.5 (on energisation and on de-energisation)			
Overlap time	Guaranteed between N/C and N/O contacts on LAD C22		ms	1.5	–	–	–
Time delay (LADT, R and S contact blocks) Accuracy only valid for setting range indicated on the front face	Ambient air temperature for operation		°C	–	-40…+70	-40…+70	–
	Repeat accuracy			–	±2 %	±2 %	–
	Drift up to 0.5 million operating cycles			–	+15 %	+15 %	–
	Drift depending on ambient air temperature			–	0.25 % per °C	0.25 % per °C	–
Mechanical durability	In millions of operating cycles			30	5	5	30
Operational power of contacts				See page B8/63			

Contactors

References: pages B8/15 and B8/16
Dimensions: pages B8/67 and B8/68
Schemes: pages B8/71 and B8/72

TeSys contactors

Auxiliary contact blocks without dust and damp protected contacts for TeSys D contactors

Environment

Contact block type				LA1 DX	LA1 DZ		LA1 DY
					Protected	Non protected	
Conforming to standards				IEC 60947-5-1, VDE 0660			
Product certifications				UL, CSA			
Protective treatment	Conforming to IEC 60068			"TH"			
Degree of protection	Conforming to VDE 0106			Protection against direct finger contact IP 2X			
Ambient air temperature	Storage and operation		°C	-25…+70			
Cabling	Phillips n° 2 and Ø6 mm Flexible or solid conductor with or without cable end		mm^2	Min: 1 x 1; max: 2 x 2.5			
Number of contacts				2	2	2	2

Contact characteristics

Rated operational voltage (Ue)	Up to		V	50	50	690	24
Rated insulation voltage (Ui)	Conforming to IEC 60947-5-1		V	250	250	690	250
	Conforming to UL, CSA		V	–	–	600	–
Conventional thermal current (Ith)	For ambient temperature ≤ 40 °C		A	–	–	10	–
Maximum operational current (Ie)			mA	500	500	–	50
Frequency of the operational current			Hz	–	–	25…400	–
Minimum switching capacity		U min	V	3	3	17	3
		I min	mA	0.3	0.3	5	0.3
Short-circuit protection	Conforming to IEC 609475-1 gG fuse		A	–	–	10	–
Rated making capacity	Conforming to IEC 609475-1	I rms	A	–	–	∼:140; ⎓: 250	–
Short-time rating	Permissible for	1 s	A	–	–	100	–
		500 ms	A	–	–	120	–
		100 ms	A	–	–	140	–
Insulation resistance			MΩ	> 10	> 10	> 10	> 10
Mechanical durability	In millions of operating cycles			5	5	30	5
Materials and technology used for dust and damp protected contacts				Silver - Single break	Silver - Single break	–	Gold - Single break with crossed bars

References:
pages B8/15 and B8/16

Dimensions:
pages B8/67 and B8/68

Schemes:
pages B8/71 and B8/72

TeSys contactors
Auxiliary contact blocks with dust and damp protected contacts for TeSys D contactors

Rated operational power of contacts (conforming to IEC 60947-5-1)

a.c. supply, categories AC-14 and AC-15

Electrical durability (valid for up to 3600 operating cycles/hour) on an inductive load such as the coil of an electromagnet: making current (cos φ 0.7) = 10 times the power broken (cos φ 0.4).

Operating cycles	V	24	48	115	230	400	440	600
1 million	VA	60	120	280	560	960	1050	1440
3 million	VA	16	32	80	160	280	300	420
10 million	VA	4	8	20	40	70	80	100

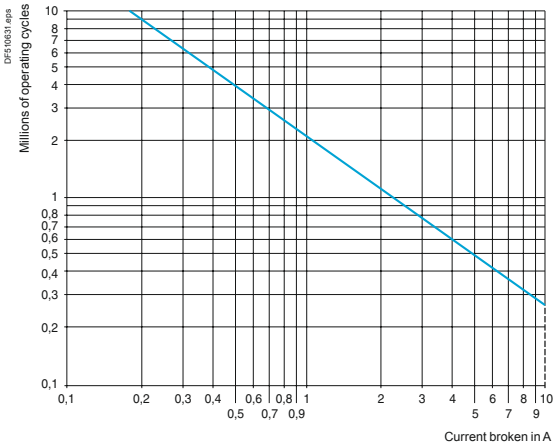

d.c. supply, category DC-13

Electrical durability (valid for up to 1200 operating cycles/hour) on an inductive load such as the coil of an electromagnet, without economy resistor, the time constant increasing with the load.

Ooperating cycles	V	24	48	125	250	440
1 million	W	120	90	75	68	61
3 million	W	70	50	38	33	28
10 million	W	25	18	14	12	10

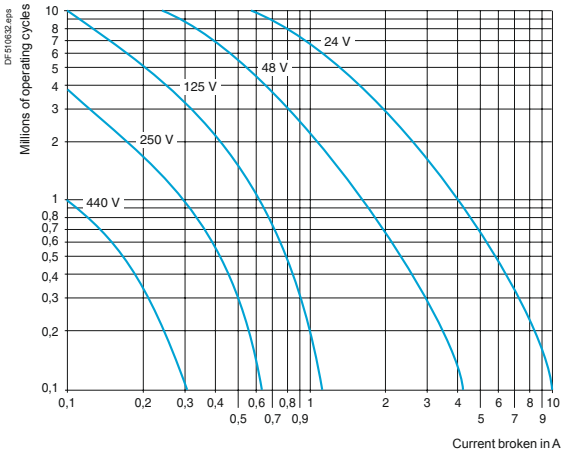

TeSys contactors

Control modules, coil suppressor modules and mechanical latch blocks for TeSys D contactors

Environment

Conforming to standards			IEC 60947-5-1
Product certifications			UL, CSA
Protective treatment	Conforming to IEC 60068		"TH"
Degree of protection	Conforming to VDE 0106		Protection against direct finger contact IP 2X
Ambient air temperature around the device	Storage	°C	-40…+80
	Operation	°C	-25…+55
	Permissible for operation at Uc	°C	-25…+70

Suppressor modules

Module type			LA4 DA, LAD 4RC, LAD 4RC3	LA4 DB, LAD 4T, LAD 4T3	LA4 DC, LAD 4D3	LA4 DE, LAD 4V, LAD 4V3
Type of protection			RC circuit	Bidirectional peak limiting diode	Diode	Varistor
Rated control circuit voltage (Uc)		V	∼ 24…415	∼ or ⎓ 24…440	⎓ 12…250	∼ or ⎓ 24…250
Maximum peak voltage			3 Uc	2 Uc	Uc	2 Uc
Natural RC frequency	24/48 V	Hz	400	–	–	–
	50/127 V	Hz	200	–	–	–
	110/240 V	Hz	100	–	–	–
	380/415 V	Hz	150	–	–	–

Mechanical latch blocks (1)

Mechanical latch block type				LAD 6K10	LA6 DK20
For use on contactor				LC1 D09…D65A DT20…DT80A	LC1 D80…D150 LP1 D80 and LC1 D115
Product certifications				UL, CSA	UL, CSA
Rated insulation voltage	Conforming to IEC 60947-5-1		V	690	690
Rated control circuit voltage	∼ 50/60 Hz and ⎓		V	24…415	24…415
Power required	For unlatching	∼	VA	25	25
		⎓	W	30	30
Maximum operating rate	In operating cycles/hour			1200	1200
On-load factor				10 %	10 %
Mechanical durability at Uc	In millions of operating cycles			0.5	0.5

(1) Unlatching can be manually operated or electrically controlled (pulsed).
*The **LA6 DK** or **LAD 6K** latch coil and the **LC1 D** operating coil must not be energised simultaneously.*
*The duration of the **LA6 DK** or **LAD 6K** and **LC1 D** control signals must be ⩾ 100 ms.*

References:
pages B8/15 and B8/16

Dimensions:
pages B8/67 and B8/68

Schemes:
pages B8/71 and B8/72

TeSys contactors
Electronic serial timer module for TeSys D contactors

TeSys D

Environment			
Module type			**LA4 DT** (On-delay)
Conforming to standards			IEC 60255-5
Product certifications			UL, CSA
Protective treatment	Conforming to IEC 60068		"TH"
Degree of protection	Conforming to VDE 0106		Protection against direct finger contact IP 2X
Ambient air temperature around the device	Storage	**°C**	-40…+80
	Operation	**°C**	-25…+55
	For operation at Uc	**°C**	-25…+70
Rated insulation voltage (Ui)	Conforming to IEC 60947-1	**V**	250
Cabling	Phillips n° 2 and Ø6 mm Flexible or solid conductor with or without cable end	**mm²**	Min: 1 x 1; max: 2 x 2.5
Control circuit characteristics			
Built-in protection	Of the input		By varistor
	Contactor coil suppression		By varistor
Rated control circuit voltage (Uc)		**V**	∿ or ⎓: 24…250
Permissible variation			0.8…1.1 Uc
Type of control			By mechanical contact only
Timing characteristics			
Timing ranges		**s**	0.1…2; 1.5…30; 25…500
Repeat accuracy	0…40 °C		±3 % (10 ms minimum)
Reset time	During time delay period	**ms**	150
	After time delay period	**ms**	50
Immunity to microbreaks	During time delay period	**ms**	10
	After time delay period	**ms**	2
Minimum control pulse duration		**ms**	–
Time delay signalling	By LED		Illuminates during time delay period
Switching characteristics (solid state type)			
Maximum power dissipated		**W**	2
Leakage current		**mA**	< 5
Residual voltage		**V**	3.3
Overvoltage protection			3 kV; 0.5 joule
Electrical durability	In millions of operating cycles		30

Function diagram

Electronic on-delay timer LA4 DT

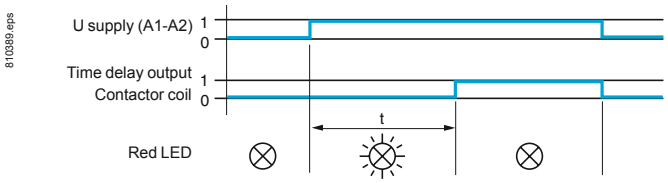

References: page B8/19
Dimensions: pages B8/67 and B8/68
Schemes: pages B8/71 and B8/72

TeSys contactors
Interface modules for TeSys D contactors

TeSys D

Environment

Conforming to standards				IEC 60255-5
Product certifications				UL, CSA
Protective treatment	Conforming to IEC 60068			"TH"
Degree of protection	Conforming to VDE 0106			Protection against direct finger contact IP 2X
Ambient air temperature around the device	Storage		°C	-40…+80
	Operation		°C	-25…+55
	Permissible for operation at Uc		°C	-25…+70

Other characteristics

Module type				LA4 DFB With relay	LA4 DWB Solid state
Conventional thermal current (Ith)	For ambient temperature ≤ 50 °C		A	8	
Rated insulation voltage	Conforming to IEC 60947-5-1		V	250	
Rated operational voltage	Conforming to IEC 60947-5-1		V	250	
Indication of input state				By integral LED which illuminates when the contactor coil is energised	
Input signals	Control voltage (E1-E2)		V	⎓ 24	⎓ 24
	Permissible variation		V	17…30	5…30
	Current consumption at 20 °C		mA	25	8.5 for 5 V 15 for 24 V
	State "0" guaranteed for	U	V	< 2.4	< 2.4
		I	mA	< 2	< 2
	State "1" guaranteed for	U	V	17	5
Built-in protection	Against reversed polarity			By diode	By diode
	Of the input			By diode	By diode
Electrical durability at 220 A/240 V	In millions of operating cycles			10	20
Maximum immunity to microbreaks			ms	4	1
Power dissipated	At 20 °C		W	0.6	0.4
Direct mounting on contactor	With coil	∿ 24…250 V		**LC1 D80…D150**	–
		∿ 100…250 V		–	**LC1 D80…D115**
		∿ 380…415 V		–	–
Mounting with cabling adapter LAD 4BB	With coil	∿ 24…250 V		**LC1 D09…D38, LC1 DT20…DT40**	**LC1 D09…D38, LC1 DT20…DT40**
		∿ 380…415 V		–	–
Mounting with cabling adapter LAD 4BB3	With coil	∿ 24…250 V		**LC1 D40A…D65A**	**LC1 D40A…D65A**
		∿ 380…415 V		**LC1 D40A…D65A**	**LC1 D40A…D65A**

Total operating time at Uc (of the contactor)

The operating times depend on the type of contactor electromagnet and its control mode. The closing time "C" is measured from the moment the coil supply is switched on to initial contact of the main poles. The opening time "O" is measured from the moment the coil supply is switched off to the moment the main poles separate.

				LC1 D09…D38, LC1 DT20…DT40	LC1 D40A…D65A	LC1 D80 and D95
With **LA4 DFB**		"C"	ms	20…30	28…34	28…43
		"O"	ms	16…24	20…24	18…32

Cabling	Phillips n° 2 and Ø6 mm Flexible or solid cable with or without cable end	mm²	Min: 1 x 1; max: 2 x 2.5

References: page B8/19
Dimensions: pages B8/67 and B8/68
Schemes: pages B8/71 and B8/72

TeSys contactors

TeSys D contactors

Control circuit: a.c.

TeSys D

LC1 D09…D18 (3-pole)

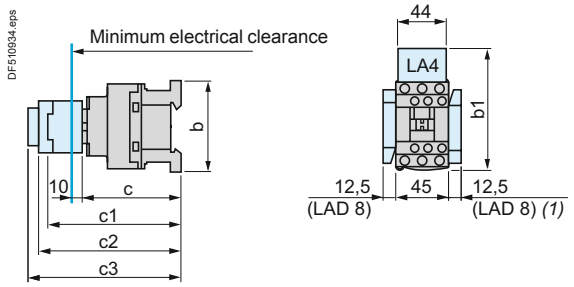

LC1 D25…D38 (3-pole), LC1 DT20…DT40 (4-pole)

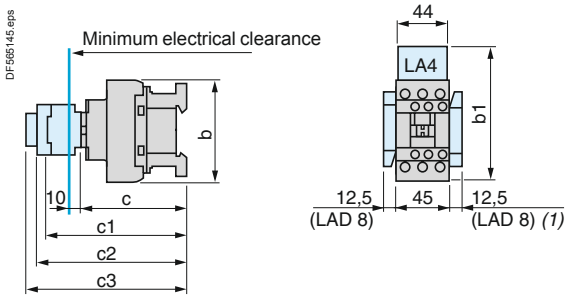

LC1		D09…D18	D093… D123	D099… D129	D25… D38	D183… D323	D098, D128, DT20 and DT25	DT203 and DT253	DT32 and DT40	D188, D258, DT323 and DT403
b	without add-on blocks	77	99	80	85	99	85	99	91	105
b1	with LAD 4BB	94	107	95,5	98	107	98	–	–	–
	with LA4 D●2	110 (1)	123 (1)	111.5 (1)	114 (1)	123 (1)	114	–	–	–
	with LA4 DF, DT	119 (1)	132 (1)	120.5 (1)	123 (1)	132 (1)	129	–	–	–
	with LA4 DW, DL	126 (1)	139 (1)	127.5 (1)	130 (1)	139 (1)	190	–	–	–
c	without cover or add-on blocks	84	84	84	90	90	90	90	97	97
	with cover, without add-on blocks	86	86	86	92	92	92	92	99	99
c1	with LAD N or C (2 or 4 contacts)	117	117	117	123	123	123	123	131	131
c2	with LA6 DK10, LAD 6K10	129	129	129	135	135	135	135	143	143
c3	with LAD T, R, S	137	137	137	143	143	143	143	151	151
	with LAD T, R, S and sealing cover	141	141	141	147	147	147	147	155	155

(1) Including LAD 4BB.

LC1 D40A…D65A (3-pole), LC1 DT60A…DT80A (4-pole)

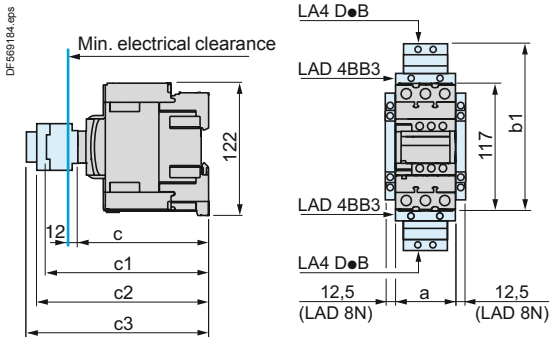

LC1 D80 and D95 (3-pole), LC1 D80004 and D80008 (4-pole), D40008 and D65008 (4-pole)

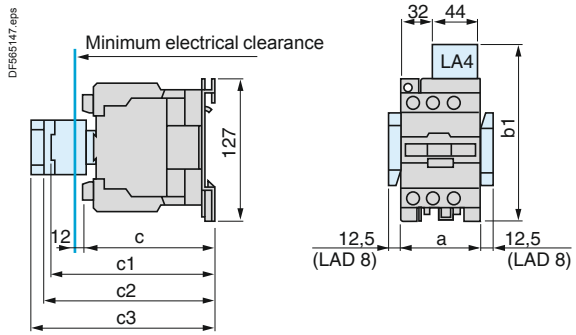

LC1		D40A…D65A	DT60A…DT80A	D40008	D80	D95, D65008	D80004	D80008
a		55	70	85	85	85	96	96
b1	with LA4 D●2	–	–	135	135	135	135	135
	with LA4 DB3 or LAD 4BB3	136	–	–	135	–	–	–
	with LA4 DF, DT	157	–	142	142	142	142	142
	with LA4 DM, DW, DL	166	–	150	150	150	150	150
c	without cover or add-on blocks	118	118	125	125	125	125	140
	with cover, without add-on blocks	120	120	–	130	130	–	–
c1	with LAD N (1 contact)	–	–	139	150	150	150	150
	with LAD N or C (2 or 4 contacts)	150	150	147	158	158	158	158
c2	with LAD 6K10 or LA6 DK	163	163	159	170	170	170	170
c3	with LAD T, R, S	171	171	167	178	178	178	178
	with LAD T, R, S and sealing cover	175	175	171	182	182	182	182

LC1 D115 and D150 (3-pole), LC1 D115004 (4-pole)

LC1		D115, D150	D115004	D1150046
a		120	150	155
b1	with LA4 DA2	174	174	174
	with LA4 DF, DT	185	185	185
	with LA4 DM, DL	188	188	188
	with LA4 DW	188	188	188
c	without cover or add-on blocks	132	132	115
	with cover, without add-on blocks	136	–	–
c1	with LAD N or C (2 or 4 contacts)	150	150	150
c2	with LA6 DK20	155	155	155
c3	with LAD T, R, S	168	168	168
	with LAD T, R, S and sealing cover	172	172	172

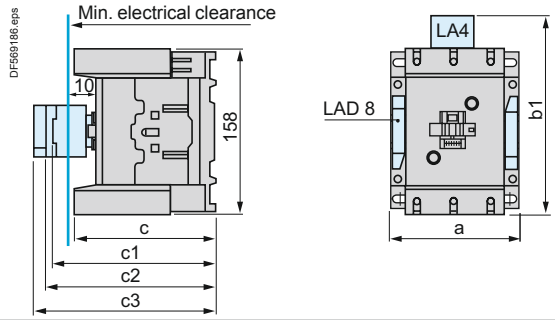

TeSys contactors

TeSys D contactors

Control circuit: d.c. or low consumption

TeSys D

LC1 D09…D18 (3-pole)

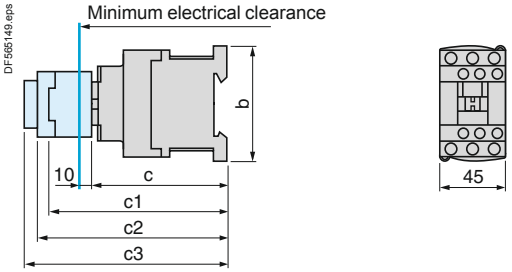

LC1 D25…D38 (3-pole)

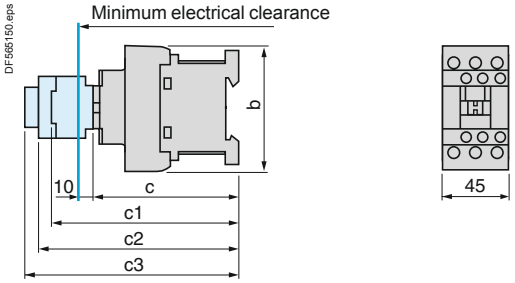

LC1		D09…D18	D093…D123	D099…D129	D25…D38	D183…D323
b		77	99	80	85	99
c	without cover or add-on blocks	93	93	93	99	99
	with cover, without add-on blocks	95	95	95	101	101
c1	with LAD N or C (2 or 4 contacts)	126	126	126	132	132
c2	with LA6 DK10	138	138	138	144	144
c3	with LAD T, R, S	146	146	146	152	152
	with LAD T, R, S and sealing cover	150	150	150	156	156

LC1 DT20…DT40 (4-pole)

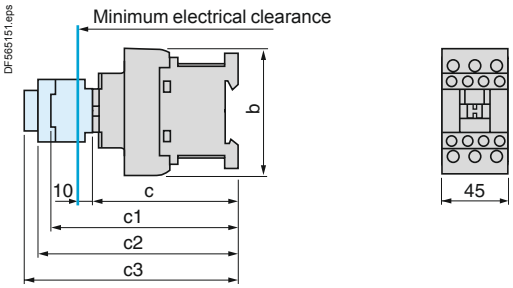

LC1		DT20 and DT25 D098 and D128	DT203 and DT253 D0983 and D1283	DT32 and DT40 D188…D258	DT323 and DT403 D1883 and D2583
b		85	99	91	105
c	with cover	99	99	107	107
c1	with LAD N or C (2 or 4 contacts)	123	123	131	131
c2	with LA6 DK10	135	135	143	143
c3	with LAD T, R, S	143	143	151	151
	with LAD T, R, S and sealing cover	147	147	155	155

LC1 D40A…D65A (3-pole), LC1 DT60A…DT80A (4-pole)

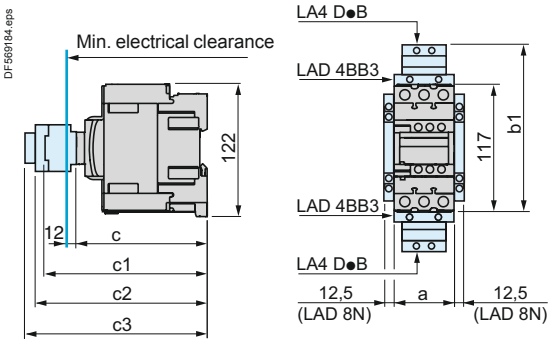

LC1 D80 and D95 (3-pole), LP1 D80004, LP1 D80008 (4-pole), LP1 D40008 and D65008 (4-pole)

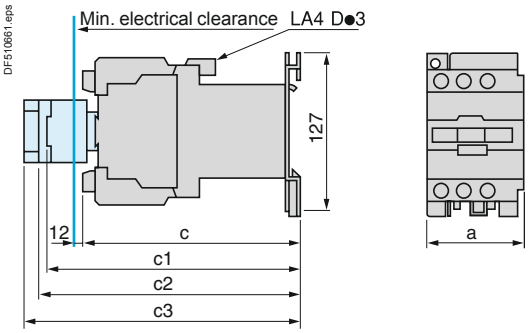

		LC1 D40A … D65A	LC1 DT60A…DT80A	LP1 D40008 and D65008	LC1 D80 and D95	LP1 D80004	LP1 D80008
a		55	72	85	85	96	96
b1	with LAD 4BB3	136	136	–	–	–	–
	with LA4 DF, DT	157	157	–	–	–	–
c	without cover or add-on blocks	118	118	182	181	181	196
	with cover, without add-on blocks	120	120	–	186	–	–
c1	with LAD N (1 contact)	–	–	196	204	204	204
	with LAD N or C (2 or 4 contacts)	150	150	202	210	210	210
c2	with LA6 DK10	163	163	213	221	221	221
c3	with LAD T, R, S	171	171	221	229	229	229
	with LAD T, R, S and sealing cover	175	175	225	233	233	233

LC1 D115●●● and LC1 D150●●● with ⎓ coil: see page B8/67.

TeSys contactors
TeSys D contactors

TeSys D

LC1 D09…D38, DT20…DT40

On mounting rail AM1 DP200, DR200 or AM1 DE200 (width 35 mm)

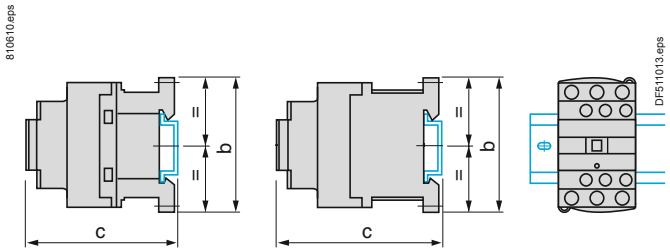

Control circuit: a.c.

LC1	D09… D18	D25… D38	DT20 and DT25	DT32 and DT40
b	77	85	85	100
c (AM1 DP200 or DR200) (1)	88	94	94	109
c (AM1 DE200) (1)	96	102	102	117

Control circuit: d.c.

LC1	D09… D18	D25… D38	DT20 and DT25	DT32 and DT40
b	77	85	94	109
c (AM1 DP200 or DR200) (1)	97	103	103	118
c (AM1 DE200) (1)	105	110	111	1236

(1) With safety cover.

LC1 D40A…D65A, LC1 DT60A and DT80A, LC1 D80 and D95, LC1 D40008 and D65008

On mounting rail AM1 DL200 or DL201 (width 75 mm) (2)
On mounting rail AM1 ED●●● or AM1 DE200 (width 35 mm)

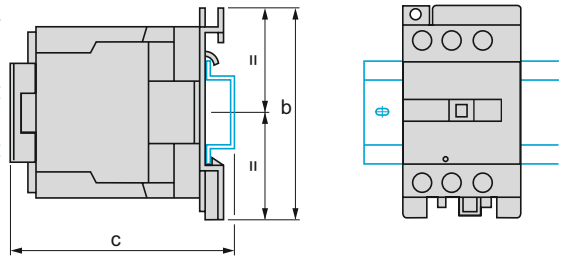

Control circuit: a.c.

LC1	D40A…D65A DT60A…DT80A	D80 and D95	D40008 and D65008
b	122	127	127
c (AM1 DL200) (1)	–	147	143
c (AM1 DL201) (1)	–	137	133
c (AM1 ED●●● or DE200) (1)	128	137	133

Control circuit: d.c.

LC1	D40A…D65A DT60A…DT80A	D80 and D95	D40008 and D65008
c (AM1 DL200) (1)	–	205	200
c (AM1 DL201) (1)	–	195	190
c (AM1 ED●●● or DE200) (1)	128	–	190

(1) With safety cover.
(2) Except for LC1 D40A…D65A, LC1 DT60A and DT80A.

LC1 D80 and D95, LP1 D80

On 2 mounting rails DZ5 MB on 120 mm centres

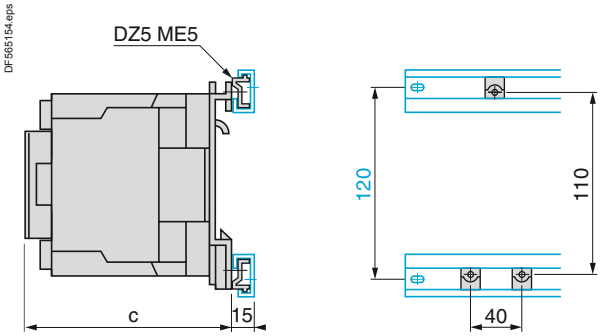

Control circuit: a.c.

LC1	D80 and D95
c with cover	130

Control circuit: d.c.

LC1	D80 and D95
c with cover	186

LP1	D80
c	181

LC1 D115, D150

On 2 mounting rails DZ5 MB on 120 mm centres

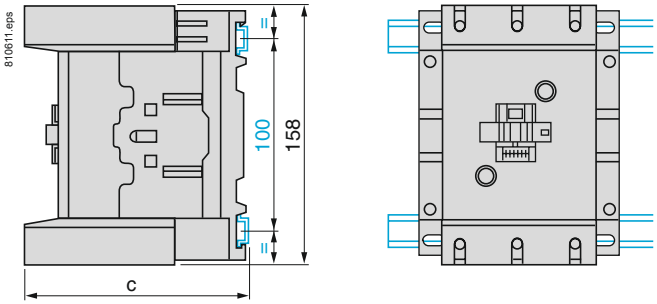

Control circuit: a.c. or d.c.

LC1	D115 and D150	D1156 and D1506
c (AM1 DP200 or DR200)	134.5	117.5
c (AM1 DE200 or ED●●●)	142.5	125.5

Contactors

TeSys contactors
TeSys D contactors

TeSys D

LC1 D09…D38 and LC1 DT20…DT40
On 2 mounting rails DZ5 MB

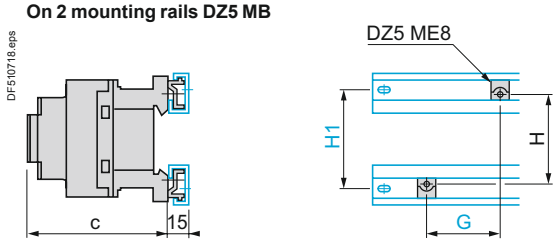

Control circuit:	a.c.		d.c.	
LC1	**D09…D18**	**D25…D38**	**D09…D18**	**D25…D38**
c with cover	86	92	95	101
G	**35**	**35**	**35**	**35**
H	60	60	70	70
H1	**70**	**70**	**70**	**70**
4-pole contactors				
LC1	**DT20 and DT25**	**DT32 and DT40**	**DT20 and DT25**	**DT32 and DT40**
c	92	100	101	109
G	**35**	**35**	**35**	**35**
H	60	60	70	70
H1	**70**	**70**	**70**	**70**

LC1 D09…D38 and LC1 DT20…DT40
On pre-slotted mounting plate AM1 PA, PB, PC

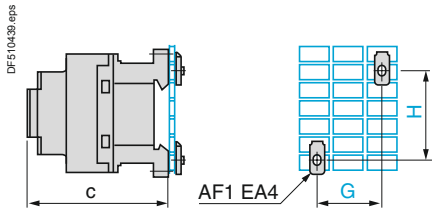

Control circuit:	a.c		d.c	
LC1	**D09…D18**	**D25…D38**	**D09…D18**	**D25…D38**
c with cover	86	92	95	101
G	**35**	**35**	**35**	**35**
H	60/70	60/70	70	70
LC1	**DT20 and DT25**	**DT32 and DT40**	**DT20 and DT25**	**DT32 and DT40**
c with cover	80	93	118	132
G	**35**	**35**	**35**	**35**
H	60	60	70	70

LC1 D40A…D65A, LC1 DT60A…DT80A
On pre-slotted mounting plate AM1 PA, PB, PC and panel mounted

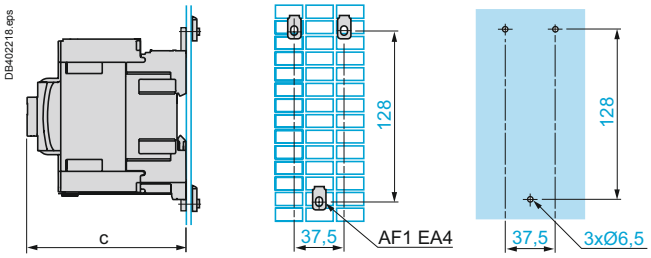

Control circuit:	a.c	d.c.
LC1	**D40A…65A, DT60A…DT80A**	**D40A…65A, DT60A…DT80A**
c with cover	120	120

LC1 D09…D38, LC1 DT20…DT40
Panel mounted

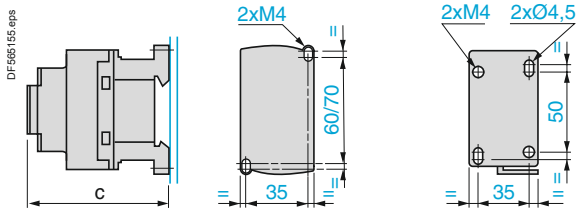

Control circuit:	a.c		d.c	
LC1	**D09…D18**	**D25…D38**	**D09…D18**	**D25…D38**
c with cover	86	92	95	101
4-pole contactors				
LC1	**DT20 and DT25**	**DT32 and DT40**	**DT20 and DT25**	**DT32 and DT40**
c with cover	90	98	90	98

LC1 D80 and D95, LC1 D40008 and D65008, LP1 D80
On pre-slotted mounting plate AM1 PA, PB, PC and panel mounted

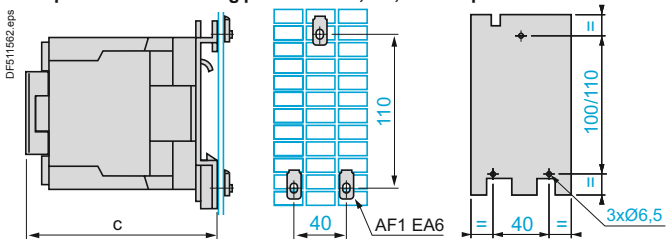

Control circuit:	a.c		d.c.
LC1	**D80 and D95, D40008 and D65008**		**D80 and D95 D40008 and D65008**
c with cover	130		186
LP1	–	–	**D80**
c without cover	–	–	181

LC1 D115, D150
Panel mounted

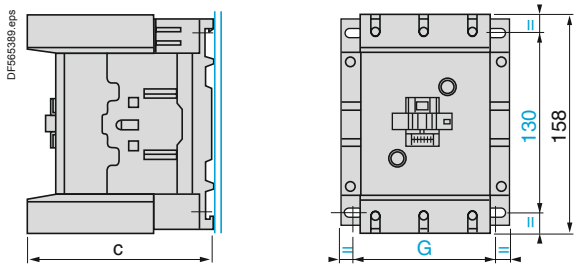

LC1	D115	D1156	D150	D1506
c	132	115	132	115
G (3-pole)	**96/110**	**96/110**	**96/110**	**96/110**
G (4-pole)	**130/144**	**130/144**	**–**	**–**

Selection: pages A6/23 to A6/47
Characteristics: pages B8/55 to B8/60
References: pages B8/2 to B8/5
Schemes: pages B8/71 to B8/72

TeSys D

Contactors

3-pole contactors (References: pages B8/2 to B8/5)

LC1 D09 to D150

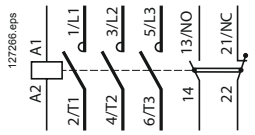

4-pole contactors (References: pages B8/6 and B8/7)

LC1 DT20 to DT80A

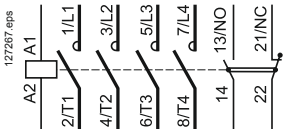

LC1 D115004

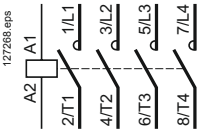

LC1 D098 to D258

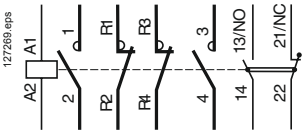

LC1 and LP1 D40008 to D80008

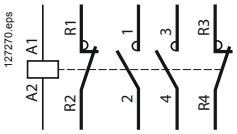

Front mounting add-on contact blocks

Instantaneous auxiliary contacts (References: page B8/43)

1 N/O LAD N10 (1)

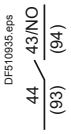

1 N/C LAD N01 (1)

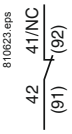

1 N/O + 1 N/C LAD N11

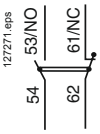

2 N/O LAD N20

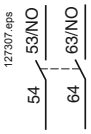

2 N/C LAD N02

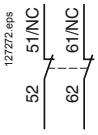

2 N/O + 2 N/C LAD N22

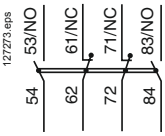

1 N/O + 3 N/C LAD N13

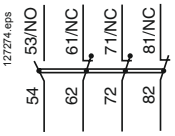

4 N/O LAD N40

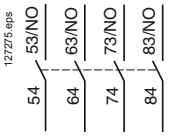

4 N/C LAD N04

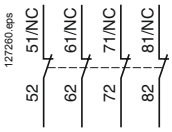

2 N/O + 2 N/C including 1 N/O + 1 N/C make before break LAD C22

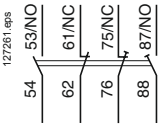

3 N/O + 1 N/C LAD N31

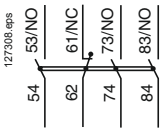

Instantaneous auxiliary contacts conforming to standard EN 50012 (References: page B8/43)

1 N/O + 1 N/C LAD N11G

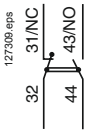

1 N/O + 1 N/C LAD N11P

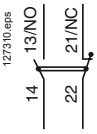

2 N/O + 2 N/C LAD N22G

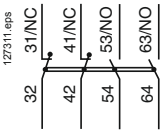

2 N/O + 2 N/C LAD N22P

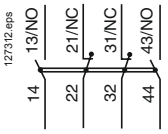

3 N/O + 1 N/C LAD N31G

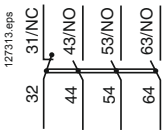

3 N/O + 1 N/C LADN31P

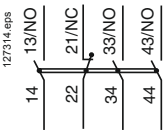

1 N/O + 3 N/C LAD N13G

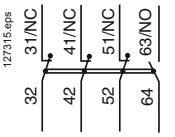

1 N/O + 3 N/C LAD N13P

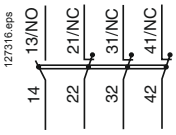

(1) Items in brackets refer to blocks mounted on right-hand side of contactor.

TeSys contactors
TeSys D contactors

TeSys D

Front mounting add-on contact blocks

Dust and damp protected instantaneous auxiliary contacts (References: page B8/43)

2 N/O (24-50 V) LA1 DX20	2 N/C (24-50 V) LA1 DX02	2 N/O (5-24 V) LA1 DY20	2 N/O protected (24-50 V) 2 N/O standard LA1 DZ40	2 N/O protected (24-50 V) + 1 N/O + 1 N/C standard LA1 DZ31

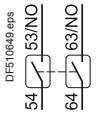

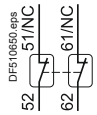

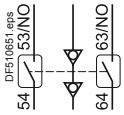

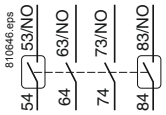

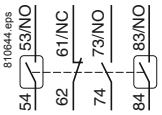

Time delay auxiliary contacts (References: page B8/16)

On-delay 1 N/O + 1 N/C LAD T	Off-delay 1 N/O + 1 N/C LAD R	On-delay 1 N/C + 1 N/O break before make LAD S

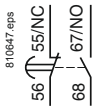

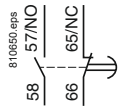

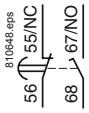

Mechanical latch blocks (References: page B8/16)

LAD 6K10 and LA6 DK20

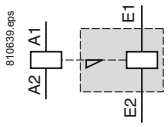

Side mounting add-on contact blocks

Instantaneous auxiliary contacts (References: page B8/43)

1 N/O + 1 N/C LAD 8N11 (1)	2 N/O LAD 8N20 (1)	2 N/O LAD 8N02 (1)

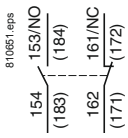



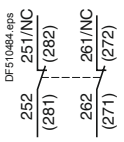

(1) Items in brackets refer to blocks mounted on right-hand side of contactor.

Electronic serial timer modules

On-delay LA4 DT•U

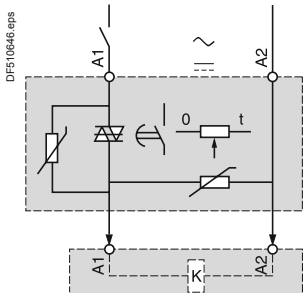

Interface modules

Relay output

LA4 DFB

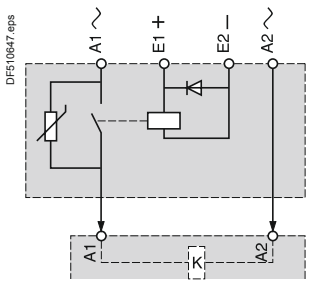

Solid state

LA4 DWB

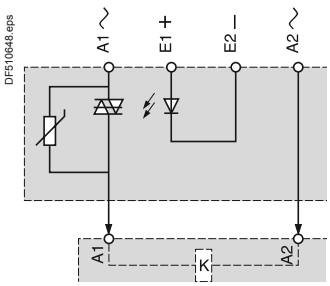

References: page B8/85.

TeSys contactors
TeSys D reversing contactors

TeSys D

LC2 D09 to D38
2 x **LC1 D09 to D38**

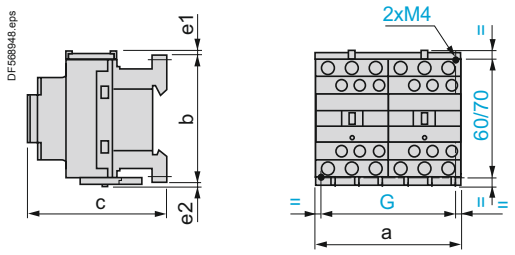

LC2 or 2 x LC1	a	b	c (1)	e1	e2	G
D09 to D18 ∼	90	77	86	4	1.5	80
D093 to D123 ∼	90	99	86	–	–	80
D09 to D18 ⎓	90	77	95	4	1.5	80
D093 to D123 ⎓	90	99	95	–	–	80
D25 to D38 ∼	90	85	92	9	5	80
D183 to D383 ∼	90	99	92	–	–	80
D25 to D32 ⎓	90	85	101	9	5	80
D183 to D383 ⎓	90	99	101	–	–	80

e1 and e2: including cabling.

(1) With safety cover, without add-on block.

LC2 DT20 to DT40
2 x **LC1 DT20 to DT40**

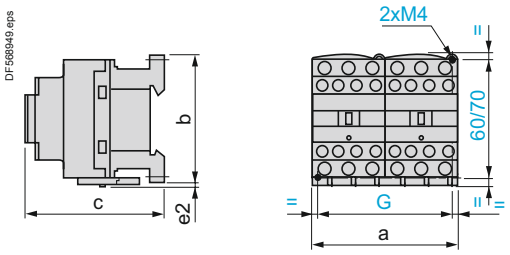

LC2 or 2 x LC1	a	b	c	G
DT20 and DT25 ∼	90	85	92	80
DT32 and DT40 ∼	90	91	99	80
DT20 and DT25 ⎓	90	85	102	80
DT32 and DT40 ⎓	90	91	109	80

c, e: including cabling.

LC2 D40A to D65A
2 x **LC1 D40A to D65A**

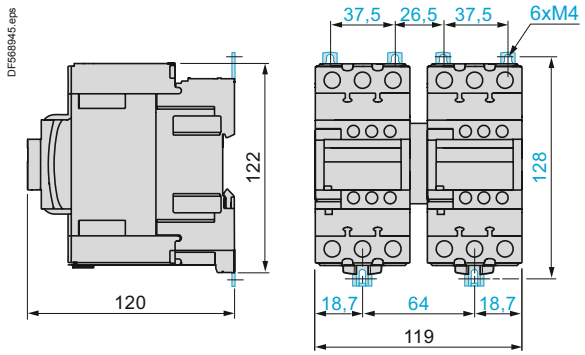

Contactors

TeSys contactors
TeSys D reversing contactors

TeSys D

LC2 D80 and D95

2 x **LC1 D80 and D95** ∼

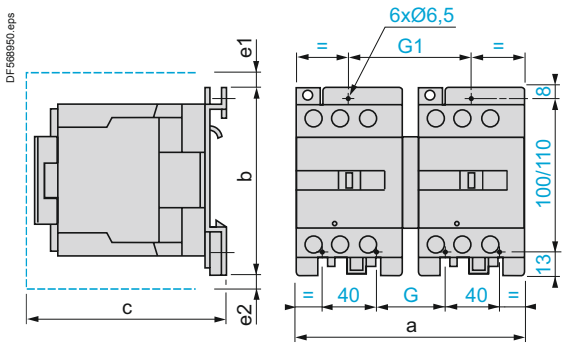

LC2 or 2 x LC1	a	b	c	e1	e2	G	G1
D80 and D95 ∼	182	127	158	13	–	57	96
D80004 ∼	207	127	158	–	20	71	111

c, e1 and e2: including cabling.

2 x **LC1 D80 and D95** ⎓

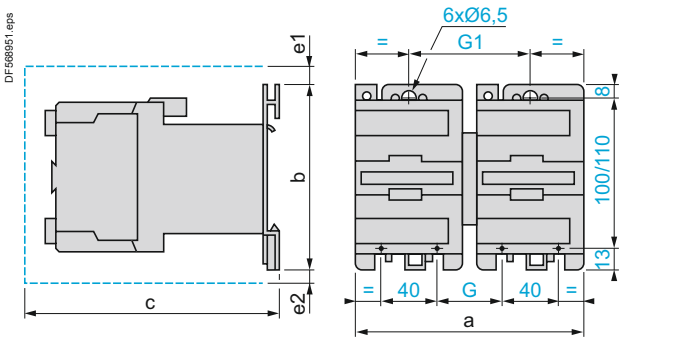

2 x LC1	a	b	c	e1	e2	G	G1
D80 and D95	207	127	215	13	20	96	111

c, e1 and e2: including cabling.

LC2 D115 and D150

2 x **LC1 D115 and D150**

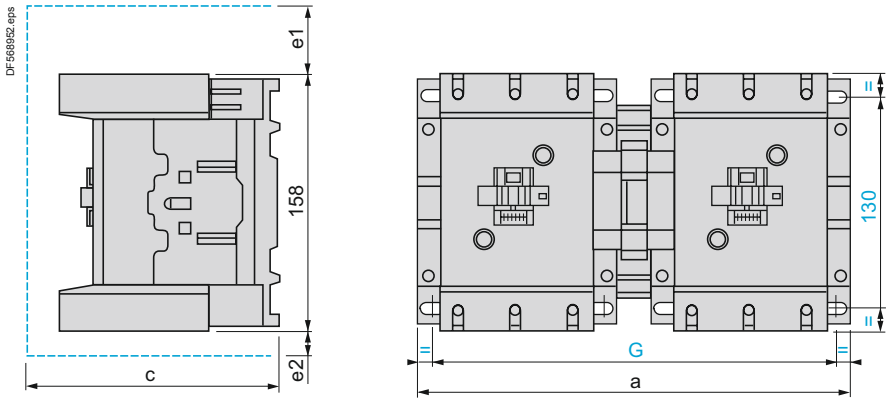

LC2 or 2 x LC1	a	c	e1	e2	G
D115 and D150	266	148	56	18	242/256
D115004	334	148	–	60	310/324

c, e1 and e2: including cabling.

TeSys contactors
TeSys D reversing contactors

TeSys D

Reversing contactors for motor control

LC2 D09…D150

Horizontally mounted

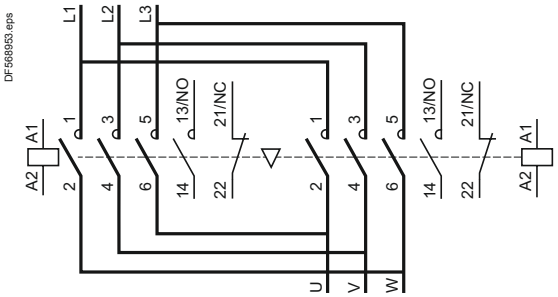

LAD 9R1V

With integral electrical interlocking

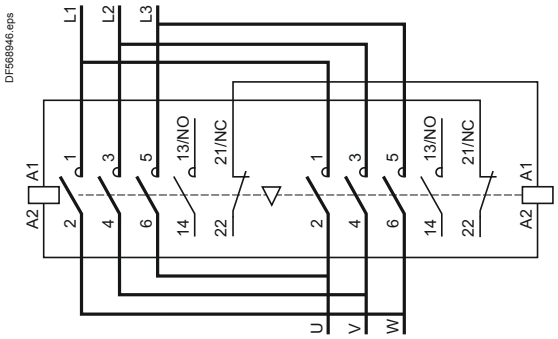

Changeover contactor pairs

LC2 DT20…DT40

Horizontally mounted

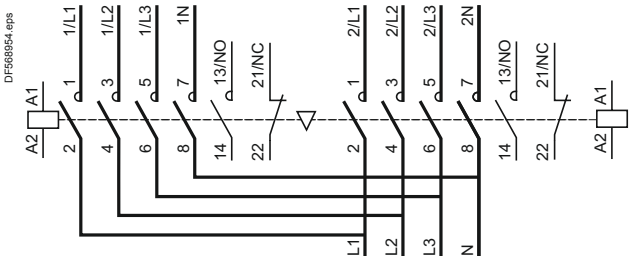

LAD T9R1V

With integral electrical interlocking

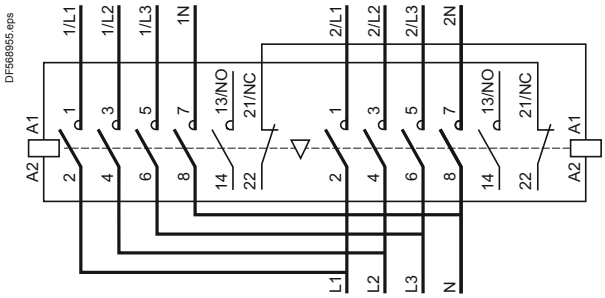

TeSys contactors
TeSys D reversing contactors

TeSys D

Electrical interlocking of reversing contactors fitted with:

Mechanical interlock with integral electrical contacts
LA9 D4002, LA9 D8002 and LA9 D11502

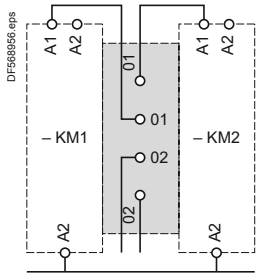

Mechanical interlock without integral electrical contacts
LAD 9V2, LAD 4CM, LA9 D50978 and LA9 D80978

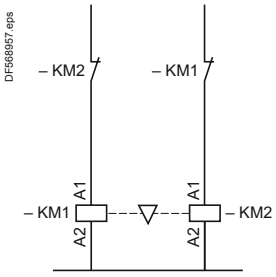

Low speed - High speed cabling kit, screw clamp terminals

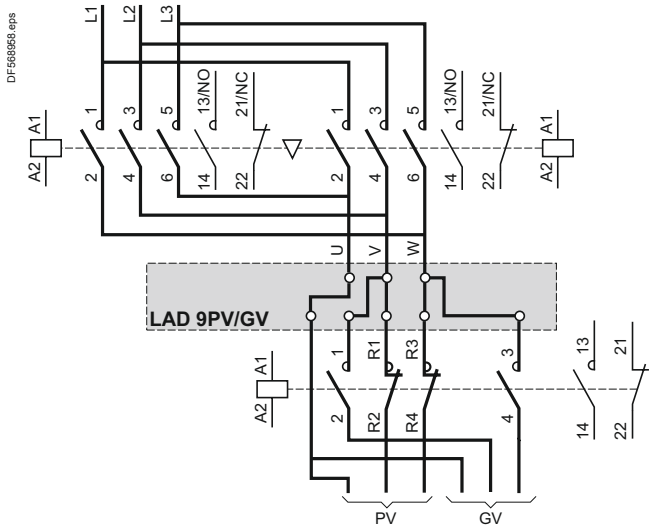

Low speed - High speed cabling kit, spring terminals

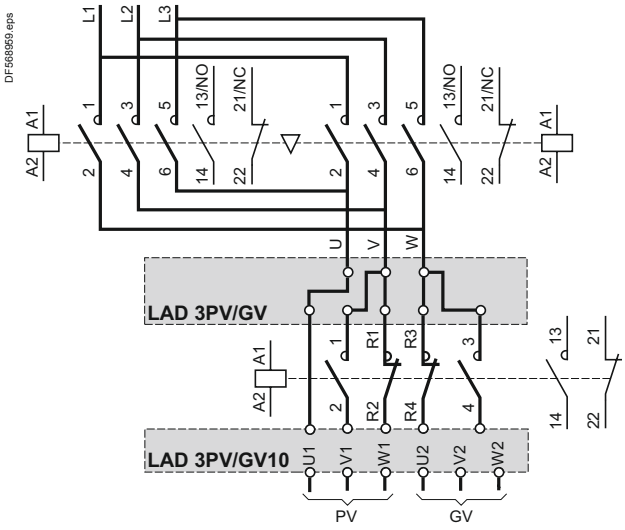

TeSys contactors

For switching 3-phase capacitor banks, used for power factor correction

TeSys D

Dimensions

LC1 DFK

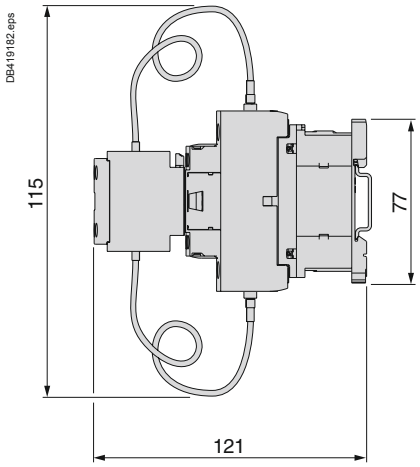

LC1 DGK, DLK, DMK

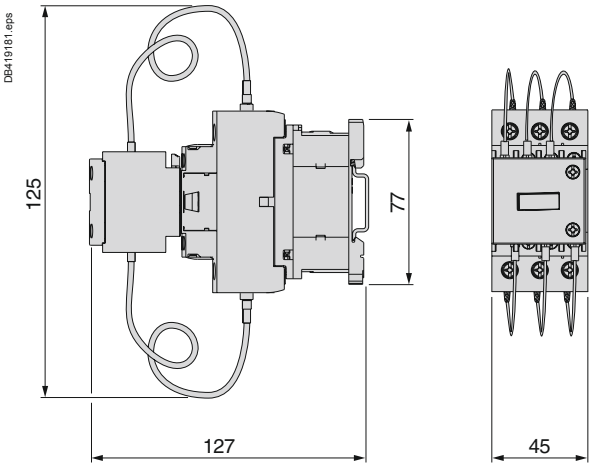

LC1 DPK, DTK

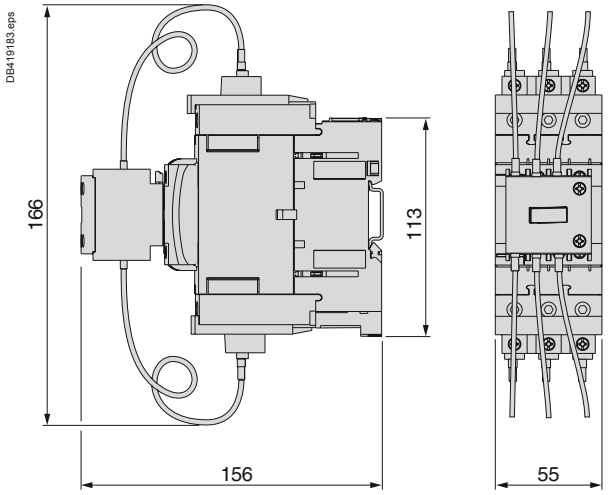

LC1 DWK

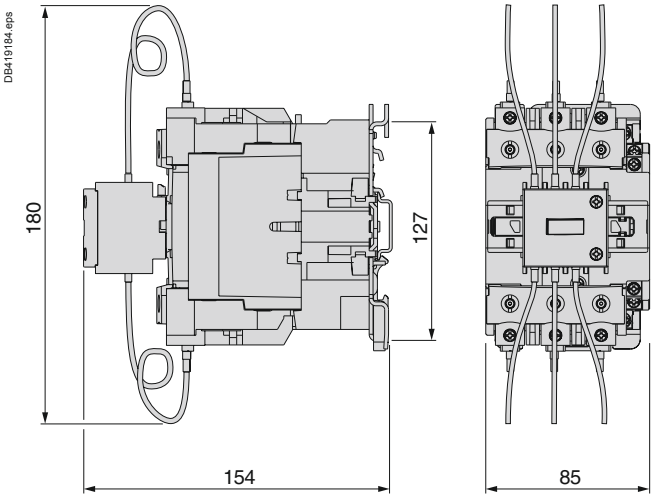

Schemes

LC1 D●K

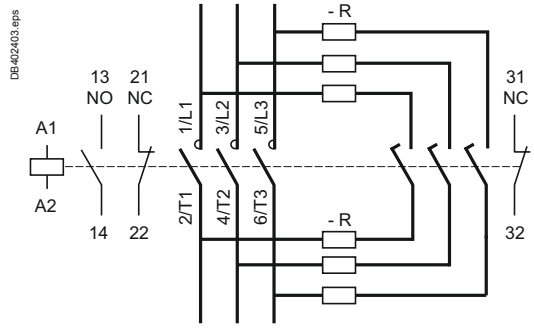

R = Pre-wired resistor connections.

References:
page B8/13

TeSys contactors
Mini-contactors TeSys LC1 SK and LP1 SK

TeSys SK

Environment

Rated insulation voltage (Ui)	Conforming to 60947, VDE 0110 gr C,BS 5424, CSA 22-2 n° 14, UL 508	**V**	690	
Conforming to standards			IEC 60947, NF C 63-110, VDE 0660, BS 5424	
Approvals			UL, CSA	
Protective treatment	Conforming to IEC 60068 (DIN 50015)		"TC" (Klimafest, Climateproof)	
Degree of protection	Conforming to VDE 0106		Protection against direct finger contact	
Ambient air temperature around the device	Storage	**°C**	-50…+70	
	Operation	**°C**	-20…+50	
Maximum operating altitude	Without derating	**m**	2000	
Operating position			**Vertical axis**	**Horizontal axis**
			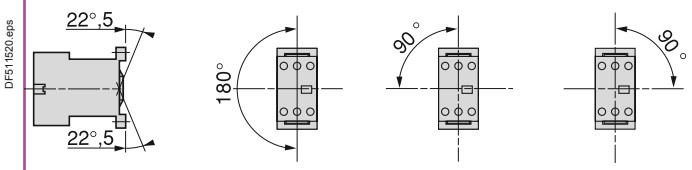	
			Without derating	Without derating
Cabling, screw clamp terminals			Min	Max
	Solid conductor	**mm²**	1 x 1.5 or 2 x 1.5	1 x 6 or 2 x 4
	Flexible cable without cable end	**mm²**	1 x 0.5 or 2 x 0.35	1 x 6 or 2 x 2.5
	Flexible cable with cable end	**mm²**	1 x 0.35 or 2 x 0.35	1 x 6 or 2 x 1.5
Tightening torque	Pozidriv n° 1 head	**N.m**	0.8	
Terminal referencing			Conforming to standards En 50005	

References: pages B8/31 and B8/32
Dimensions: page B8/82
Schemes: page B8/82

TeSys contactors
Mini-contactors TeSys LC1 SK and LP1 SK

TeSys SK

Pole characteristics			
Conventional thermal current (Ith)	For ambient temperature ≤ 55 °C	**A**	12
Rated operational frequency		**Hz**	50/60
Frequency limits of the operational current		**Hz**	Up to 400
Rated operational voltage (Ue)		**V**	690
Rated making capacity	I rms conforming to NF C 63-110 and IEC 60947	**A**	66
Rated breaking capacity (for Ue ≤ 400 V)	Conforming to NF C 63-110 and IEC 60947 (I rms)	**A**	52
Short time rating	In free air for a time "t" from cold state (θ ≤ 55 °C)	**A**	50
Short-circuit protection	gl fuse U ≤ 440 V	**A**	16
Average impedance per pole	At Ith and 50 Hz	**mΩ**	4
Maximum rated operational current			
For a temperature ≤ 55 °C	AC-3 (1) (Ue ≤ 400 V)	**A**	6
	AC-1	**A**	12
Utilisation in category AC-1 resistive circuits, heating, lighting (Ue ≤ 440 V)	Increase in operational current by paralleling of poles	**A**	20
Auxiliary contact characteristics of add-on blocks			
Rated operational voltage (Ue)	Up to	**V**	690
Rated insulation voltage (Ui)	Conforming to IEC 60947, BS 5424, VDE 0110 group C, CSA C 22-2 n° 14	**V**	690
Conventional thermal current (Ith)	For ambiant temperature ≤ 55 °C	**A**	10
Frequency of operational current		**Hz**	Up to 400
Short-circuit protection	Conforming to IEC 60947 and VDE 0660, gl fuse	**A**	10

Operational power of contacts conforming to IEC 60947

a.c. supply, category AC-15

Electrical durability (valid up to 3600 operating cycles per hour) on an inductive load such as the coil of an electromagnet: making current (cos φ 0.7) = 10 times the breaking current (cos φ 0.4).

	V	24	48	110/127	220/230	380/400	440
1 million operating cycles	**VA**	48	96	240	440	800	880
3 million operating cycles	**VA**	17	34	86	158	288	317
10 million operating cycles	**VA**	7	14	36	66	120	132
Occasional making capacity	**VA**	1000	2050	5000	10000	14000	13000

d.c. supply, category DC-13

Electrical durability (valid up to 1200 operating cycles per hour) on an inductive load such as the coil of an electromagnet, without economy resistor, the time constant increasing with the load.

	V	24	48	110	220	440	440
1 million operating cycles	**W**	120	80	60	52	51	880
3 million operating cycles	**W**	55	38	30	28	26	317
10 million operating cycles	**W**	15	11	9	8	7	132
Occasional making capacity	**W**	720	600	400	300	230	13000

(1) For LC1 contactors.

References: pages B8/31 and B8/32
Dimensions: page B8/82
Schemes: page B8/82

TeSys contactors
Mini-contactors TeSys LC1 SK and LP1 SK

TeSys SK

Control circuit characteristics

Type			LC1 SK06	LP1 SK06
Rated control circuit voltage (Uc)		V	∼ 24…400	⎓ 12…72
Control voltage limits ($\theta \leq 50$ °C)	For operation		0.85…1.1 Uc	0.85…1.1 Uc
	For drop-out		⩾ 0.20 Uc	⩾ 0.10 Uc
Average coil consumption at 20 °C and at Uc	Inrush		16 VA	2.2 W
	Sealed		4.2 VA	2.2 W
Heat dissipation		W	1.4	2.2
Operating time at 20 °C and at Uc				
Between coil energisation and	opening of the N/C contacts	ms	8…16	10…18
	closing of the N/O contacts	ms	7…14	8…12
Between coil de-energisation and	opening of the N/O contacts	ms	6…8	4…6
	closing of the N/C contacts	ms	8…10	6…8
Maximum operating rate	In operating cycles per hour		1200	1200
Mechanical durability at Uc In millions of operating cycles	50/60 Hz coil		10	–
	⎓ coil		–	10

References: pages B8/31 and B8/32
Dimensions: page B8/82
Schemes: page B8/82

TeSys contactors
Mini-contactors TeSys LC1 SK and LP1 SK

Use in category AC-3 (Ue ⩽ 440 V)

Control of 3-phase asynchronous squirrel cage motors with breaking whilst running.
The current broken (Ic) in category AC-3 is equal to the rated operational current (Ie) of the motor.

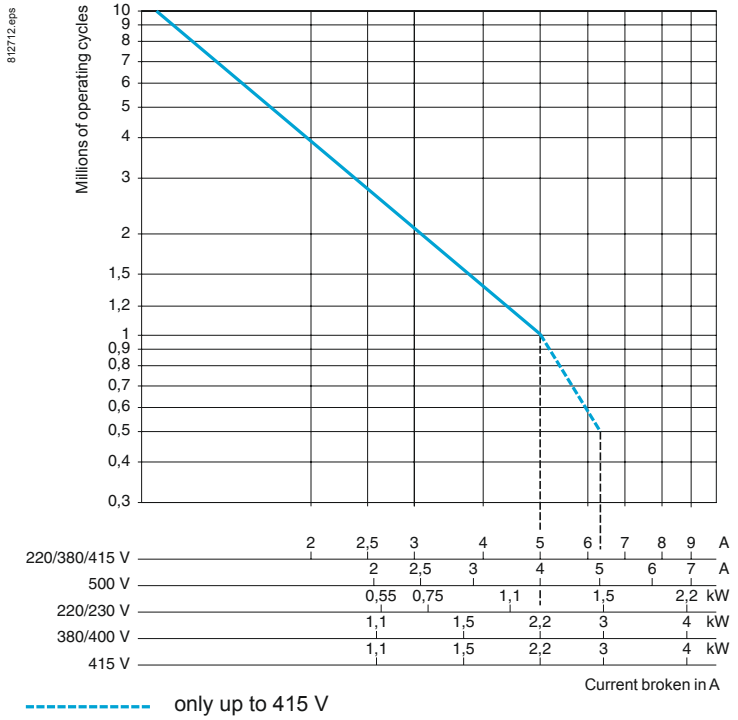

only up to 415 V

Use in category AC-1 (Ue ⩽ 440 V)

Control of resistive circuits (cos φ ⩾ 0.95).
The current broken (Ic) in category AC-1 is equal to the current (Ie) normally drawn by the load.

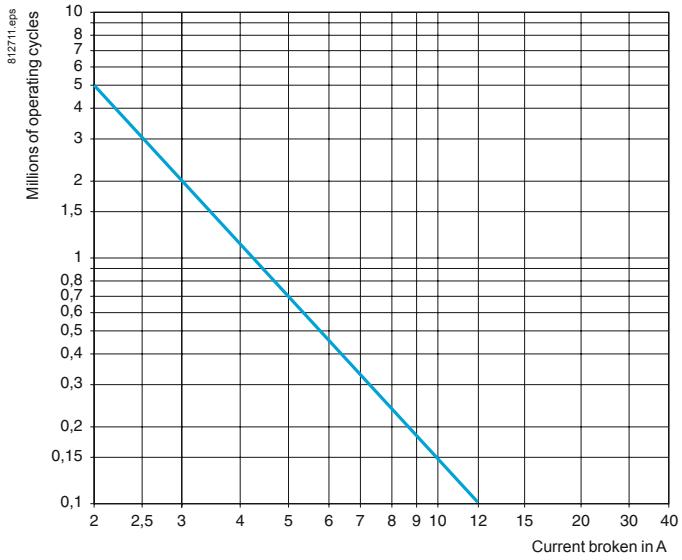

Contactors

TeSys contactors

Mini-contactors TeSys LC1 SK and LP1 SK

Dimensions

Mini-contactors

LC1 and LP1 SK06

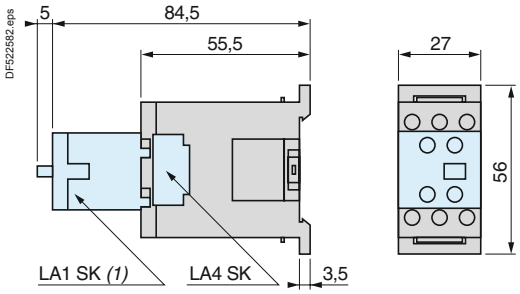

(1) Only on LC1 SK06.

Mounting

Mini-contactors

LC1 and LP1 SK06

On mounting rail AM1 DP200 or AM1 DE200 (ـب 35 mm)

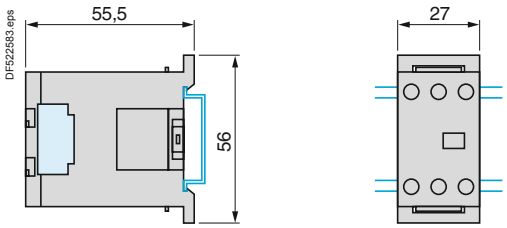

Schemes

2-pole mini-contactors

LC1 and LP1 SK06

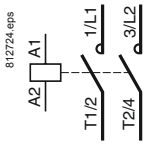

Add-on power pole block

1 pole + 1 “N/O” aux.	1 pole + 1 “N/C” aux.
LA1 SK10	**LA1 SK01**



Instantaneous auxiliary contacts

2 “N/O”	2 “N/C”	1 “N/O” + 1 “N/C”
LA1 SK20	**LA1 SK02**	**LA1 SK11**

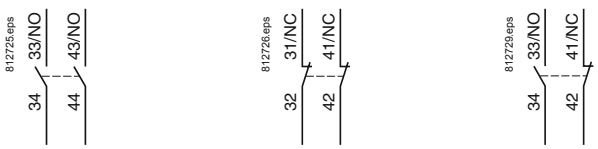

Characteristics: pages B8/78 to B8/81

References: pages B8/31 and B8/32

Environment characteristics

Conforming to standards			IEC 60947, NF C 63-110, VDE 0660, BS 5424		
Product certifications	LC● and LP● K06 to K12		UL, CSA		
Operating positions			Vertical axis / Horizontal axis 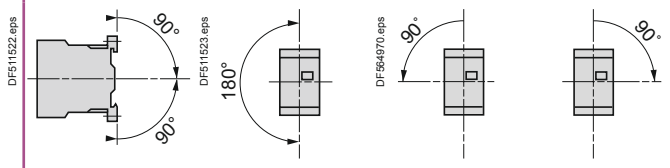 *Without derating* *Without derating* *Possible positions for* **LC● K** *only. Contactor pull-in voltage: 0.85 Uc*		
Connection			**Min.**	**Max.**	**Max. to IEC 60947**
	Screw clamp terminals — Solid conductor	**mm²**	1 x 1.5	2 x 4	1 x 4 + 1 x 2.5
	Screw clamp terminals — Flexible conductor without cable end	**mm²**	1 x 0.75	2 x 4	2 x 2.5
	Screw clamp terminals — Flexible conductor with cable end	**mm²**	1 x 0.34	1 x 1.5 + 1 x 2.5	1 x 1.5 + 1 x 2.5
	Spring terminals — Solid conductor	**mm²**	1 x 0.75	1 x 1.5	2 x 1.5
	Spring terminals — Flexible conductor without cable end	**mm²**	1 x 0.75	1 x 1.5	2 x 1.5
	Faston connectors — Clip	**mm**	2 x 2.8 or 1 x 6.35		
	Solder pins for printed circuit board — With locating device between power and control circuits		4 mm x 35 microns		
Tightening torque	of screw-clamp terminals only Philips head n° 2 and Ø6	**N.m**	0.8		
Terminal referencing	Conforming to standards EN 50005 and EN 50012		Up to 5 contacts, depending on model		
Rated insulation voltage (Ui)	Conforming to IEC 60947	**V**	690		
	Conforming to VDE 0110 gr C	**V**	750		
	Conforming to BS 5424, NF C 20-040	**V**	690		
	Conforming to CSA 22-2 n° 14, UL 508	**V**	600		
Rated impulse withstand voltage (Uimp)		**kV**	8		
Protective treatment	Conforming to IEC 60068 (DIN 50016)		"TC" (Klimafest, Climateproof)		
Degree of protection	Conforming to VDE 0106		Protection against direct finger contact		
Ambient air temperature around the device	Storage	**°C**	-50…+80		
	Operation	**°C**	-25…+50		
Maximum operating altitude	Without derating	**m**	2000		
Vibration resistance 5 ... 300 Hz	Contactor open		2 gn		
	Contactor closed		4 gn		
Flame resistance	Conforming to UL 94		Self-extinguishing materials V1		
	Conforming to NF F 16-101 and 16-102		Conforming to requirement 2		
Shock resistance (1/2 sine wave, 11 ms)	Contactor open		On X axis: 6 gn On Y and Z axes: 10 gn		
	Contactor closed		On X axis: 10 gn On Y and Z axes: 15 gn		
Safe separation of circuits	Conforming to VDE 0106 and IEC 60536		SELV (Safety Extra Low Voltage), up to 400 V		

Contactors

References: pages B8/33 to B8/40
Dimensions: pages B8/87 and B8/89
Schemes: pages B8/88 and B8/90

TeSys contactors

TeSys K contactors and reversing contactors

TeSys K

Pole characteristics

Type		LC● or LP●		K06	K09	K12	K16
Conventional thermal current (Ith)	For ambient temperature ≤ 50 °C		A	20			
Rated operational frequency			Hz	50/60			
Frequency limits of the operational current			Hz	Up to 400			
Rated operational voltage (Ue)			V	690			
Rated making capacity	I rms conforming to NF C 63 110 and IEC 60947		A	110	110	144	160
Rated breaking capacity	I rms conforming to NF C 63 110 and IEC 60947	220/230 V	A	110	110	–	–
		380/400 V	A	110	110	–	–
		415 V	A	110	110	–	–
		440 V	A	110	110	110	110
		500 V	A	80	80	80	80
		660/690 V	A	70	70	70	70
Permissible short time rating	In free air for a time "t" from cold state (θ ≤ 50 °C)	1 s	A	90	90	115	115
		5 s	A	85	85	105	105
		10 s	A	80	80	100	100
		30 s	A	60	60	75	75
		1 min	A	45	45	55	55
		3 min	A	40	40	50	50
		≥ 15 min	A	20	20	25	25
Short-circuit protection	gG fuse U ≤ 440 V (aM fuse, see page 22009/2)		A	25			
Average impedance per pole	At Ith and 50 Hz		mΩ	3			
Use in category AC-1 resistive circuits, heating, lighting (Ue ≤ 440 V)	Maximum rated operational current for a temperature ≤ 50 °C		A	20			
	Maximum rated operational current for a temperature ≤ 70 °C		A	16 for Ue only			
	Rated operational current limits in relation to the on-load factor and operating frequency			On-load factor		90 %	60 % 30 %
			A	300 operating cycles/hour		13	15 18
			A	120 operating cycles/hour		15	18 19
			A	30 operating cycles/hour		19	20 20
	Increase in rated operational current by paralleling of poles			Apply the following coefficients to the above currents; these coefficients take into account an often unbalanced distribution of current between the poles			
				2 poles in parallel: K = 1.60			
				3 poles in parallel: K = 2.25			
				4 poles in parallel: K = 2.80			
Use in category AC-3 squirrel cage motors	Operational power according to the voltage. Voltage 50 or 60 Hz	115 V single-ph.	kW	0.37	0.55	–	–
		220 V single-ph.	kW	0.75	1.1	–	–
		220/230 V 3-ph.	kW	1.5	2.2	3	4
		380/415 V 3-ph.	kW	2.2	4	5.5	7.5
		440/480 V 3-ph.	kW	3	4	5.5/4 (480)	5.5/4 (480)
		500/600 V 3-ph.	kW	3	4	4	4
		660/690 V 3-ph.	kW	3	4	4	4
	Maximum operating rate (in operating cycles/hour in relation to % of rated power)			Op. cycles/h		600	900 1200
				Power		100 %	75 % 50 %

References: pages B8/33 to B8/40
Dimensions: pages B8/87 and B8/89
Schemes: pages B8/88 and B8/90

TeSys contactors

TeSys K contactors and reversing contactors

TeSys K

Control circuit characteristics

Type			LC1	LC2	LC7	LC8	LP1	LP2	LP4	LP5
Rated control circuit voltage (Uc)		V	∼ 12…690 (1)		∼ 24…240 (1)		⎓ 12…250 (1)		⎓ 12…120	
Control voltage limits (≤ 50 °C) single voltage coil	Operation		0.8…1.15 Uc (2)		0.85…1.1 Uc		0.8…1.15 Uc		0.7…1.30 Uc	
	Drop-out		≥ 0.20 Uc		≥ 0.10 Uc		≥ 0.10 Uc		≥ 0.10 Uc	
Average consumption at 20 °C and at Uc	Inrush		30 VA		3 VA		3 W		1.8 W	
	Sealed		4.5 VA		3 VA		3 W		1.8 W	
Heat dissipation		W	1.3		3		3		1.8	
Operating time at 20 °C and at Uc										
Between coil energisation and:	- opening of the N/C contacts	ms	5…15		25…35		25…35		25…35	
	- closing of the N/O contacts	ms	10…20		30…40		30…40		30…40	
Between coil de-energisation and:	- opening of the N/O contacts	ms	10…20		30		10		10…20	
	- closing of the N/C contacts	ms	15…25		40		15		15…25	
Maximum immunity to microbreaks		ms	2		2		2		2	
Maximum operating rate	In operating cycles per hour		3600		3600		3600		3600	
Mechanical durability at Uc In millions of operating cycles	50/60 Hz coil		10	5	10	5	–	–	–	–
	⎓ coil		–	–	–	–	10	5	–	–
	Wide range coil, Low consumption		–	–	–	–	–	–	30	5

(1) For mains supplies with a high level of interference (voltage surge > 800 V), use a suppressor module LA4 KE1FC (50…129 V) or LA4 KE1UG (130…250 V), see page B8/44.
(2) LC1 K16: 0.85…1.15 Uc.

References:
pages B8/33 to B8/40

Dimensions:
pages B8/87 and B8/89

Schemes:
pages B8/88 and B8/90

TeSys contactors

TeSys K contactors and reversing contactors

TeSys K

Auxiliary contact characteristics of contactors and instantaneous contact blocks

Number of auxiliary contacts	On LC● K or LP● K 3-pole			1
	On LA1 K			2 or 4
Rated operational voltage (Ue)	Up to		**V**	690
Rated insulation voltage (Ui)	Conforming to BS 5424		**V**	690
	Conforming to IEC 60947		**V**	690
	Conforming to VDE 0110 group C		**V**	750
	Conforming to CSA C 22-2 n° 14		**V**	600
Conventional thermal current (Ith)	For ambient temperature ≤ 50 °C		**A**	10
Frequency of the operational current			**Hz**	Up to 400
Minimum switching capacity	U min (DIN 19 240)		**V**	17
	I min		**mA**	5
Short-circuit protection	Conforming to IEC 60947 and VDE 0660, gG fuse		**A**	10
Rated making capacity	Conforming to IEC 60947	I rms	**A**	110
Short-time rating	Permissible for	1 s	**A**	80
		500 ms	**A**	90
		100 ms	**A**	110
Insulation resistance			**MΩ**	> 10
Non-overlap distance	LA1 K: linked contacts conforming to INRS, BIA and CNA specifications		**mm**	0.5 (see schemes pages B8/88 and B8/90)

Power broken in VA

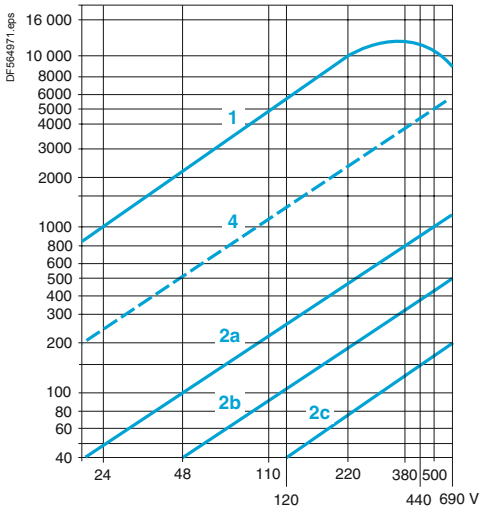

Power broken in W

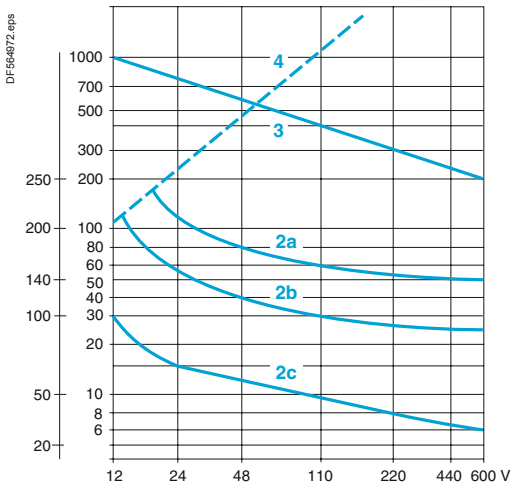

Operational power of contacts conforming to IEC 60947

a.c. supply, category AC-15

Electrical durability (valid for up to 3600 operating cycles/hour) on an inductive load such as the coil of an electromagnet: making current (cos φ 0.7) = 10 times the power broken (cos φ 0.4).

Operating cycles	V	24	48	110/ 127	220/ 230	380/ 400	440	600/ 690
1 million operating cycles	**VA**	48	96	240	440	800	880	1200
3 million operating cycles	**VA**	17	34	86	158	288	317	500
10 million operating cycles	**VA**	7	14	36	66	120	132	200
Occasional making capacity	**VA**	1000	2050	5000	10000	14000	13000	9000

d.c. supply, category DC-13

Electrical durability (valid for up to 1200 operating cycles/hour) on an inductive load such as the coil of an electromagnet, without economy resistor, the time constant increasing with the load.

Operating cycles	V	24	48	110	220	440	600
1 million operating cycles	**W**	120	80	60	52	51	50
3 million operating cycles	**W**	55	38	30	28	26	25
10 million operating cycles	**W**	15	11	9	8	7	6
Occasional making capacity	**W**	720	600	400	300	230	200

1. Breaking limit of contacts valid for:
   - maximum of 50 operating cycles at 10 s intervals (power broken = making current x cos φ 0.7).
2. Electrical durability of contacts for:
   - 1 million operating cycles (2a)
   - 3 million operating cycles (2b)
   - 10 million operating cycles (2c).
3. Breaking limit of contacts valid for:
   - maximum of 20 operating cycles at 10 s intervals with current passing for 0.5 s per operating cycle.
4. Thermal limit.

References: pages B8/33 to B8/40
Dimensions: pages B8/87 and B8/89
Schemes: pages B8/88 and B8/90

TeSys K

Contactors

LC1 K, LC7 K, LP1 K, LP4 K

On panel

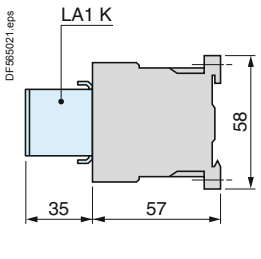

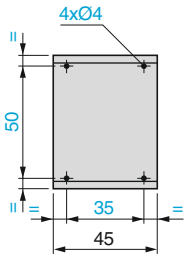

On mounting rail AM1 DP200 or AM1 DE200 (ـــ 35 mm)

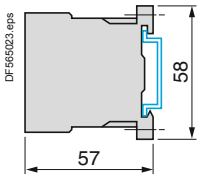

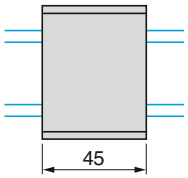

LA9 D973

On one asymmetrical rail DZ5 MB with clip-on mounting plates

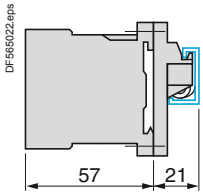

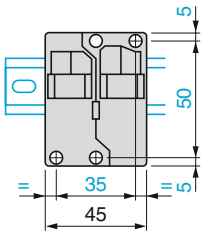

DX1 AP25

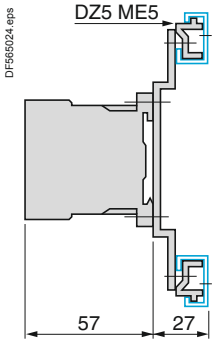

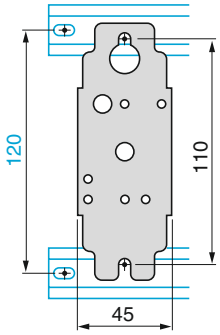

On printed circuit board

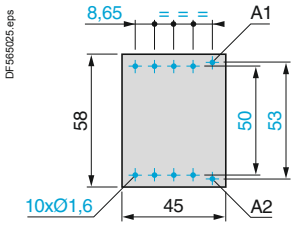

Electronic time delay contact blocks

LA2 KT

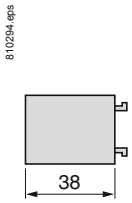

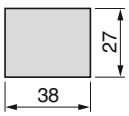

On contactor

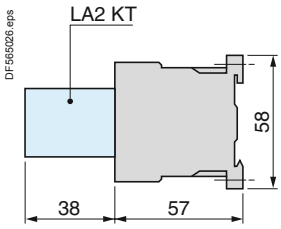

Suppressor modules

LA4 K●

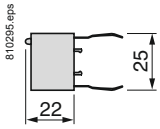



On contactor LC1 K or LP1 K

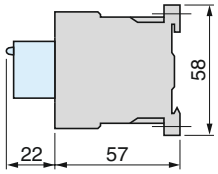

Characteristics:
pages B8/83 to B8/86

References:
pages B8/33 to B8/36

Schemes:
page B8/88

TeSys contactors
TeSys K reversing contactors

TeSys K

3-pole contactors

3 P + N/O

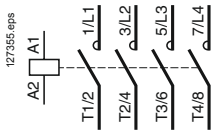

3 P + N/C

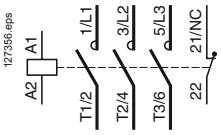

With integral suppression device

LC7 K

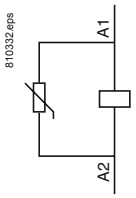

LP4 K

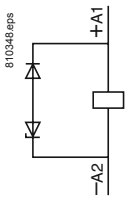

4-pole contactors

4 P

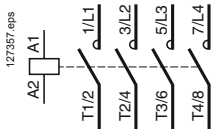

2 P N/O + 2 P N/C

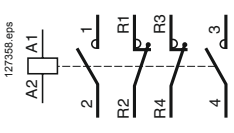

With integral suppression device

LC7 K

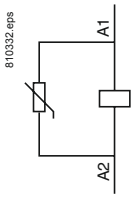

LP4 K

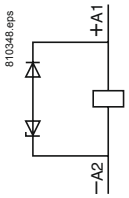

Instantaneous auxiliary contacts LA1 K

LA1 KN20, KN207, KN203

2 N/O

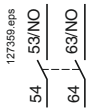

LA1 KN02, KN027, KN023

2 N/C

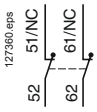

LA1 KN11, KN117, KN113

1 N/O + 1 N/C

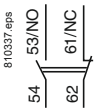

LA1 KN40, KN407, KN403

4 N/O



LA1 KN31, KN317, KN313

3 N/O + 1 N/C

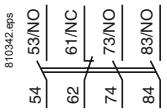

LA1 KN22, KN227, KN223

2 N/O + 2 N/C

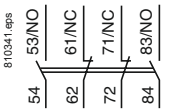

LA1 KN13, KN137, KN133

1 N/O + 3 N/C

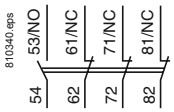

LA1 KN04, KN047, KN043

4 N/C

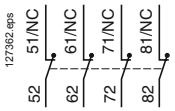

Terminal referencing conforming to standard EN 50012

LA1 KN02M

2 N/C

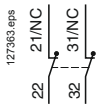

LA1 KN11M

1 N/O + 1 N/C

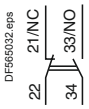

LA1 KN31M

3 N/O + 1 N/C

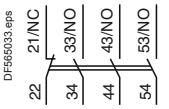

LA1 KN22M

2 N/O + 2 N/C

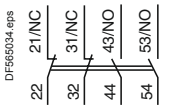

LA1 KN13M

1 N/O + 3 N/C

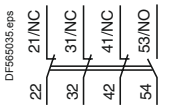

LA1 KN11P

1 N/O + 1 N/C

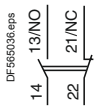

LA1 KN22P

2 N/O + 2 N/C

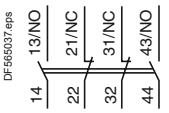

Electronic time delay contact blocks

LA2 KT

1 C/O

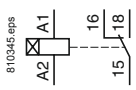

Suppressor modules

LA4 KC

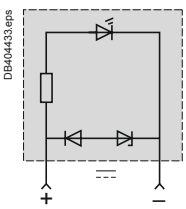

LA4 KE

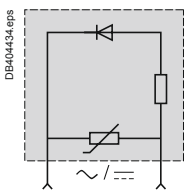

Characteristics:
pages B8/83 to B8/86

References:
pages B8/33 to B8/36

Dimensions:
page B8/87

TeSys K

Reversing contactors

LC2 K, LC8 K, LP2 K, LP5 K

On panel

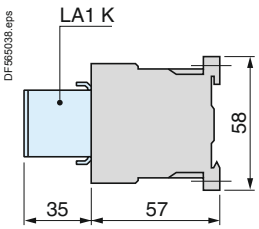

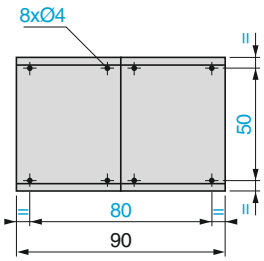

On mounting rail AM1 DP200 or AM1 DE200 (ـــ 35 mm)

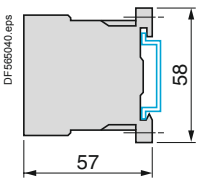



2 x LA9 D973

On one asymmetrical mounting rail DZ5 MB with 2 clip-on mounting plates LA9 D973 or on 2 mounting plates DX1 AP25.

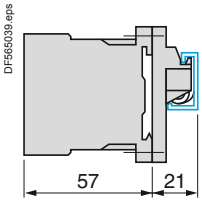

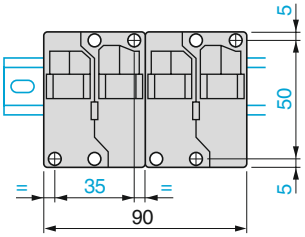

2 x DX1 AP25

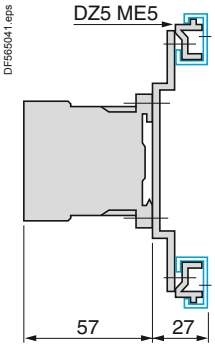

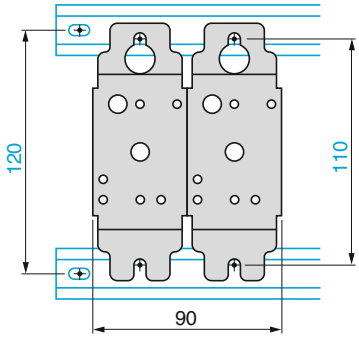

On printed circuit board for reversing contactors or 2 contactors mounted side by side.

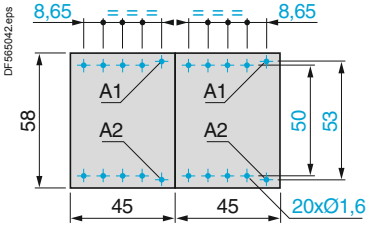

Electronic time delay contact blocks

LA2 KT



On reversing contactors

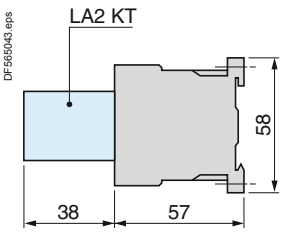

Suppressor modules

LA4 K●

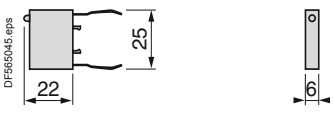

On reversing contactors LC2 K or LP2 K

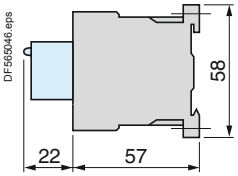

Characteristics:
pages B8/83 to B8/86

References:
pages B8/37 to B8/40

Schemes:
page B8/90

TeSys contactors
TeSys K reversing contactors

TeSys K

3-pole reversing contactors

With integral suppression device

With screw clamp connections | **LC8 K** | **LP5 K**

3 P + N/O

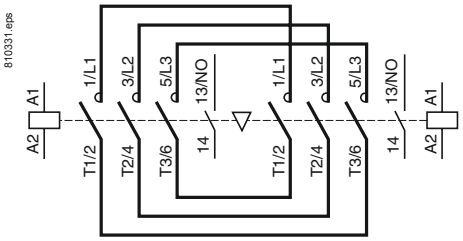

3 P + N/C

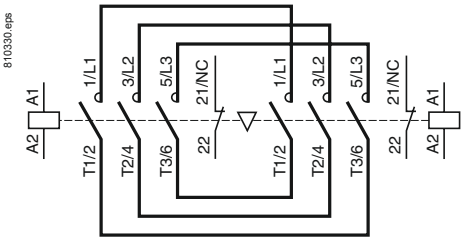

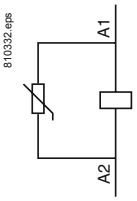

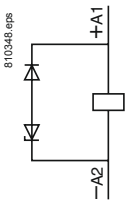

With Faston connectors or solder pins (printed circuit board)

3 P + N/O

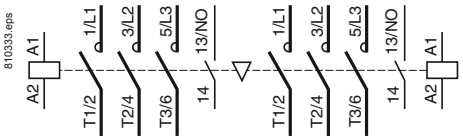

3 P + N/C

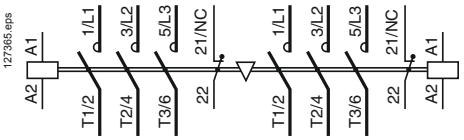

4-pole reversing contactors

Integral suppression device

With screw clamp connections | **With Faston connectors or solder pins (printed circuit board)** | **LC8 K** | **LP5 K**

4 P

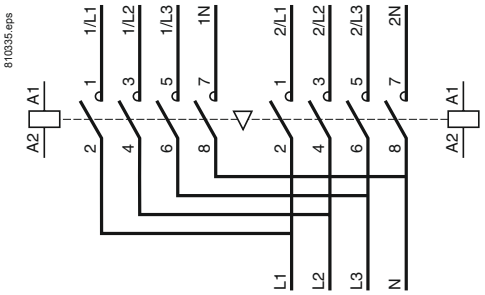

4 P

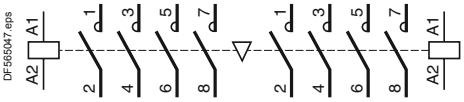

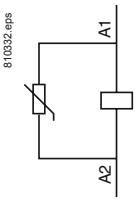

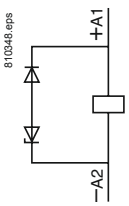

Instantaneous auxiliary contacts LA1 K

Terminal referencing conforming to standard EN 50012

LA1 KN20, KN207, KN203	LA1 KN02, KN027, KN023	LA1 KN11, KN117, KN113	LA KN02M	LA1 KN11M	LA1 KN11P
2 N/O	2 N/C	1 N/O + 1 N/C	2 N/C	1 N/O + 1 N/C	1 N/O + 1 N/C



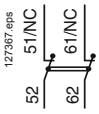

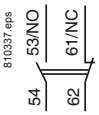

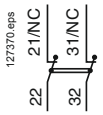

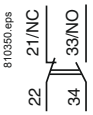

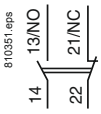

LA1 KN40, KN407, KN403	LA1 KN31, KN317, KN313	LA1 KN22, KN227, KN223	LA KN13, KN137, KN133	LA1 KN04, KN047, KN043
4 N/O	3 N/O + 1 N/C	2 N/O + 2 N/C	1 N/O + 3 N/C	4 N/C

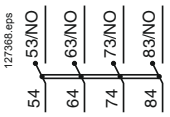

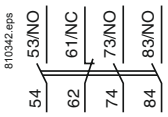

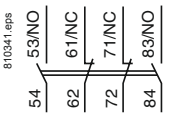

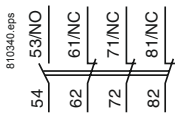

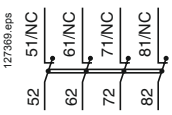

Electronic time delay contact blocks

LA2 KT

1 C/O

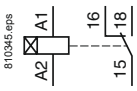

Suppressor modules

LA4 KC

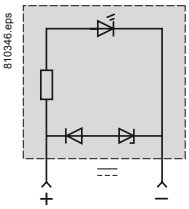

LA4 KE

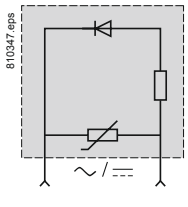

Characteristics: pages B8/83 to B8/86
References: pages B8/37 to B8/40
Dimensions: page B8/89

TeSys contactors

Mini-contactors TeSys LC1SKGC, for use in modular panels

TeSys SKGC

Environment

Rated insulation voltage (Ui)	Conforming to IEC 60947, VDE 0110 gr C, BS 5424, CSA 22-2 n° 14, UL 508	**V**	690	
Conforming to standards			IEC 60947, NF C 63-110, VDE 0660, BS 5424	
Product certifications			UL, CSA	
Protective treatment	Conforming to IEC 60068 (DIN 50015)		"TC" (Klimafest, Climateproof)	
Degree of protection	Conforming to VDE 0106		Protection against direct finger contact	
Ambient air temperature around the device				
	Storage	**°C**	-50…+70	
	Operation	**°C**	-20…+50	
Maximum operating altitude	Without derating	**m**	2000	
Operating position			**Vertical axis**	**Horizontal axis**
			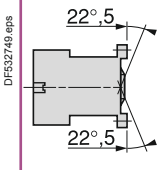 Without derating	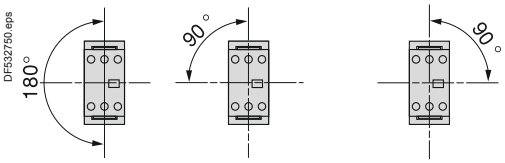 Without derating
Cabling, connectors			Min.	Max.
	Solid conductor	**mm²**	1 x 1.5 or 2 x 1.5	1 x 6 or 2 x 4
	Flexible cable without cable end	**mm²**	1 x 0.5 or 2 x 0.35	1 x 6 or 2 x 2.5
	Flexible cable with cable end	**mm²**	1 x 0.35 or 2 x 0.35	1 x 6 or 2 x 1.5
Tightening torque	Pozidriv n° 1 head	**N.m**	0.8	
Terminal referencing			Conforming to standards EN 50005	

References:
pages B8/46 and B8/47

Dimensions, schemes:
page B8/95

TeSys contactors

Mini-contactors TeSys LC1SKGC, for use in modular panels

TeSys SKGC

Pole characteristics

Mini-contactor type				LC1 SKGC2	LC1 SKGC3 and LC1 SKGC4
Conventional thermal current (Ith)	For ambient temperature ≤ 55 °C		**A**	20	20
Rated operational frequency			**Hz**	50/60	
Frequency limit of the operational current			**Hz**	up to 400	
Rated operational voltage (Ue)			**V**	690	
Rated making capacity	I rms conforming to NF C 63-110 and IEC 60947		**A**	50	85
Rated breaking capacity (for Ue ≤ 400 V)	Conforming to NF C 63-110 and IEC 60947 (I rms)		**A**	40	68
Permissible short time rating	In free air for a time "t" from cold state (θ ≤ 55 °C)		**A**	40	60
Short-circuit protection	gl fuse U ≤ 440 V		**A**	20	20
Average impedance per pole	At Ith and 50 Hz		**mΩ**	4	4
Maximum rated operational current	For temperature ≤ 55 °C	AC-3 (Ue ≤ 400 V)	**A**	5	9
		AC-1	**A**	20	20
Use in category AC-1 resistive circuits, heating, lighting (Ue ≤ 440 V)	Increase in rated operational current by paralleling of 2 poles		**A**	32	32

Auxiliary contact characteristics of mini-contactors

Rated operational voltage (Ue)	Up to	**V**	690
Rated insulation voltage (Ui)	Conforming to IEC 60947, BS 5424, VDE 0110 group C, CSA C 22-2 n° 14	**V**	690
Conventional thermal current (Ith)	For ambient temperature ≤ 55 °C	**A**	10
Frequency of the operational current		**Hz**	Up to 400
Short-circuit protection	Conforming to IEC 60947 and VDE 0660, gl fuse	**A**	10

Operational power of contacts conforming to IEC 60947

a.c. supply, category AC-15

Electrical durability (valid for up to 3600 operating cycles/hour) on an inductive load such as the coil of an electromagnet: making current (cos φ 0.7) = 10 times the power broken (cos φ 0.4).

	V	24	48	110/127	220/230	380/400	440
1 million operating cycles	**VA**	48	96	240	440	800	880
3 million operating cycles	**VA**	17	34	86	158	288	317
10 million operating cycles	**VA**	7	14	36	66	120	132
Occasional making capacity	**VA**	1000	2050	5000	10000	14000	13000

d.c. supply, category DC-13

Electrical durability (valid for up to 1200 operating cycles/hour) on an inductive load such as the coil of an electromagnet, without economy resistor, the time constant increasing with the load.

	V	24	48	110	220	440	440
1 million operating cycles	**W**	120	80	60	52	51	880
3 million operating cycles	**W**	55	38	30	28	26	317
10 million operating cycles	**W**	15	11	9	8	7	132
Occasional making capacity	**W**	720	600	400	300	230	13000

References: pages B8/46 and B8/47
Dimensions, schemes: page B8/95

TeSys contactors

Mini-contactors TeSys LC1SKGC, for use in modular panels

TeSys SKGC

Control circuit characteristics

Mini-contactor type			LC1 SKGC2	LC1 SKGC3 and LC1 SKGC4
Rated control circuit voltage (Uc)		V	∿ 24…400	
Control voltage limits (θ ≤ 55 °C)	Operation		0.85…1.1 Uc	
	For drop-out		≥ 0.20 Uc	
Average coil consumption at 20 °C and at Uc				
	Inrush	VA	16	23
	Sealed	VA	4.2	4.9
Heat dissipation		W	1.4	1.5
Operating time at 20 °C and at Uc				
Between coil energisation and	opening of the N/C contacts	ms	8…16	
	closing of the N/O contacts	ms	7…14	
Between coil de-energisation and	opening of the N/O contacts	ms	6…8	
	closing of the N/C contacts	ms	8…10	
Maximum operating rate	In operating cycles per hour		1200	
Mechanical durability at Uc in millions of operating cycles	50/60 Hz coil		10	

References:
pages B8/46 and B8/47

Dimensions, schemes:
page B8/95

TeSys contactors

Mini-contactors TeSys LC1SKGC, for use in modular panels

Use in category AC-3 (Ue ⩽ 440 V)

Control of 3-phase asynchronous squirrel cage motors with breaking whilst running.
The current broken (Ic) in category AC-3 is equal to the rated operational current of the motor.

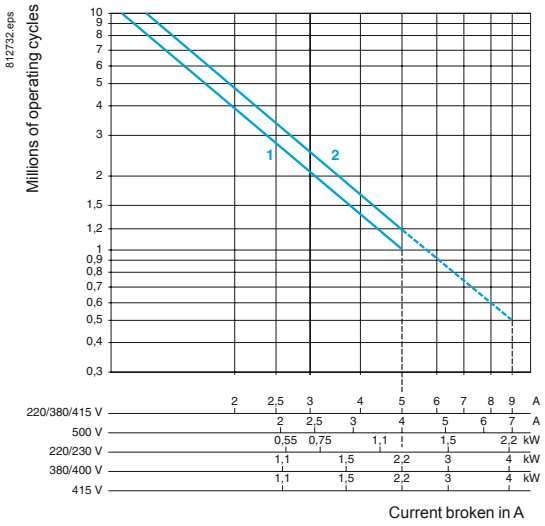

1. LC1 SKGC2
2. LC1 SKGC3 and SKGC4

- - - - - only up to 415 V

Use in category AC-1 (Ue ⩽ 440 V)

Control of resistive circuits (cos φ ⩾ 0.95).
The current broken (Ic) in category AC-1 is equal to the current (Ie) normally drawn by the load.

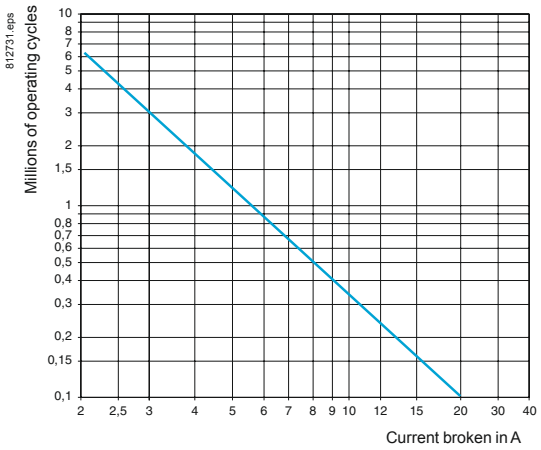

References:
pages B8/46 and B8/47

Dimensions, schemes:
page B8/95

TeSys contactors

Mini-contactors TeSys LC1SKGC, for use in modular panels

Dimensions

Mini-contactors LC1 SKGC2

Mounting

On mounting rail AM1 DP200 or AM1 DE200 (⎓ 35 mm)

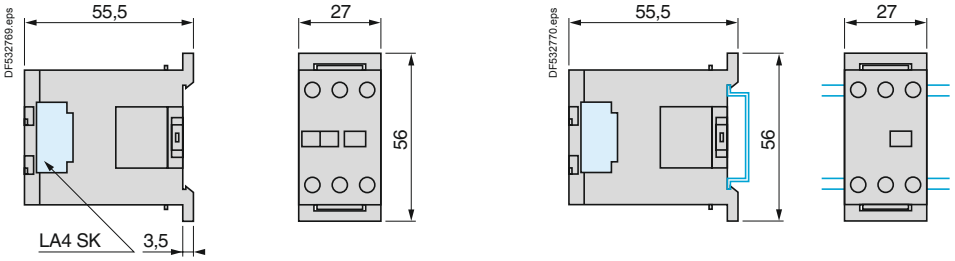

Dimensions

Mini-contactors LC1 SKGC3 and SKGC4

Mounting

On panel

On mounting rail AM1 DP200 or AM1 DE200 (⎓ 35 mm)

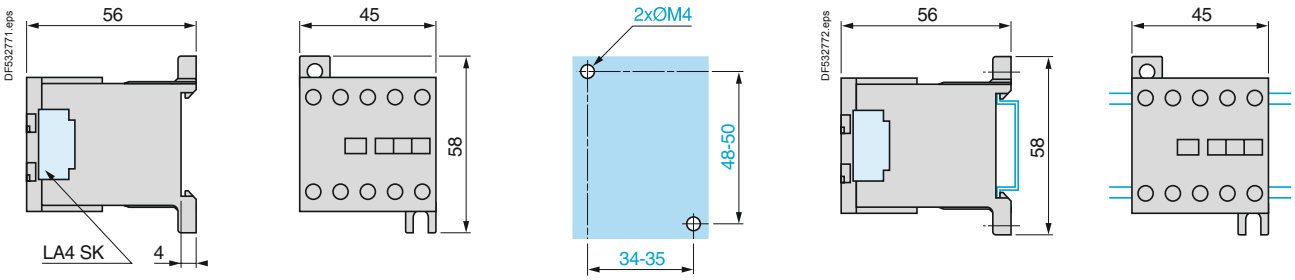

2-pole mini-contactors

LC1 SKGC2

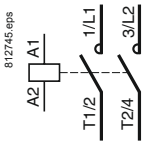

3-pole mini-contactors

LC1 SKGC310

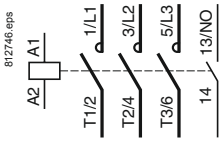

LC1 SKGC301

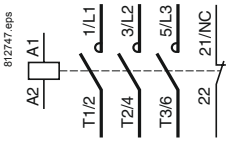

4-pole mini-contactors

LC1 SKGC400

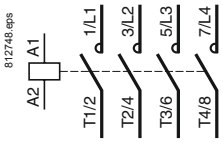

References:
pages B8/46 and B8/47

Characteristics:
pages B8/91 to B8/94

Modular equipment
Standard contactors TeSys GC

PB113076_13.eps



GC 25

Presentation

TeSys GC contactors are designed for use in modular panels and enclosures.
These contactors feature:

■ **Easy installation:**
□ quick clip-on fixing and locking onto 35 mm omega rail
□ easy connection by means of ready-to-tighten, captive, pozidrive screw terminals.

■ **Compact size:**
All units have a common depth of 60 mm and width in modules of 17.5 mm (width of one module: 17.5 mm).

■ **User safety:**
□ use of materials conforming to strictest fire safety standards
□ live parts protected against direct finger contact
□ completely safe operation
□ state indication on front panel.

Standards

This range of modular contactors has been designed taking into account the requirements of international standard IEC 61095.
This standard is specific to “Electromagnetic contactors for domestic and similar use”.
It has very strict requirements, meeting the expectations of users, with regard to the safety of equipment and persons in “premises and areas accessible to the public”.
Conformity with this standard makes it possible to obtain the following quality labels without the need for additional tests: NF-USE, VDE, CEBEC, etc.

Applications

TeSys GC modular contactors are designed for switching all single-phase, 3-phase or 4-phase loads up to 100 A.

Power switching

These contactors have multiple applications in industrial, agricultural and commercial premises, hospitals and the home, i.e. wherever switching of a specific supply is required:
■ lighting
■ heating
■ ventilation
■ motorised shutters or gates.

Setting-up precautions

The contactor controls must be bounce free. If not, connect a coil suppression block 1 (GAP 21 or 23) across the coil terminals y 250 V.
When several contactors which operate at the same time are mounted side by side, a GAC 5 ventilation 1/2 module 2 must be fitted every 2 contactors.

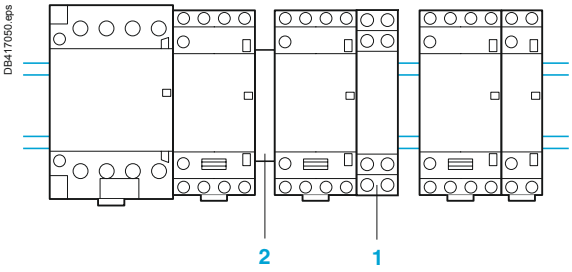

It is advisable to mount electronic units at the bottom of the modular panel and to separate them from electromechanical units by a space 3 equal to one module, or by 2 ventilation 1/2 modules (GAC 5).

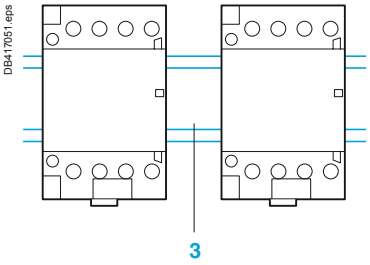

Derating of contactors mounted in a modular enclosure if the temperature within the enclosure is > 40 °C.

Contactor rating	40 °C	50 °C	60 °C (1)
16 A	16 A	14 A	13 A
25 A	25 A	22 A	20 A
40 A	40 A	36 A	32 A
63 A	63 A	57 A	50 A
100 A	100 A	87 A	80 A

(1) Ventilation 1/2 module must be fitted.

Lighting (Maximum number of lamps depending on the power of each unit) Presentation of installations according to type of supply

■ Single-phase circuit, 230 V

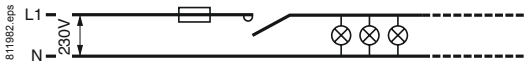

■ 3-phase circuit, 230 V

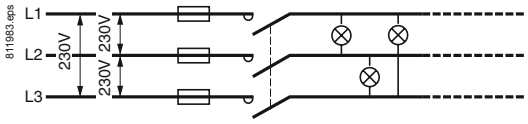

The maximum number of lamps which can be operated per phase is equal to the number of lamps in the "single phase 230 V" table divided by $\sqrt{3}$.

■ 3-phase circuit, 400 V (with neutral)

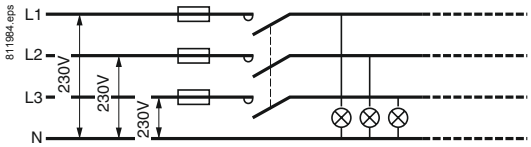

The maximum number of lamps which can be operated per phase is equal to the total number of lamps in the "single-phase 230 V" table.

Contactor rating for a single-phase 230 V circuit (single-pole)

Fluorescent lamps with starter

Single fitting	Non corrected					With parallel correction					Contactor rating
P (W)	20	40	50	80	110	20	40	58	80	110	–
I_B (A)	0.39	0.43	0.70	0.80	1.2	0.19	0.29	0.46	0.57	0.79	–
C (µF)	–	–	–	–	–	5	5	7	7	16	–
Maximum number of lamps	22	20	13	10	7	15	15	10	10	5	**16 A**
	30	28	17	15	10	20	20	15	15	7	**25 A**
	70	60	35	30	20	40	40	30	30	14	**40 A**
	100	90	56	48	32	60	60	43	43	20	**63 A**
Twin fitting	**Non corrected**					**With series correction**					**Contactor rating**
P (W)	2 x 18	2 x 36	2 x 58	2 x 80	2 x 140	2 x 18	2 x 36	2 x 58	2 x 80	2 x 140	–
I_B (A)	0.44	0.82	1.34	1.64	2.2	0.26	0.48	0.78	0.96	1.3	–
C (µF)	–	–	–	–	–	3.5	4.5	7	9	18	–
Maximum number of lamps	20	11	7	5	4	30	17	10	9	6	**16 A**
	30	16	10	8	6	46	25	16	13	10	**25 A**
	50	26	16	13	10	80	43	27	22	16	**40 A**
	75	42	25	21	16	123	67	42	34	25	**63 A**

High pressure mercury vapour lamps

	Non corrected						With parallel correction							Contactor rating
P (W)	50	80	125	250	400	700	50	80	125	250	400	700	1000	–
I_B (A)	0.6	0.8	1.15	2.15	3.25	5.4	0.35	0.50	0.7	1.5	2.4	4	5.7	–
C (µF)	–	–	–	–	–	–	7	8	10	18	25	40	60	–
Maximum number of lamps	15	10	8	4	2	1	10	9	9	4	3	2	–	**16 A**
	20	15	10	6	4	2	15	13	10	6	4	2	1	**25 A**
	34	27	20	10	6	4	28	25	20	11	8	5	3	**40 A**
	53	40	28	15	10	6	43	38	30	17	12	7	5	**63 A**

I_B: *value of current drawn by each lamp at its rated voltage.*
C*: unit capacitance for each lamp.*
I_B *and* ***C*** *correspond to values normally quoted by lamp manufacturers*

Contactor rating for a single-phase 230 V circuit (single-pole) (continued)

Low pressure sodium vapour lamps

	Non corrected						With parallel correction						Contactor rating
P (W)	18	35	55	90	135	180	18	35	55	90	135	180	–
I_B (A)	0.35	1.4	1.4	2.1	3.1	3.1	0.35	0.6	0.6	0.9	0.9	0.9	–
C (µF)	–	–	–	–	–	–	5	20	20	26	45	40	–
Maximum number of lamps	18	4	5	3	2	2	14	3	3	2	1	1	**16 A**
	34	9	9	6	4	4	21	5	5	4	2	2	**25 A**
	57	14	14	9	6	6	40	10	10	8	4	5	**40 A**
	91	24	24	19	10	10	60	15	15	11	6	7	**63 A**

High pressure sodium vapour lamps

	Non corrected					With parallel correction					Contactor rating
P (W)	70	150	250	400	1000	70	150	250	400	1000	–
I_B (A)	1	1.8	3	4.4	10.3	0.6	0.7	1.5	2.5	6	–
C (µF)	–	–	–	–	–	12	20	32	45	100	–
Maximum number of lamps	8	4	2	1	–	6	6	2	2	1	**16 A**
	12	7	4	3	1	9	9	3	4	2	**25 A**
	20	13	8	5	2	18	18	6	8	4	**40 A**
	32	18	11	8	3	25	25	9	12	6	**63 A**

Metal iodine or halogen vapour lamps

	Non corrected						With parallel correction							Contactor rating
P (W)	35	70	150	250	400	1000	39	70	150	250	400	1000	2000	–
I_B (A)	0.3	0.5	1	1.5	2.5	6	0.3	0.5	1	1.5	2.5	6	5.5	–
C (µF)	–	–	–	–	–	–	6	12	20	32	45	85	60	–
Maximum number of lamps	27	16	8	5	3	1	12	6	4	3	2	–	1	**16 A**
	40	24	12	8	5	2	18	9	6	4	3	1	2	**25 A**
	68	42	20	14	8	4	31	16	10	7	5	3	3	**40 A**
	106	64	32	21	13	5	50	25	15	10	7	4	5	**63 A**

Incandescent and halogen lamps

									Contactor rating
P (W)	60	75	100	150	200	300	500	1000	–
I_B (A)	0.26	0.32	0.44	0.65	0.87	1.3	2.17	4.4	–
Maximum number of lamps	30	25	19	12	10	7	4	2	**16 A**
	45	38	28	18	14	10	6	3	**25 A**
	85	70	50	35	26	18	10	6	**40 A**
	125	100	73	50	37	25	15	8	**63 A**

Halogen lamps used with transformer

					Contactor rating
P (W)	60	80	105	150	–
I_B (A)	0.26	0.35	0.45	0.65	–
Maximum of lamps	9	8	6	4	**16 A**
	14	12	9	6	**25 A**
	27	23	18	13	**40 A**
	40	35	27	19	**63 A**

I_B: *value of current drawn by each lamp at its rated voltage.*
C*: unit capacitance for each lamp.*
I_B *and* ***C*** *correspond to values normally quoted by lamp manufacturers*

Heating (AC-7a)

Single-phase, 2-pole switching

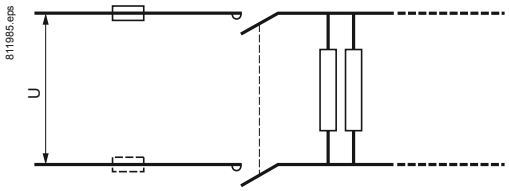

3-phase switching

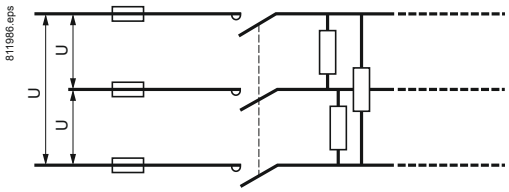

Heating by resistive elements or by infra-red radiators, convectors or radiators, heating ducts, industrial furnaces. The current peak between the hot and cold states must not exceed 2 to 3 In at the moment of switch-on.

Contactor selection according to power and required electrical life

Electrical durability (in operating cycles)	Maximum power (kW)					Contactor rating
	100×10^3	150×10^3	200×10^3	500×10^3	10^6	
Single-phase switching 230 V (2-pole)	3.5	3	2.2	1	0.8	**16 A**
	5.4	4.6	3.5	1.6	1.2	**25 A**
	8.6	7.4	5.6	2.6	1.9	**40 A**
	13.6	11.6	8.8	4	3	**63 A**
	21.6	18.4	14	6.4	4.8	**100 A**
3-phase switching 400 V (3-pole)	10	9	6.5	3.2	2.2	**16 A**
	16	14	10	5	3.5	**25 A**
	26	22	17	7.5	6	**40 A**
	41	35	26.5	12	9	**63 A**
	64.8	55.2	42	19.2	14.4	**100 A**

Characteristics: pages B8/102 and B8/103
References: page B8/48
Dimensions, schemes: pages B8/104 and B8/105

Motor control (AC-7b)

Single-phase circuit, 230 V

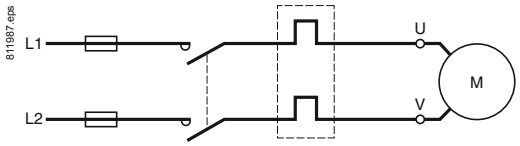

3-phase circuit, 400 V

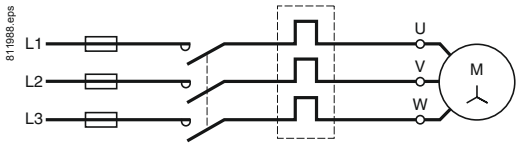

Contactor selection according to maximum power in kW

230 V single-phase capacitor motor (2-pole)	400 V 3-phase motor	Contactor rating (Ith)
0.55	2.2	**16 A**
1.1	4	**25 A**
2.2	7.5	**40 A**
4	11	**63 A**

Modular equipment
TeSys GC standard contactors

TeSys GC

Environment

Contactor type			GC16	GC25	GC40	GC63	GC100
Rated insulation voltage (Ui)	Conforming to IEC 61095	V	500				
	Conforming to VDE 0110	V	500				
Rated impulse withstand voltage (Uimp)		kV	4 in enclosure				
Conforming to standards			IEC 61095, VDE 0637-3 and IEC 60947-5 for auxiliary contacts				
Product certifications			NF- USE, VDE, CEBEC, ÖVE				
Degree of protection	Conforming to VDE 0106		Protection against direct finger contact (IP 20 open, IP 40 in enclosure)				
Protective treatment	Standard version		"TC"				
Ambient air temperature around the device	Storage	°C	-40…+70				
	Operation	°C	-5…+50 (0.85…1.1 Uc)				
Maximum operating altitude	Without derating	m	3000				
Operating positions	Without derating		±30° in relation to normal vertical mounting plane				
Shock resistance 1/2 sine wave = 10 ms	Contactor open		10 gn				
	Contactor closed		15 gn				
Vibration resistance 5…300 Hz	Contactor open		2 gn				
	Contactor closed		3 gn				
Flame resistance			Conforming to IEC 61095				

Pole characteristics

Number of poles			2, 3 or 4				
Rated operational current (Ie) (Ue ≤ 440 V)	In AC-7a (heating)	A	16	25	40	63	100
	In AC-7b (motor control)	A	5	8.5	15	25	–
Rated operational voltage (Ue)	Up to	V	250 two-pole contactors, 415 three and four-pole contactors				
Frequency limits	Of the operating current	Hz	400				
Conventional thermal current (Ith)	θ ≤ 50 °C	A	16	25	40	63	100
Rated breaking and making capacity	Conforming to IEC 61095 (AC-7b) I rms 400 V 3-phase	A	40	68	120	200	–
Permissible short time rating no current flowing for preceding 15 minutes with θ ≤ 40 °C	For 10 s	A	128	200	320	504	800
	For 30 s	A	40	62	100	157	250
Short-circuit protection by fuse or circuit breaker U ≤ 440 V	gl fuse	A	16	25	40	63	100
	Circuit breaker I^2t (at 3 kA rms prospective) 230 V	A^2s	5000	10000	16000	18000	–
	Circuit breaker I^2t (at 3 kA rms prospective) 400 V	A^2s	9000	14000	17500	20000	–
Electrical durability in operating cycles	AC-7a, AC-7b		100000	100000	100000	100000	30000
Average impedance per pole	At Ith and 50 Hz	mΩ	2.5	2.5	2	2	1
Power dissipated per pole	For the above operational currents	W	0.65	1.6	3.2	8	10
Maximum cabling c.s.a. Flexible cable without cable end	1 conductor	mm^2	6	6	25	25	35
	2 conductors	mm^2	4	4	16	16	–
Flexible cable with cable end	1 conductor	mm^2	6	6	16	16	35
	2 conductors	mm^2	1.5	1.5	4	4	–
Solid cable without cable end	1 conductor	mm^2	6	6	25	25	35
	2 conductors	mm^2	4	4	6	6	10
Tightening torque	Power circuit connections	N.m	0.8	0.8	3.5	3.5	3.5

Selection: pages B8/98 to B8/101
References: page B8/48
Dimensions, schemes: pages B8/104 and B8/105

TeSys GC

Control circuit characteristics

Contactor type				GC16, GC25 single or 2-pole	GC16, GC25 3 or 4-pole **GC40, GC63** 2-pole	GC40, GC63 3 or 4-pole **GC100** 2-pole	GC100 4-pole
Rated control circuit voltage (Uc)		50 or 60 Hz	**V**	12…240 V, for other voltages, please consult your Regional Sales Office			
Control voltage limits ($\theta \leq 50$ °C)	50 Hz coils	Operational		0.85…1.1 Uc			
		Drop-out		0.2…0.75 Uc			
Average coil consumption at 20 °C and at Uc	∼ 50 Hz	Inrush	**VA**	15	34	53	106
		Sealed	**VA**	3.8	4.6	6.5	13
Maximum heat dissipation		50/60 Hz	**W**	1.3	1.6	2.1	4.2
Operating time		Closing “C”	**ms**	10…30			
		Opening “O”	**ms**	10…25			
Mechanical durability		In operating cycles		10^6			
Maximum operating rate at ambient temperature ≤ 50 °C		In operating cycles per hour		300			
Maximum cabling c.s.a.	Flexible cable without cable end	1 or 2 conductors	**mm²**	2.5			
	Flexible cable with cable end	1 conductor	**mm²**	2.5			
		2 conductors	**mm²**	1.5			
	Solid cable without cable end	1 or 2 conductors	**mm²**	1.5			
Tightening torque			**N.m**	0.8			

Instantaneous auxiliary contact characteristics

Rated operational voltage (Ue)	Up to	**V**	250
Rated insulation voltage (Ui)	Conforming to IEC 60947-5	**V**	500
	Conforming to VDE 0110	**V**	500
Conventional thermal current (Ith)	For ambient $\theta \leq 50$ °C	**A**	5
Mechanical durability	Operating cycles		10^6
Maximum cabling c.s.a.	Flexible or solid conductor	**mm²**	2.5
Tightening torque		**N.m**	0.8

Selection: pages B8/98 to B8/101
References: page B8/48
Dimensions, schemes: pages B8/104 and B8/105

TeSys GC

Dimensions

Contactors

Common side view	GC 1610, 1611, 1620 GC 2502, 2510, 2511, 2520	GC 1622, 1640 GC 2504, 2522, 2530, 2540
	1 module	2 modules

DB417023.eps

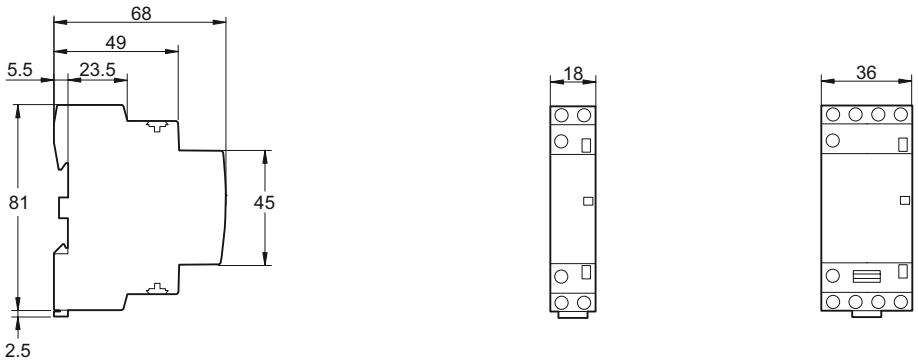

Common side view	GC 4002, 4011, 4020 GC 6302, 6311, 6320	GC 4004, 4022, 4030, 4040 GC 6304, 6322, 6330, 6340
	2 modules	3 modules

DB417024.eps

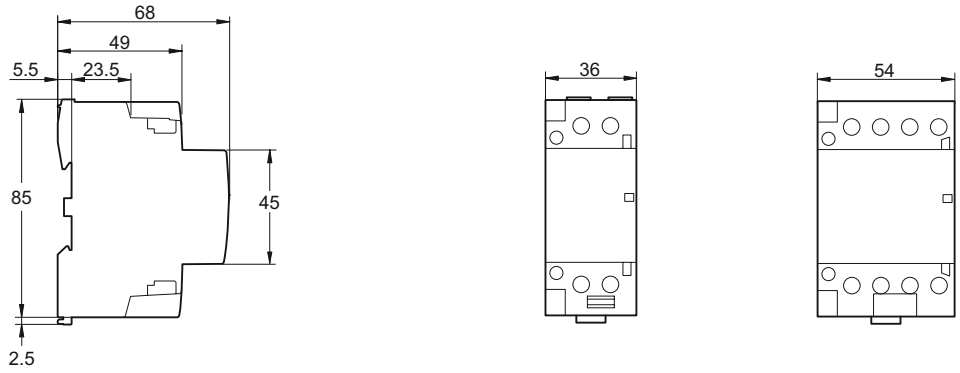

Common side view	GC 10020	GC 10040
	3 modules	6 modules

DB417025.eps

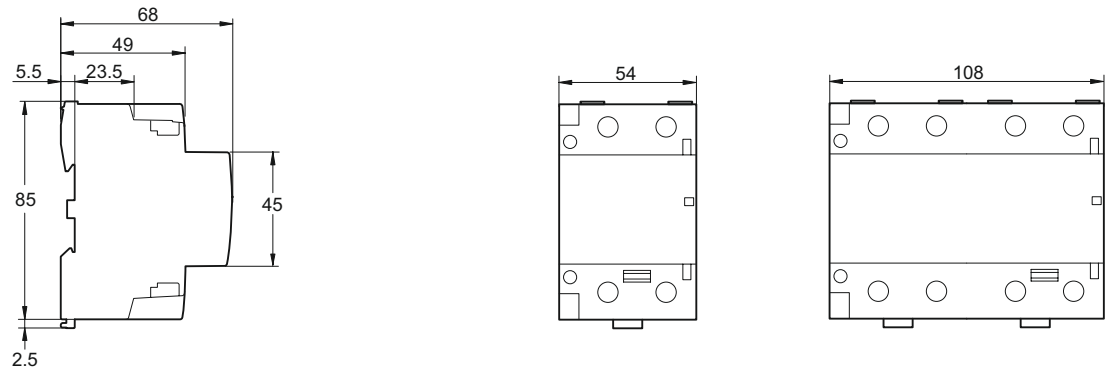

Modular equipment
TeSys GC standard contactors

TeSys GC

Dimensions

Auxiliary contacts
GAC 0511, 0531 and 0521

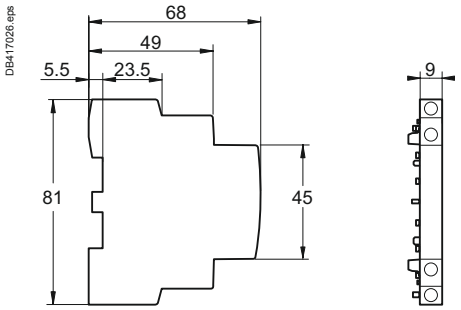

Coil suppression blocks
GAP 21 and 23

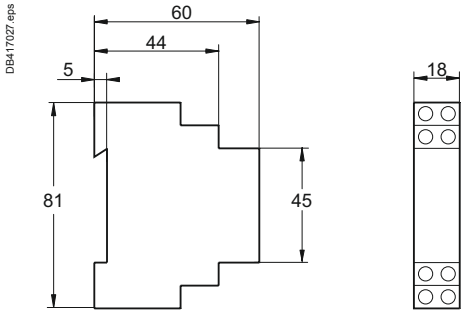

Clip-on ventilation 1/2 module
GAC 5

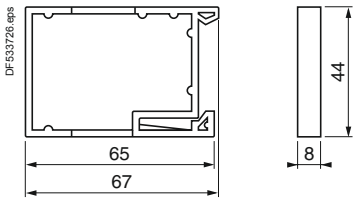

Schemes

Contactors

GC ●●10

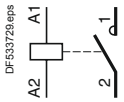

GC ●●20

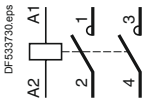

GC ●●30

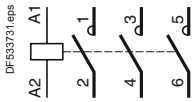

GC ●●40

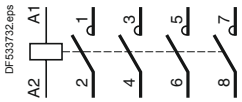

GC ●●11

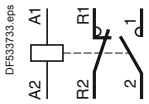

GC ●●22

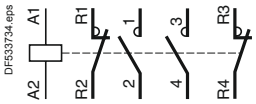

GC ●●02

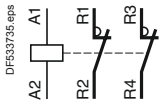

GC ●●04

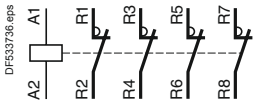

Auxiliary contacts

GAC 0521

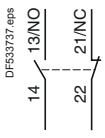

GAC 0531

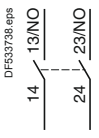

GAC 0511



Modular equipment
TeSys GY "dual tariff" contactors

PB113083_13.eps



GY 25

Presentation

TeSys GY "dual tariff" contactors are designed for use in modular panels and enclosures.
These contactors feature:
■ **Easy installation:**
□ quick clip-on fixing and locking onto 35 mm omega rail
□ easy connection by means of ready-to-tighten captive, pozidrive screw terminals.
■ **Compact size**
All units have a common depth of 60 mm and width in modules of 17.5 mm (width of one module: 17.5 mm).
■ **User safety:**
□ use of materials conforming to strictest fire safety standards
□ live parts protected against direct finger contact
□ completely safe operation
□ state indication on front panel.
"Dual tariff" contactors are designed for use with Electricity Supply Authority dual tariffs.
They have a 4-position selector switch on the front panel:

"Stop" (O)	For switching off the load, e.g. for prolonged periods of absence.
"Off peak" Automatic start (A)	The contactor switches automatically during "off peak" hours as set by the Supply Authority remote control and thus supplies the load, (washing machine, dishwasher, convector heater, water heater) during this period, at an economy rate to the user.
"Peak time" Manual start (I)	In this position, the contactor supplies the load to cater for additional requirements for hot water, heating, etc., but at the standard rate. The contactor returns automatically to the "off-peak" position at the start of the "off-peak" period.
"Peak time" Manual override with lock	Facility for setting the contactor to continuous manual operation, ignoring the automation system and the Supply Authority control; setting and locking is achieved by means of a tool, with manual return to the "AUTO" position.

Standards

This range of modular contactors has been designed taking into account the requirements of international standard IEC 61095.
This standard is specific to "Electromagnetic contactors for domestic and similar use".
It has very strict requirements, meeting the expectations of users, with regard to the safety of equipment and persons in "premises and areas accessible to the public".
Conformity with this standard makes it possible to obtain the following quality labels without the need for additional tests: NF-USE, VDE, CEBEC, etc.

"Dual tariff" modular contactors are designed for switching all single-phase, 3-phase or 4-phase loads up to 63 A.

TeSys GY contactors have multiple applications in industrial, agricultural and commercial premises, hospitals and the home, i.e. wherever switching of a specific supply is required:
■ lighting,
■ heating, ventilation,
■ motorised shutters or gates.

Setting-up precautions

The contactor controls must be bounce free. If not, connect a coil suppression block 1 (GAP 21 or 23) across the coil terminals ≤ 250 V.
When several contactors which operate at the same time are mounted side by side, a GAC 5 ventilation 1/2 module 2 must be fitted every 2 contactors.

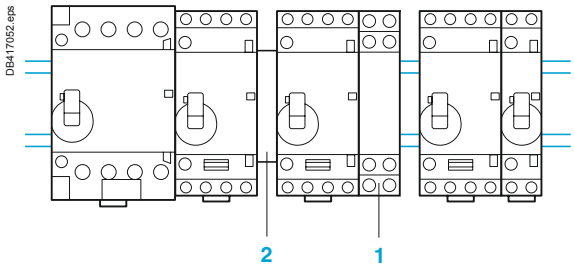

It is advisable to mount electronic units at the bottom of the modular panel and to separate them from electromechanical units by a space equal to one module 3 or by 2 ventilation 1/2 modules GAC 5.

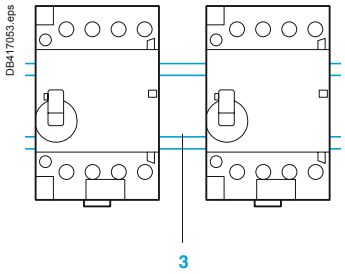

Derating of contactors mounted in a modular enclosure if the temperature within the enclosure is > 40 °C.

Contactor rating	40 °C	50 °C	60 °C (1)
16 A	16 A	14 A	13 A
25 A	25 A	22 A	20 A
40 A	40 A	36 A	32 A
63 A	63 A	57 A	50 A

(1) Ventilation 1/2 module must be fitted.

Modular equipment
TeSys GY "dual tariff" contactors

TeSys GY

Environment

Type			GY 16	GY 25	GY 40	GY 63
Rated insulation voltage (Ui)	Conforming to IEC 61095	V	500			
	Conforming to VDE 0110	V	500			
Rated impulse withstand voltage (Uimp)		kV	4 in enclosure			
Conforming to standards			IEC 61095, VDE 0637-3 and IEC 60947-5 for auxiliary contacts			
Product certifications			NF-USE, VDE, CEBEC, ÖVE			
Degree of protection	Conforming to VDE 0106		Protection against direct finger contact IP 20 open, IP 40 in enclosure			
Protective treatment	Standard version		"TC"			
Ambient air temperature around the device	Storage	°C	-40…+70			
	Operation	°C	-5…+50 (0.85…1.1 Uc)			
Maximum operating altitude	Without derating	m	3000			
Operating positions	Without derating		±30° in relation to normal vertical mounting plane			
Shock resistance 1/2 sine wave = 11 ms	Contactor open		10 gn			
	Contactor closed		15 gn			
Vibration resistance 5…300 Hz	Contactor open		2 gn			
	Contactor closed		3 gn			
Flame resistance			Conforming to IEC 61095			

Pole characteristics

Number of poles			2, 3 or 4			
Rated operational current (Ie) (Ue ≤ 440 V)	In AC-7a (heating)	A	16	25	40	63
	In AC-7b (motor control)	A	5	8.5	15	25
Rated operational voltage (Ue)	Up to	V	250 - 2-pole contactors, 415 - 3 and 4-pole contactors			
Frequency limits	Of the operating current	Hz	400			
Conventional thermal current (Ith)	θ ≤ 50 °C	A	16	25	40	63
Rated breaking and making capacity	Conforming to IEC 61095 (AC-7b) I rms 400 V 3-phase	A	40	68	120	200
Short time rating with no current flow for the previous previous 15 minutes with θ ≤ 40 °C	For 10 s	A	128	200	320	504
	For 30 s	A	40	62	100	157
Short-circuit protection by fuse or circuit breaker U ≤ 440 V						
gI fuse		A	16	25	40	63
Circuit breaker I^2t (at 3 kA rms prospective)	230V	A^2s	5000	10000	16000	18000
	400V	A^2s	9000	14000	17500	20000
Electrical durability in operating cycles	AC-7a, AC-7b		100000	100000	100000	100000
Average impedance per pole	At Ith and 50 Hz	mΩ	2.5	2.5	2	2
Power dissipated per pole	For the above operational currents	W	0.65	1.6	3.2	8
Maximum cabling c.s.a.						
Flexible cable without cable end	1 conductor	mm^2	6	6	25	25
	2 conductors	mm^2	4	4	16	16
Flexible cable with cable end	1 conductor	mm^2	6	6	16	16
	2 conductors	mm^2	1.5	1.5	4	4
Solid cable without cable end	1 conductor	mm^2	6	6	25	25
	2 conductors	mm^2	4	4	6	6
Tightening torque	Power circuit connections	N.m	0.8	0.8	3.5	3.5

Selection: pages B8/98 to B8/101
References: page B8/49
Dimensions and schemes: pages B8/110 and B8/111

Modular equipment
TeSys GY "dual tariff" contactors

TeSys GY

Control circuit characteristics

Type			GY 16, GY 25 single or 2-pole	GY 16, GY 25 3 or 4-pole GY 40, GY 63 2-pole	GY 40, GY 63 3 or 4-pole
Rated control circuit voltage (Uc)	50 or 60 Hz	V	12…240 V, for other voltages, please consult your Regional Sales Office		
Control voltage limits (θ ≤ 50 °C)					
50 Hz coils	Operational		0.85…1.1 Uc		
	Drop-out		0.2…0.75 Uc		
Average consumption at 20 °C and at Uc					
∼ 50 Hz	Inrush	VA	15	34	53
	Sealed	VA	3.8	4.6	6.5
Heat dissipation	50/60 Hz	W	1.3	1.6	2.1
Operating time	Closing "C"	ms	10 ... 30		
	Opening "O"	ms	10 ... 25		
Mechanical durability	In operating cycles		10^6		
Maximum operating rate at ambient temperature ≤ 50 °C	In operating cycles per hour		300		
Maximum cabling c.s.a.					
Flexible cable without cable end	1 or 2 conductors	mm²	2.5		
Flexible cable with cable end	1 conductor	mm²	2.5		
	2 conductors	mm²	1.5		
Solid cable without cable end	1 or 2 conductors	mm²	1.5		
Tightening torque		N.m	0.8		

Instantaneous auxiliary contact characteristics

Rated operational voltage (Ue)	Up to	V	250
Rated insulation voltage (Ui)	Conforming to IEC 60947-5	V	500
	Conforming to VDE 0110	V	500
Conventional thermal current (Ith)	For ambient θ ≤ 50 °C	A	5
Mechanical durability	In operating cycles		10^6
Maximum cabling c.s.a.	Flexible or solid conductor	mm²	2.5
Tightening torque		N.m	0.8

Selection: pages B8/98 to B8/101
References: page B8/49
Dimensions and schemes: pages B8/110 and B8/111

Modular equipment
TeSys GY "dual tariff" contactors

TeSys GY

Dimensions

"Dual tariff" contactors

Common side view	GY 1620 GY 2520	GY 2530, 2540
	1 module	2 modules

DB417046.eps

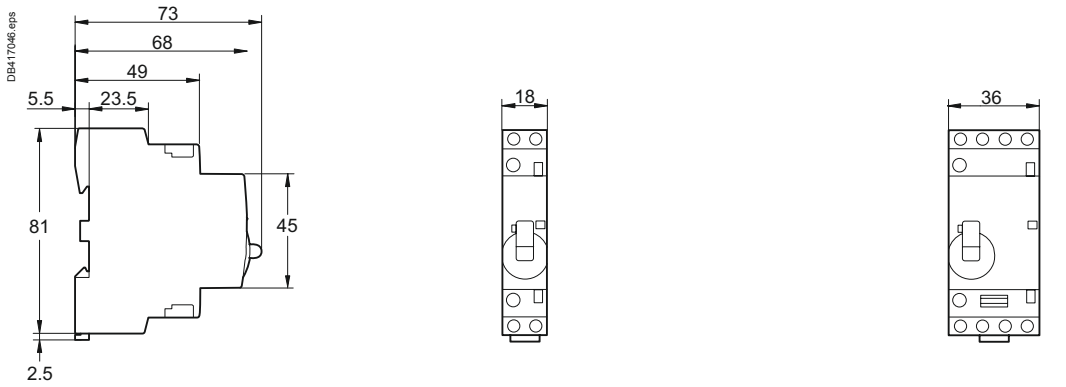

Common side view	GY 4020 GY 6320	GY 4030, 4040 GY 6330, 6340
	2 modules	3 modules

DB417047.eps

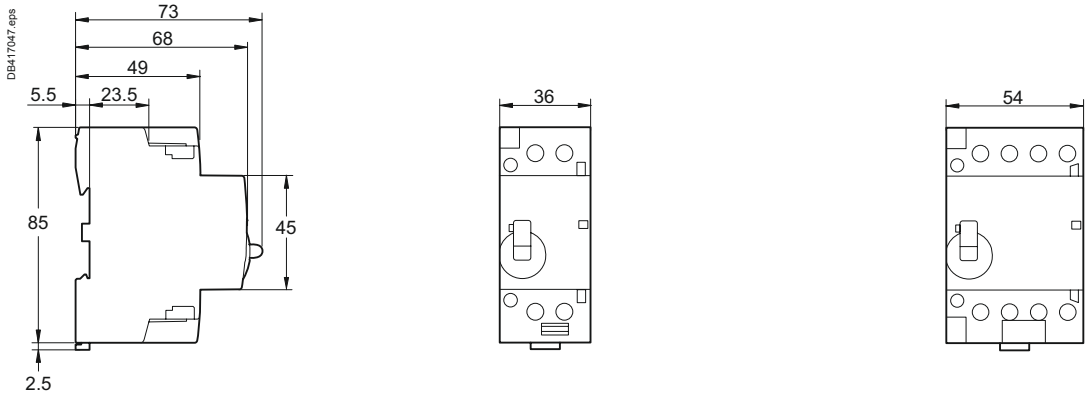

TeSys GY

Dimensions

Auxiliary contacts
GAC 0511, 0531 and 0521

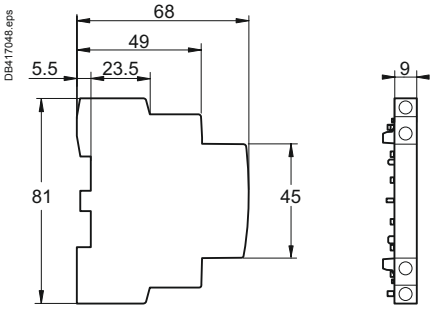

Coil suppression block
GAP 21 and 23

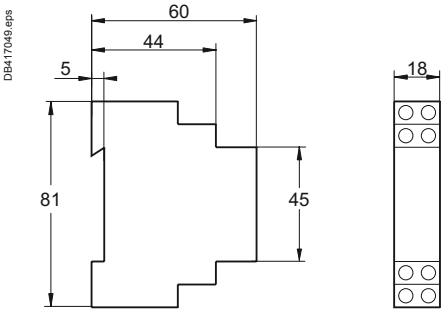

Clip-on ventilation 1/2 module
GAC 5

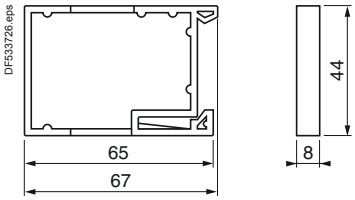

Schemes

Contactors

GY ●●20

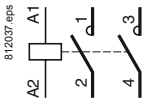

GY ●●30

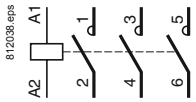

GY ●●40

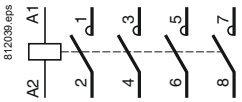

GY ●●11

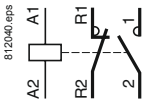

Auxiliary contacts

GAC 0521

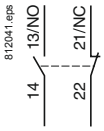

GAC 0531

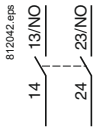

GAC 0511

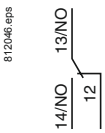

Modular equipment
TeSys GF impulse relays

TeSys GF

PF526284R.eps



GF 1611M7

Presentation

TeSys GF impulse relays are designed for use in modular enclosures.
They feature:

■ **Easy installation:**
- □ quick clip-on fixing and locking onto 35 mm omega rail
- □ easy connection by means of ready-to-tighten captive, pozidrive screw terminals.

■ **Compact size**

Units have a common depth of 60 mm and width of 18 mm.

■ **User safety:**
- □ live parts protected against direct finger contact
- □ completely safe operation
- □ state indication on front panel.

Standards

This range of modular impulse relays has been designed taking into account the requirements of international standard IEC 60669-2.
This standard is specific to “Impulse relays”.
Conformity with this standard makes it possible to obtain the following quality labels without the need for additional tests: NF-USE, VDE, CEBEC, etc.

Functions

Modular impulse relays are designed for opening and closing of circuits which are remotely controlled by impulses. The position is mechanically maintained.
These impulse relays are used in lighting circuits when there are more than two switching points.

Power switching

TeSys GF impulse relays have multiple applications in industrial, agricultural and commercial premises, hospitals and the home, i.e. wherever switching of a specific lighting supply is required.

Characteristics:
pages B8/114 and B8/115

References:
page B8/50

Dimensions, schemes:
page B8/116

Modular equipment
TeSys GF impulse relays

Lighting circuits

Fluorescent lamps with starter

Single fitting	Non corrected			With parallel correction		
Power in W	18	36	58	18	36	58
Number of lamps	70	35	21	50	25	16

Twin fitting	With series correction		
Power in W	2 x 18	2 x 36	2 x 58
Number of lamps	56	28	17

Incandescent lamps: filament lamps

Power in W	40	60	75	100	200
Number of lamps	40	25	20	16	8

Incandescent lamps: halogen lamps

Power in W	300	500	1000	1500
Number of lamps	5	3	1	1

Incandescent lamps: very low voltage halogen lamps

Power in W	20	50	75	100
Number of lamps	70	28	19	4

Low pressure sodium vapour lamps

	Non corrected			
Power in W	55	90	135	180
Number of lamps	24	15	10	7

High pressure sodium vapour lamps

	Non corrected		
Power in W	250	400	1000
Number of lamps	5	3	1

Heating circuits

Single-phase 230 V, 2-pole

Power in kW	3.6

Characteristics: pages B8/114 and B8/115
References: page B8/50
Dimensions, schemes: page B8/116

Modular equipment
TeSys GF impulse relays

TeSys GF

Environment

Rated insulation voltage (Ui)	Conforming to IEC 60947-1-5	**V**	400
	Conforming to VDE 0110	**V**	400
Rated impulse withstand voltage (Uimp)		**kV**	4 in enclosure
Conforming to standards			IEC 60669-1 and 60669-2, NF C 61-112
Product certifications			NF-USE, CEBEC, ASE, KEMA, N, S, D, FI, VDE
Degree of protection	Conforming to VDE 0106		Protection against direct finger contact IP 20 open, IP 40 in enclosure
Protective treatment	Standard version		"TC"
Ambient air temperature around the device	Storage	**°C**	-40…+80
	Operation	**°C**	-20…+50
Maximum operating altitude	Without derating	**m**	2000
Operating positions	Without derating		±90° in relation to normal vertical mounting plane
Shock resistance 1/2 sine wave = 10 ms	Impulse relay open		Please consult your Regional Sales Office
	Impulse relay closed		Please consult your Regional Sales Office
Vibration resistance 5…300 Hz	Impulse relay open		4 gn
	Impulse relay closed		4 gn

Pole characteristics

Number of poles				1 or 2	
Rated operational current (Ie) (Ue ≤ 250 V)	In AC-7a (heating)		**A**	16	
Rated operational voltage			**V**	250	
Conventional thermal current (Ith)	θ ≤ 50 °C		**A**	16	
Permissible short time rating no current flowing for preceding 15 minutes with θ ≤ 40 °C	For 1 s		**A**	320	
	For 10 s		**A**	96	
	For 30 s		**A**	48	
Short-circuit protection by fuse or circuit breaker	gI fuse		**A**	16	
	Circuit breaker I^2t (at 3 kA rms prospective)		**A^2s**	5000	
Average impedance per pole	At Ith and 50 Hz		**mΩ**	4	
Power dissipated per pole			**W**	1	
Maximum cabling c.s.a.				**Min.**	**Max.**
	Flexible cable without cable end	1 conductor	**mm^2**	0.5	6
		2 conductors	**mm^2**	0.5	4
	Flexible cable with cable end	1 conductor	**mm^2**	0.5	6
		2 conductors	**mm^2**	0.5	4
	Solid cable without cable end	1 conductor	**mm^2**	0.5	6
		2 conductors	**mm^2**	0.5	4
Tightening torque	Power circuit connections		**N.m**	0.8	

Presentation: page B8/112 | Selection: page B8/113 | References: page B8/50 | Dimensions, schemes: page B8/116

TeSys GF

Control circuit characteristics

Rated control circuit voltage (Uc)			**V**	12…240 V, for other voltages, please consult your Regional Sales Office
Control voltage limits (θ < 50 °C)		Operating threshold, dual frequency 50/60 Hz	**V**	0.85…1.1 Uc
Average consumption at 20 °C and at Uc		Inrush at 50 Hz	**VA**	19
Operating time		Closing “C”	**ms**	70
		Opening “O”	**ms**	70
Minimum impulse time			**ms**	70
Mechanical durability				10^6 operating cycles
Electrical durability				
		AC-21		200000 operating cycles
		AC-22		100000 operating cycles
Maximum operating rate		Operating cycles per hour		900
Maximum cabling c.s.a.				
	Flexible cable without cable end	1 or 2 conductors	**mm²**	2.5
	Flexible cable with cable end	1 conductor	**mm²**	2.5
		2 conductors	**mm²**	1.5
	Solid cable without cable end	1 or 2 conductors	**mm²**	1.5
Tightening torque			**N.m**	0.8

Modular equipment
TeSys GF impulse relays

Dimensions

GF 1610, GF 1611, GF 1620

DF534007.eps

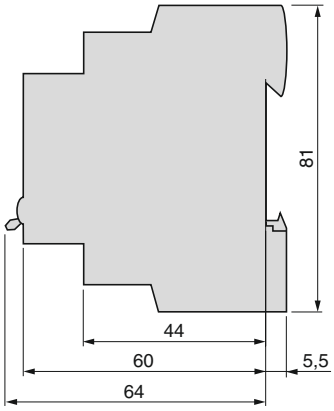

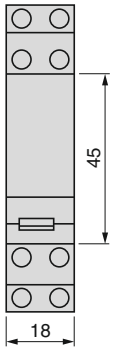

Schemes

GF 1610

DF534008.eps

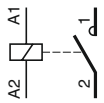

GF 1611

DF534009.eps

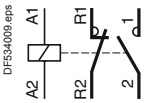

GF 1620

DF534010.eps

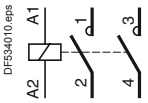

Technical information

Tests according to standard utilisation categories conforming to IEC 60947-4-1 and 5-1

Contactors

a.c. supply

Typical applications	Utilisation category	Electrical durability: making and breaking conditions: Making I	U	cos φ	Breaking I	U	cos φ	Occasional duty: making and breaking conditions: Making I	U	cos φ	Breaking I	U	cos φ
Resistors, non inductive or slightly inductive loads	**AC-1**	Ie	Ue	0.95	Ie	Ue	0.95	1.5 Ie	1.05 Ue	0.8	1.5 Ie	1.05 Ue	0.8
Motors													
Slip ring motors: starting, breaking.	**AC-2**	2.5 Ie	Ue	0.65	2.5 Ie	Ue	0.65	4 Ie	1.05 Ue	0.65	4 Ie	1.05 Ue	0.65
Squirrel cage motors: starting, breaking whilst motor running.	**AC-3**												
	Ie ⩽ (1)	6 Ie	Ue	0.65	1 Ie	0.17 Ue	0.65	10 Ie	1.05 Ue	0.45	8 Ie	1.05 Ue	0.45
	Ie > (2)	6 Ie	Ue	0.35	1 Ie	0.17 Ue	0.35	10 Ie	1.05 Ue	0.35	8 Ie	1.05 Ue	0.35
Squirrel cage motors: starting, reversing, inching	**AC-4**												
	Ie ⩽ (1)	6 Ie	Ue	0.65	6 Ie	Ue	0.65	12 Ie	1.05 Ue	0.45	10 Ie	1.05 Ue	0.45
	Ie > (2)	6 Ie	Ue	0.35	6 Ie	Ue	0.35	12 Ie	1.05 Ue	0.35	10 Ie	1.05 Ue	0.35

d.c. supply

Typical applications	Utilisation category	Electrical durability: making and breaking conditions: Making I	U	L/R (ms)	Breaking I	U	L/R (ms)	Occasional duty: making and breaking conditions: Making I	U	L/R (ms)	Breaking I	U	L/R (ms)
Resistors, non inductive or slightly inductive loads	**DC-1**	Ie	Ue	1	Ie	Ue	1	1.5 Ie	1.05 Ue	1	1.5 Ie	1.05 Ue	1
Shunt wound motors: starting, reversing, inching	**DC-3**	2.5 Ie	Ue	2	2.5 Ie	Ue	2	4 Ie	1.05 Ue	2.5	4 Ie	1.05 Ue	2.5
Series wound motors: starting, reversing, inching	**DC-5**	2.5 Ie	Ue	7.5	2.5 Ie	Ue	7.5	4 Ie	1.05 Ue	15	4 Ie	1.05 Ue	15

Control relays and auxiliary contacts

a.c. supply

Typical applications	Utilisation category	Electrical durability: making and breaking conditions: Making I	U	cos φ	Breaking I	U	cos φ	Occasional duty: making and breaking conditions: Making I	U	cos φ	Breaking I	U	cos φ
Electromagnets													
⩽ 72 VA	**AC-14**	-	-	-	-	-	-	6 Ie	1.1 Ue	0.7	6 Ie	1.1 Ue	0.7
> 72 VA	**AC-15**	10 Ie	Ue	0.7	Ie	Ue	0.4	10 Ie	1.1 Ue	0.3	10 Ie	1.1 Ue	0.3

d.c. supply

Typical applications	Utilisation category	Electrical durability: making and breaking conditions: Making I	U	L/R (ms)	Breaking I	U	L/R (ms)	Occasional duty: making and breaking conditions: Making I	U	L/R (ms)	Breaking I	U	L/R (ms)
Electromagnets	**DC-13**	Ie	Ue	6 P (3)	Ie	Ue	6 P (3)	1.1 Ie	1.1 Ue	6 P (3)	1.1 Ie	1.1 Ue	6 P (3)

(1) Ie ⩽ 17 A for electrical durability, Ie ⩽ 100 A for occasional duty.
(2) Ie > 17 A for electrical durability, Ie > 100 A for occasional duty.
(3) The value 6 P (in watts) is based on practical observations and is considered to represent the majority of d.c. magnetic loads up to the maximum limit of P = 50 W i.e. 6 P = 300 ms = L/R.
Above this, the loads are made up of smaller loads in parallel. The value 300 ms is therefore a maximum limit whatever the value of current drawn.

TeSys contactors
For the North American market
Conforming to UL and CSA

TeSys SK, K, D, GC, GY, GF

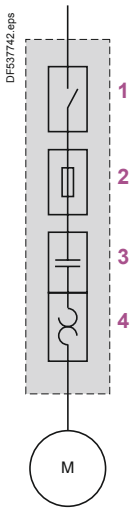

1 Motor Disconnect (Disconnect switch)
2 Motor Branch Circuit Protection (Short-circuit protection)
3 Motor Controller (Contactor)
4 Motor Overload Protection (Thermal overload relay)

Starters for the North American market

In recent years, the North American market has started to harmonise UL, CSA and ANCE standards, as well as the industrial installation codes provided by national regulations (NEC for the United States, CEC for Canada and MEC for Mexico). (1)
Major improvements, carried out by the Canena (2) are aimed at harmonising product requirements based on IEC (3) standards.
However, the North American codes use specific terminology for defining the functions of a starter.
These functions can be fulfilled by standard IEC products, accompanied by appropriate certifications.

Combination Starters

Combination Starters are the most common type of packaged motor starter. They are called "Combination" because of their structure and their combined functions. The figure opposite shows the four combined functions that constitute a complete motor starter circuit, defined as a “Motor branch circuit” by the NEC (US National Electric Code) in article 430. Standard UL508 currently gives different types of combination starter that meet the requirements of a "Motor branch circuit".

Type E, called “**self-protected combination starter**”, covers all these functions and can be controlled manually (thermal-magnetic circuit breaker) or remotely (starter-controller). Type E starters withstand faults within their declared nominal rating without sustaining damage, after which they can be put back into service. In addition, they can withstand more severe short-circuit and durability performance tests without welding or excessive wear of the contact tips.

Type F, called “**Combination motor starter**”, consists of a type E manual starter (thermal-magnetic circuit breaker) combined with a contactor.
These starters are evaluated by means of basic short-circuit tests, but are not considered as “self-protected”.

For this combination, the type E starter must be marked “Combination Motor Controller when used with ...”, followed by the reference of the load side contactor.

(1) ***UL****: Underwriters Laboratories,* ***CSA****: Canadian Standards Association,* ***ACNE****: Association of Standardization and Certification,* ***NEC****: National Electric Code,* ***CEC****: Canadian Electrical Code,* ***MEC****: Mexican Electrical Code.*
(2) ***Canena****: Council for Harmonization of Electrotechnical Standardization of North America.*
(3) ***IEC****: International Electrotechnical Commission.*

Control panels

To help users properly coordinate their motor control equipment with their distribution system in the event of a fault, article 409 of the 2005 NEC requires panel builders to list the short-circuit withstand rating of their motor control panels.
According to standard UL508A, manufacturers must use the short-circuit withstand value of the lowest rated device as the nominal withstand rating of the panel, unless the devices have been tested together for a higher coordinated rating.
The minimum "**short-circuit current rating**" (SCCR), on motor control components for horsepower ratings of 50 hp or below is 5000 A.

Using a **type E** or **type F** combination starter eliminates the coordination problems of using individual components for the "motor branch circuit protection", "motor controller" and "motor overload protection" functions.
The panel builder uses the declared short-circuit current rating for the combination starter. This value is generally higher than 5000 A.
This makes it easier to list the short-circuit current ratings and to check the compatibility of a UL508A motor control panel within a given distribution system.

Group protection

Article 430.53 of the NEC allows a single short-circuit protection device to be used for more than one motor circuit if the components used are marked and listed for such use.
Components suitable for use in group protection, known as "**motor group installations**", can be marked in one of the following two ways:

Case n° 1

The contactor and the motor overload relay are both listed as suitable for group installation.
An inverse time circuit breaker can be used as the short-circuit protection device if it is also listed as suitable for group installation.
The panel builder must therefore make sure that the short-circuit protection device selected (fuses or inverse time circuit breaker) does not exceed the value allowed by article 430.40 for the smallest overload relay used in the circuit.
Once these conditions have been met, the panel builder can reduce the size of the conductor connecting the short-circuit protection device to the individual motor contactor/overload relay, to one third of the size of the upstream circuit conductor supplying the protection device.
The panel builder must limit the length of the motor starter conductor (connecting the short-circuit protection device to the motor contactor/overload relay) to a maximum of 7.6 m (25 feet).

Case n° 2

The motor contactor and overload relay are listed as suitable for "**tap conductor protection**" in group installations.
This category allows the panel designer to reduce the size of the conductor connecting the short-circuit protection device to the individual motor contactor/overload relay, to one tenth of the size of the upstream circuit conductor supplying the protection device.
The designer must limit the length of this conductor to a maximum of 3.05 m (10 feet).
In both cases, the supply circuits must not be less than 125 % of the connected motor FLA (Full Load Amps) rating.
For panel builders, using **type F** combination starters in group installations simplifies group motor considerations.
Each starter is a fully coordinated motor branch circuit.
The panel builder follows the same NEC requirements for sizing the supply conductors as those required for single motor branch circuits.
The size of the supply conductors can be reduced in accordance with the specifications of article 430.28.
This allows the same flexibility in conductor sizing as that offered in article 430.53 (D), without a requirement to check the short-circuit protection rating marked on the components and the overload relay limit.
A UL508A panel does not need a short-circuit protection device when each motor starter installed is a **type F**.
The upstream short-circuit protection device supplying the starter protects the panel. The panel builder only has to consider the panel/enclosure disconnect requirements specified by the NEC or local codes.

High power contactors
TeSys F, V, FG, CR1F

Contactors – TeSys F, V, FG, CR1F

Type of product	Range		Pages
Contactors for AC-3 applications TeSys F	From **115** to **1000** A	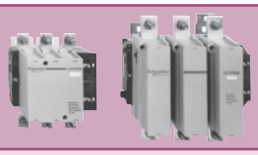	B9/2
Contactors for AC-1 applications TeSys F	From **200** to **2600** A		B9/3
Vacuum contactors– 1500 V TeSys V	From **160** to **610** A - **AC-3** From **160** to **630** A - **AC-1**		B9/4
Shockproof contactors TeSys FG	From **150** to **630** A - **AC-3**		B9/6
Magnetic latching contactors TeSys CR1F	From **150** to **630** A - **AC-3**		B9/7
Reversing pre-assembled contactors for AC-3 applications TeSys F	From **115** to **265** A - **AC-3**		B9/8
Changeover pre-assembled contactor pairs for AC-1 applications TeSys F	From **200** to **350** A - **AC-1**		B9/9
Auxiliary contact blocks Accessories – spare parts - delayed opening devices TeSys F			B9/10
Coils TeSys F			B9/17
Accessories, coils for shockproof and magnetic latching contactors TeSys FG, TeSys CR1F			B9/27
Accessories for reversing and changeover contactor assemblies TeSys LA9F			B9/36

Technical Data for Designers B9/45

TeSys contactors

TeSys F contactors for motor control in utilisation category AC-3 (115 to 1000 A)

Control circuit: a.c. or d.c. supply

DF5260091R.eps



LC1 F225

DF5260092R.eps



LC1 F630

3-pole contactors

Standard power ratings of 3-phase motors 50-60 Hz in category AC-3							Rated operational current in AC-3	Basic reference, to be completed by adding the voltage code (2)	Weight
220 V 230 V	380 V 400 V	415 V	440 V	500 V	660 V 690 V	1000 V	440 V up to	Screw fixing, cabling (1)	
kW	kW	kW	kW	kW	kW	kW	A		kg
30	55	59	59	75	80	65	115	**LC1F115●●**	3.430
40	75	80	80	90	100	65	150	**LC1F150●●**	3.430
55	90	100	100	110	110	100	185	**LC1F185●●**	4.650
63	110	110	110	129	129	100	225	**LC1F225●●**	4.750
75	132	140	140	160	160	147	265	**LC1F265●●**	7.440
100	160	180	200	200	220	160	330	**LC1F330●●**	8.600
110	200	220	250	257	280	185	400	**LC1F400●●**	9.100
147	250	280	295	355	335	335	500	**LC1F500●●**	11.350
200	335	375	400	400	450	450	630	**LC1F630●●**	18.600
220	400	425	425	450	475	450	780	**LC1F780●●**	39.500
250	450	450	450	450	475	450	800	**LC1F800●●**	18.750
315	560	630	670	–	–	–	1000	**LC1F1000●●**	31.000

Note: *auxiliary contact blocks, modules and accessories: see pages B9/10 to B9/27.*

(1) Power terminals can be protected against direct finger contact by the addition of shrouds, to be ordered separately, except on contactors LC1 F780 (see page B9/14).

(2) Standard control circuit voltages (for other voltages, please consult your Regional Sales Office).

Volts ∼	24	48	110	115	120	208	220	230	240	380	400	415	440
LC1 F115…F225													
50 Hz (coil LX1)	B5	E5	F5	FE5	–	–	M5	P5	U5	Q5	V5	N5	–
60 Hz (coil LX1)	–	E6	F6	–	G6	L6	M6	–	U6	Q6	–	–	R6
40…400 Hz (coil LX9)	–	E7	F7	FE7	G7	L7	M7	P7	U7	Q7	V7	N7	R7
LC1 F265…F330													
40…400 Hz (coil LX1)	B7	E7	F7	FE7	G7	L7	M7	P7	U7	Q7	V7	N7	R7
LC1 F400…F630, F1250													
40…400 Hz (coil LX1)	–	E7	F7	FE7	G7 (3)	L7	M7	P7	U7	Q7	V7	N7	R7
LC1 F780													
40…400 Hz (coil LX1)	–	–	F7	FE7	F7	L7	M7	P7	U7	Q7	V7	N7	R7
LC1 F800													
40…400 Hz (coil LX4) (4)	–	–	FW	FW	FW	–	MW	MW	MW	QW	QW	QW	–
LC1 F1000, F1400, F1700, F2100, F2600													
40...400 Hz (coil LX1F)	–	–	F7	–	G7	–	M7	P7	U7	Q7	V7	N7	R7

Volts ⎓	24	48	110	125	220	230	250	400	440
LC1 F115…F330									
(coil LX4 F)	BD	ED	FD	GD	MD	MD	UD	–	RD
LC1 F400…F630, F1250									
(coil LX4 F)	–	ED	FD	GD	MD	–	UD	–	RD
LC1 F780, LC1 F1000, F1400, F1700, F2100, F2600									
(coil LX4 F)	–	–	FD	GD	MD	–	UD	–	RD
LC1 F800									
(coil LX4 F)	–	–	FW	FW	MW	MW	–	QW	–

*(3) F7 for **LC1F630**.*

(4) Coil LX4 F8●● + rectifier DR5TE●●.

TeSys contactors

TeSys F contactors for motor control in utilisation category AC-1 (200 to 2600 A)

Control circuit: a.c. or d.c. supply

TeSys F

DF526093R.eps



LC1 F1854

DF526094R.eps



LC1 F4004

DF526095R.eps



LC1 F6304

DF526096R.eps



LC1 F1700

DF526097R.eps



LC1 F2100

PB114812R.eps



LC1 F2600

2, 3 or 4-pole contactors

Maximum current in AC-1 (θ ≤ 40 °C)	Number of poles	Basic reference, to be completed by adding the voltage code [2] / Screw fixing, cabling [1]	Weight
A			kg
200	3	**LC1F115●●**	3.430
	4	**LC1F1154●●**	3.830
250	3	**LC1F150●●**	3.430
	4	**LC1F1504●●**	3.830
275	3	**LC1F185●●**	4.650
	4	**LC1F1854●●**	5.450
315	3	**LC1F225●●**	4.750
	4	**LC1F2254●●**	5.550
350	3	**LC1F265●●**	7.440
	4	**LC1F2654●●**	8.540
400	3	**LC1F330●●**	8.600
	4	**LC1F3304●●**	9.500
500	2	**LC1F4002●●**	8.000
	3	**LC1F400●●**	9.100
	4	**LC1F4004●●**	10.200
700	2	**LC1F5002●●**	9.750
	3	**LC1F500●●**	11.350
	4	**LC1F5004●●**	12.950
1000	2	**LC1F6302●●**	15.500
	3	**LC1F630●●**	18.600
	4	**LC1F6304●●**	21.500
1260	3	**LC1F1250●●**	19.000
1400	3	**LC1F1400●●**	29.000
1600	3	**LC1F780●●**	39.500
	4	**LC1F7804●●**	48.000
1700	3	**LC1F1700●●**	30.000
2100 [3]	3	**LC1F2100●●**	31.000
2600 [4]	3	**LC1F2600●●**	36.000

Note: *auxiliary contact blocks, modules and accessories: see pages B9/10 to B9/27.*

*(1) Power terminals can be protected against direct finger contact by the addition of shrouds, to be ordered separately (except **LC1 F780, LC1 F1250, LC1 F1400, LC1 F1700 and LC1 F2100**), see page "TeSys contactors", page B9/14.*
(2) Standard control circuit voltages, see previous page.
*(3) With set of right-angled connectors **LA9 F2100** (see page B9/13).*
*(4) With set of right-angled connectors **LA9 F2600** (see page B9/13).*

Selection: pages A6/24 to A6/44
References: pages B9/2 and B9/3
Dimensions: pages B9/54 to B9/56
Schemes: page B9/61

TeSys contactors

TeSys V 3-pole vacuum contactors and reversing contactors AC-3 (160 to 610 A)

Power and control circuits a.c. supply

PF526336R.eps



LC1 V320

Vacuum contactors

Standard power ratings 50/60 Hz in category AC-3					Rated operational current Ie		Instantaneous auxiliary contacts		Control circuit voltage (50/60 Hz)	Basic reference (1)	Weight
230 V	400 V	525 V	690 V	1000 V	AC-3 400 V up to	AC-1					
kW	kW	kW	kW	kW	A	A					kg
45	75	110	150	200	160	160	2	1	(1)	**LC1V160●●**	3.800
90	160	220	280	400	320	320	1	1	(1)	**LC1V320●●**	10.500
160	300	400	560	800	610	630	1	1	(1)	**LC1V610●●**	13.000

510227.eps

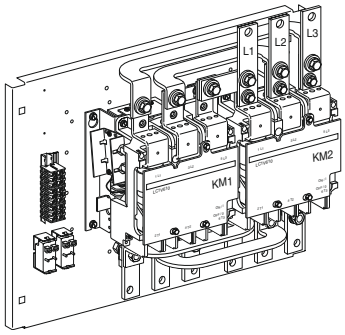

LC2 V610

Reversing vacuum contactors

The reversing contactor range comprises :

- for 160 A rating, a kit with set of power connections allowing assembly of the starter
- for 320 and 610 A ratings, a complete starter, ready for use.

Standard power ratings 50/60 Hz in category AC-3					Rated operational current Ie		Instantaneous auxiliary contacts		Control circuit voltage (50/60 Hz)	Basic reference (1)	Weight
230 V	400 V	525 V	690 V	1000 V	AC-3 400 V up to	AC-1					
kW	kW	kW	kW	kW	A	A					kg
45	75	110	150	200	160	160	2	1	–	**LA9V974** (2)	1.200
90	160	220	280	400	320	320	1	1	110-120 V	**LC2V320FE7**	30
									220-240 V	**LC2V320P7**	30
									380-415 V	**LC2V320V7**	30
160	300	400	560	800	610	630	1	1	110-120 V	**LC2V610FE7**	36
									220-240 V	**LC2V610P7**	36

510213.eps

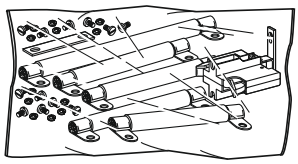

LA9 V974

(1) Basic reference; add code indicating control circuit voltage.
Standard control circuit voltages:

Volts 50/60 Hz	110…120	220…240	380…415	440…480	550…600
Item	FE7	P7	V7	R7	X7

(2) Kit containing a mechanical interlock, a set of power connections and a fixing plate.
To build a complete reversing contactor, order contactors LC1 V160●● separately.

TeSys contactors

TeSys V 3-pole vacuum contactors and reversing contactors AC-3 (160 to 610 A)

Power and control circuits a.c. supply

500308_1.eps

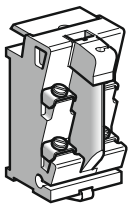

LA1 VN11

500310.eps

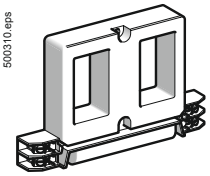

LX1 V320●●

Instantaneous auxiliary contact blocks (1)

Number of contacts	Maximum number of blocks per contactor	Auxiliary contacts		Reference
2	4	1	1	**LA1VN11**
		–	2	**LA1VN02**
		2	–	**LA1VN20**
		1	1	**LA1VN11X** *(2)*

50/60 Hz coils

Rated voltage	Voltage code	Reference
V		
For contactors LC1 V160		
110…120	FE7	**LX1V160FE7**
220…240	P7	**LX1V160P7**
380…415	V7	**LX1V160V7**
440…480	R7	**LX1V160R7**
550…600	X7	**LX1V160X7**
For contactors LC1 V320		
110…120	FE7	**LX1V320FE7**
220…240	P7	**LX1V320P7**
380…415	V7	**LX1V320V7**
440…480	R7	**LX1V320R7**
550…600	X7	**LX1V320X7**
For contactors LC1 V610		
110…120	FE7	**LX1V610FE7**
220…240	P7	**LX1V610P7**
380…415	V7	**LX1V610V7**
440…480	R7	**LX1V610R7**
550…600	X7	**LX1V610X7**

(1) LC1 V160: auxiliary contact blocks mounted at the top of the contactor, with no change to the overall dimensions.
LC1 V320 or LC1 V610: 2 auxiliary contact blocks mounted on the RH and LH side of the contactor, with no change to the overall dimensions.
(2) For LC1 V160: 1 N/C contact for the coil + 1 N/O contact.

TeSys contactors

TeSys FG 3-pole shockproof contactors
For motor and distribution circuits control
AC-3 (150 to 630 A)
Control circuit: a.c. supply

PF526281R.eps

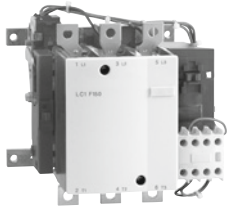

LC1 FG150

PF526282R.eps

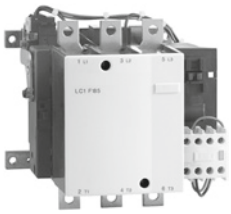

LC1 FG185

PF526283R.eps

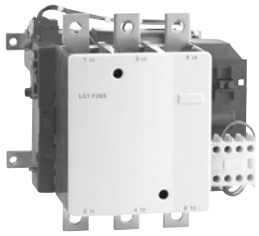

LC1 FG265

3-pole shockproof contactors

Standard power ratings of 3-phase motors 50-60 Hz in category AC-3							Rated operational current in cat. AC-3, 440 V/AC-1 up to	(1) DCN ref.	Basic reference, to be completed by adding the voltage code (3) Screw fixing, cabling (2)	Weight
220 V 230 V	380 V 400 V	415 V	440 V	500 V	660 V 690 V	1000 V				
kW	kW	kW	kW	kW	kW	kW	A			kg
40	75	80	80	90	100	65	150/250	**CR182**	**LC1FG150●●**	3.430
55	90	100	100	110	110	100	185/275	**CR242**	**LC1FG185●●**	4.650
75	132	140	140	160	160	147	265/350	**CR302**	**LC1FG265●●**	7.440
110	200	220	250	257	280	185	400/500	**CR432**	**LC1FG400●●**	9.100
147	250	280	295	355	335	335	500/700	**CR582**	**LC1FG500●●**	11.350
200	335	375	400	400	450	450	630/1000	**CR852**	**LC1FG630●●**	18.600

Note: *these contactors have instantaneous auxiliary contact blocks with 2 N/O contacts, 1 N/C contact and one coil maintaining contact.*

(1) Devices approved by the DCN (French naval shipyard department) and authorised for on-board use.
(2) Power terminals can, if required, be protected against direct finger contact by the addition of shrouds, to be ordered separately. See page B9/54.
(3) Standard control circuit voltages (for other voltages, please consult your Regional Sales Office):

Volt ∼		48	110	115	120 (1)	208	220	230	240	380	400	415	440
LC1 FG 150…FG185	50 Hz (coil LX1)	E5	F5	F5	–	–	M5	P5	U5	Q5	V5	N5	–
	60 Hz (coil LX1)	E6	F6	–	–	L6	M6	–	U6	Q6	–	–	R6
	50/60 Hz (coil LX9)	E7	F7	F7	G6	L7	M7	P7	U7	Q7	V7	N7	R7
LC1 FG265	40…400 Hz (coil LX1)	E7	F7	F7	G7	L7	M7	P7	U7	Q7	V7	N7	R7
LC1 FG400…FG500	40…400 Hz (coil LX1)	–	F7	F7	G7	L7	M7	P7	U7	Q7	V7	N7	R7
LC1 FG630	40…400 Hz (coil LX1)	–	F7	F7	F7	L7	M7	P7	U7	Q7	V7	N7	R7

Note: *auxiliary contact blocks, accessories and spare coils, see pages B9/27 to B9/29.*

TeSys contactors

TeSys F magnetic latching contactors
AC-3 (150 to 630 A)
Control circuit: a.c. or d.c. supply

TeSys CR1F

PF526337R.eps



CR1 F1854

PF526338R.eps



CR1 F500

Maximum thermal current in category AC-1 40 °C	Rated operational current in category AC-3 (440 V max)	Number of poles	Instantaneous auxiliary contacts		Basic reference, to be completed by adding the voltage code (1)	Weight
A	A					kg
250	150	3	–	–	**CR1F150●●**	3.500
		4	–	–	**CR1F1504●●**	3.800
275	185	3	–	–	**CR1F185●●**	4.600
		4	–	–	**CR1F1854●●**	5.400
350	265	3	–	–	**CR1F265●●**	7.400
		4	–	–	**CR1F2654●●**	8.500
500	400	3	–	–	**CR1F400●●**	9.100
		4	–	–	**CR1F4004●●**	10.200
700	500	3	–	–	**CR1F500●●**	11.300
		4	–	–	**CR1F5004●●**	12.900
1000	630	3	–	–	**CR1F630●●**	18.600
		4	–	–	**CR1F6304●●**	21.500

Note: *accessories, replacement parts and spare coils, see pages B9/33 to B9/35.*

(1) *Standard control circuit voltages: see page B9/35.*

TeSys contactors

TeSys F reversing contactors for motor control in utilisation category AC-3 (115 to 265 A), pre-assembled

Control circuit: a.c. or d.c. supply

DB402428.eps



LC2 F115

3-pole reversing contactors (horizontally mounted) (1)

Pre-wired power connections

Standard power ratings of 3-phase motors 50/60 Hz in category AC-3							Operational current in AC-3	Maximum operational voltage	Contactors supplied without coil (2) Complete reference	Weight
220 V 230 V	380 V 400 V	415 V	440 V	500 V	660 V 690 V	1000 V	440 V up to		Fixing, cabling (3)	
kW	kW	kW	kW	kW	kW	kW	A	V		kg
30	55	59	59	75	80	65	115	1000	**LC2F115**	7.560
40	75	80	80	90	100	65	150	1000	**LC2F150**	7.560
55	90	100	100	110	110	100	185	1000	**LC2F185**	10.100
63	110	110	110	129	129	100	225	1000	**LC2F225**	14.200
75	132	140	140	160	160	147	265	1000	**LC2F265**	16.480

Accessories (to be ordered separately)

Description	For reversing contactors	Quantity required	Reference
Power terminal protection shrouds	LC2 F115	2	**LA9F701**
	LC2 F150, F185	2	**LA9F702**
	LC2 F225, F265	2	**LA9F703**
Auxiliary contact blocks and add-on modules	–	–	See pages B9/10 to B9/14

*(1) Fitted with a mechanical interlock without electrical interlocking. Order separately 2 auxiliary contact blocks **LADN●1** to obtain electrical interlocking between the 2 contactors, see page B9/11. For accessories, see pages B9/12 to B9/14.*

(2) Coils to be ordered separately:
- a.c. supply, see pages B9/2, B9/17 and B9/18,
- d.c. supply, see pages B9/2 and B9/23.

(3) Screw fixing.
Power terminals can be protected against direct finger contact by the addition of shrouds, to be ordered separately, see above.

Selection: pages A6/24 to A6/44
Dimensions: pages B9/100 to B9/102
Schemes: page B9/103

TeSys contactors

TeSys F changeover contactors for motor control in utilisation category AC-1 (200 to 350 A), pre-assembled

Control circuit: a.c. or d.c. supply

DF526098R.eps



LC2 F1854

4-pole changeover contactor pairs (horizontally mounted) (1)

Pre-wired power connections

Utilisation category AC-1 Non inductive loads Maximum operational current θ < 40 °C	Maximum operational voltage	Contactors supplied without coil (2) Complete reference Fixing, cabling (3)	Weight
A	V		kg
200	1000	**LC2F1154**	8.860
250	1000	**LC2F1504**	8.860
275	1000	**LC2F1854**	12.100
315	1000	**LC2F2254**	15.200
350	1000	**LC2F2654**	19.480

Accessories (to be ordered separately)

Description	For changeover pairs	Quantity required	Reference
Power terminal protection shrouds	LC2 F1154	2	**LA9F706**
	LC2 F1504, F1854	2	**LA9F707**
	LC2 F2254, F2654	2	**LA9F708**
Auxiliary contact blocks and add-on modules	–	–	See pages B9/10 to B9/14

*(1) Fitted with a mechanical interlock without electrical interlocking. Order separately 2 auxiliary contact blocks **LAD N●1** to obtain electrical interlocking between the 2 contactors, see page B9/11. For accessories, see pages B9/12 to B9/14.*

(2) Coils to be ordered separately:
- a.c. supply, B9/2, B9/17 and B9/18,
- d.c. supply, see pages B9/2 and B9/23.

(3) Screw fixing.
Power terminals can be protected against direct finger contact by the addition of shrouds, to be ordered separately, see above.

DB404210.eps

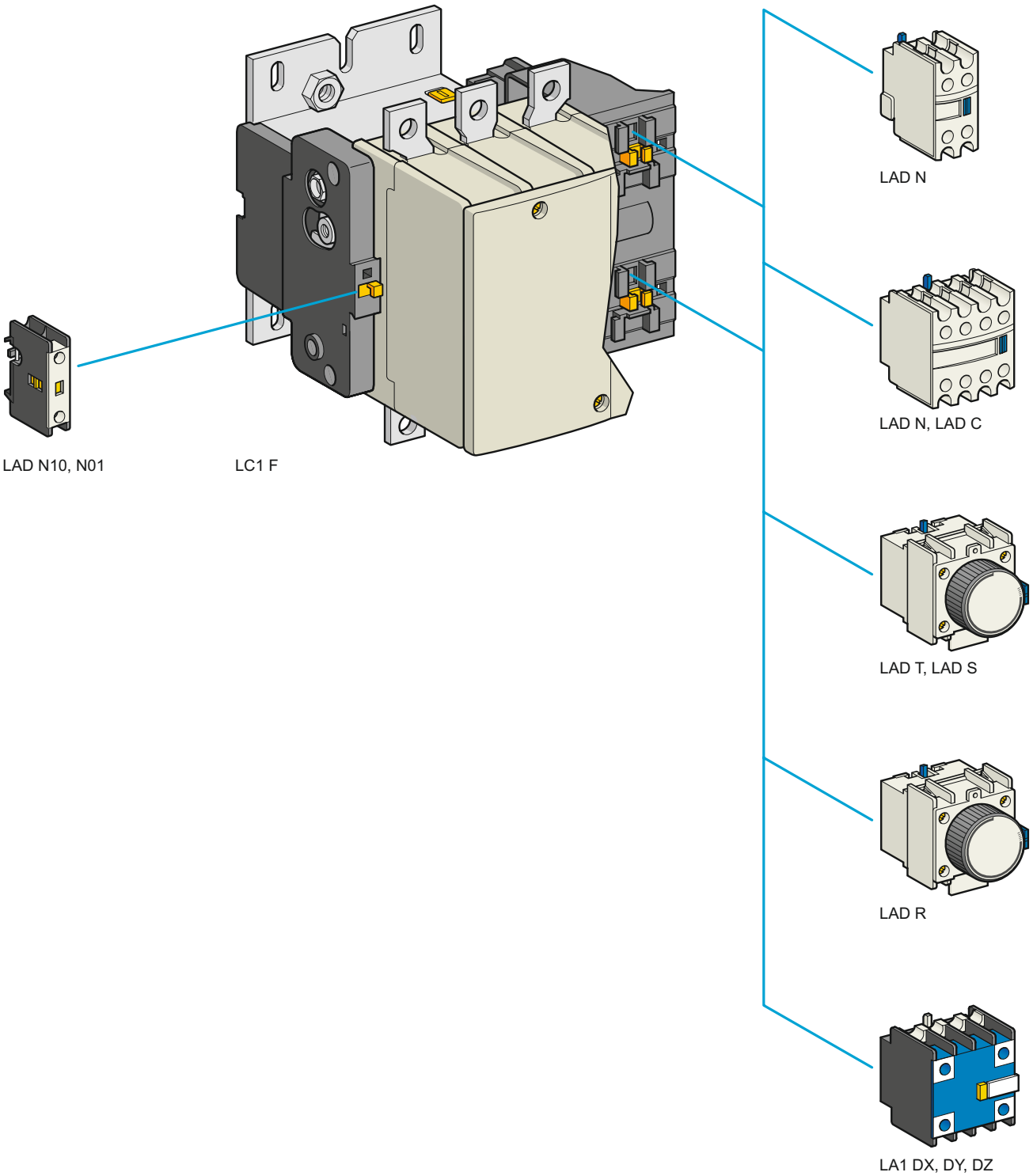

TeSys contactors
TeSys F contactors
Auxiliary contact blocks

Instantaneous auxiliary contact blocks

For use in normal operating environments

Number of contacts	Maximum number of blocks per contactor Clip-on mounting	Composition				Reference
1	1	–	–	1	–	**LADN10**
		–	–	–	1	**LADN01**
2	2	–	–	1	1	**LADN11**
		–	–	2	–	**LADN20**
		–	–	–	2	**LADN02**
4	2	–	–	2	2	**LADN22**
		–	–	1	3	**LADN13**
		–	–	4	–	**LADN40**
		–	–	–	4	**LADN04**
		–	–	3	1	**LADN31**
		–	–	2	2 (1)	**LADC22**

With terminal referencing conforming to EN 50012

2	2	–	–	1	1	**LADN11P**
		–	–	1	1	**LADN11G**
4	2	–	–	2	2	**LADN22P**
		–	–	2	2	**LADN22G**

Instantaneous auxiliary contact blocks for connection by lugs

This type of connection is not possible for blocks with 1 contact or blocks with dust and damp protected contacts. For all other instantaneous auxiliary contact blocks, add the figure **6** to the end of the references selected above. Example: **LAD N11** becomes **LAD N116**.

Instantaneous auxiliary contact blocks with dust and damp protected contacts

Recommended for use in particularly harsh industrial environments

Number of contacts	Maximum number of blocks per contactor Clip-on mounting	Composition				Reference
2	2	2	–	–	–	**LA1DX20**
		2	2 (2)	–	–	**LA1DY20**
4	2	2	–	2	–	**LA1DZ40**
		2	–	1	1	**LA1DZ31**

Time delay auxiliary contact blocks

Number of contacts	Maximum number of blocks per contactor Clip-on mounting	Time delay Type	Range s	Reference
1 N/O + 1 N/C	2	On-delay	0.1…3 (3)	**LADT0**
			0.1…30	**LADT2**
			10…180	**LADT4**
			1…30 (4)	**LADS2**
		Off-delay	0.1…3 (3)	**LADR0**
			0.1…30	**LADR2**
			10…180	**LADR4**

(1) Including 1 N/O + 1 N/C make before break.
(2) Device fitted with 4 earth screen continuity terminals.
(3) With extended scale from 0.1 to 0.6 s.
(4) With switching time of 40 ms ±15 ms between opening of the N/C contact and closing of the N/O contact.

High power contactors

Presentation: page B9/10
Schemes: page B9/61

TeSys contactors

TeSys F contactors

Suppressor blocks and connection accessories

TeSys F

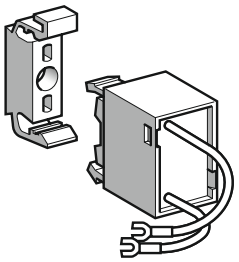

LA9 D09981 LA4 F●●●

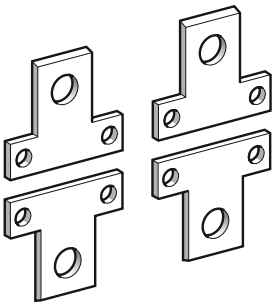

LA9 F●602

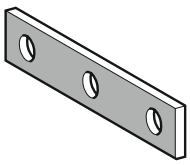

LA9 F●601



DZ3 FA3

Suppressor blocks

RC circuits (resistor-capacitor)

- Effective protection for circuits highly sensitive to "high frequency" interference. For use only in cases where the voltage is virtually sinusoidal, i.e. less than 5 % total harmonic distortion.
- Voltage limited to 3 Uc max. and oscillating frequency limited to 400 Hz max.
- Slight increase in drop-out time (1.1 to 1.3 times the normal time).

Mounting	Uc		Reference
Clip-on mounting on all ratings and all a.c. coils.	∼	24…48 V	**LA4FRCE**
		50…110 V	**LA4FRCF**
		127…240 V	**LA4FRCP**
		265…415 V	**LA4FRCV**
Suppressor block bracket			**LA9D09981**

Varistors (peak limiting)

- Protection provided by limiting the transient voltage to 2 Uc max.
- Maximum reduction of transient voltage peaks.

Clip-on mounting on all ratings and all coils.	∼ or ⎓	24…48 V	**LA4FVE**
		50…110 V	**LA4FVF**
		127…240 V	**LA4FVP**
		265…415 V	**LA4FVV**

Diodes

- No overvoltage or oscillating frequencies.
- Increase in drop-out time (3 to 4 times the normal time).
- Polarised component.

Clip-on mounting on all ratings and all d.c. coils.	⎓	24…48 V	**LA4FDE**
		55…110 V	**LA4FDF**
		125…250 V	**LA4FDP**
		280…440 V	**LA4FDV**

Bidirectional peak limiting diodes (transil)

- Protection provided by limiting the transient voltage to between 2 and 2.5 times Uc max.
- Maximum reduction of transient voltage peaks.

Clip-on mounting on all ratings and all coils.	∼ or ⎓	24…48 V	**LA4FTE**
		50…110 V	**LA4FTF**
		127…240 V	**LA4FTP**
		265…415 V	**LA4FTV**

Connection accessories

For use on 4-pole contactors	Set of 4 links Set reference	Weight kg
Links for parallel connection of poles (in pairs)		
LC1 F1154	**LA9FF602**	0.200
LC1 F1504, F1854	**LA9FG602**	0.350
LC1 F2254, F2654, F3304, F4004	**LA9FH602**	1.000
LC1 F5004	**LA9FK602**	1.750
LC1 F6304	**LA9FL602**	3.000
Links for "star" connection of 3 poles		
LC1 F115	**LA9FF601**	0.035
LC1 F150, F185	**LA9FG601**	0.050
LC1 F225, F265, F330, F400	**LA9FH601**	0.120
LC1 F500	**LA9FK601**	0.180
LC1 F630, F800	**LA9FL601**	0.550

Control circuit voltage take-off from power terminals			
For use with contactors	**Mounted on bolt size**	**Sold in lots of**	**Unit reference**
LC1 F115	M6	10	**DZ3FA3**
LC1 F150, F185	M8	10	**DZ3GA3**
LC1 F225…F500	M10	10	**DZ3HA3**
LC1 F630, F800	M12	10	**DZ3JA3**

Dimensions:
pages B9/57 and B9/58

TeSys contactors
TeSys F contactors
Connection accessories

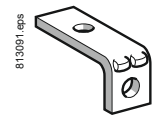

LA9 F●981

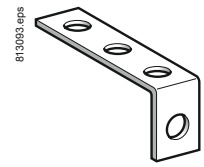

LA9 F●979

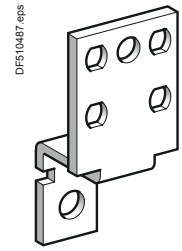

LA9 FL980

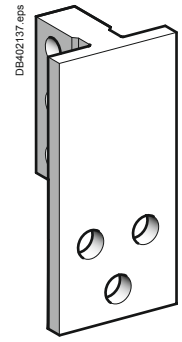

LA9 F1250

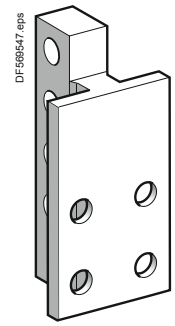

LA9 F2100

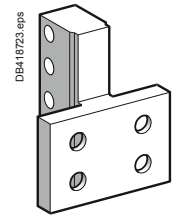

LA9 F2600

Right-angled connectors

For contactors or thermal overload relays

For use with		With connector plates		Set of 3 connectors	
Contactors	Thermal overload relays (1)	Width	Type	Set reference	Weight kg
LC1 F115	LR9 F5●67, LR9 F67	15 mm	Rear	**LA9FF981**	0.060
			Side	**LA9FF979**	0.240
			Large surface area	**LA9FF980**	0.150
LC1 F150, F185	LR9 F5●69, F5●71, LR9 F69, F71	20 mm	Rear	**LA9FG981**	0.080
			Side	**LA9FG979**	0.350
			Large surface area	**LA9FG980**	0.200
LC1 F225, F265, F330, F400	LR9 F7●75,LR9 F75	25 mm	Rear	**LA9FJ981**	0.430
			Side	**LA9FJ979**	0.750
			Large surface area	**LA9FJ980**	0.490
LC1 F500	LR9 F7●79, F7●81, LR9 F79, F81	30 mm	Rear	**LA9FK981**	0.480
			Side	**LA9FK979**	0.920
			Large surface area	**LA9FK980**	0.800
LC1 F630, F800	LR9 F7●81,LR9 F81	40 mm	Rear	**LA9FL981**	1.210
			Side	**LA9FL979**	2.570
			Large surface area	**LA9FL980**	3.190

For use with	With connector plates		Set of 6 connectors	
Contactors	Width	Type	Set reference	Weight kg
LC1 F1250	60 mm	Rear	**LA9F1250**	5.480
LC1 F1000, F1400, F1700, F2100	60 mm	Rear	**LA9F2100**	9.550
LC1 F2600	100 mm	Rear	**LA9F2600**	4.380

Connection accessories

For reversing contactors or "star-delta" contactors combined with a thermal overload relay

For use with		Width of connector plates	Set of 3 busbars
Contactors	Thermal overload relays (1)		Set reference
LC1 F115	LR9 F5●57, F5●63 LR9 F5●67, F5●69 LR9 F69, F71	15 mm	**LA7F401**
LC1 F150 and F185	LR9 F5●57, F5●63	20 mm	**LA7F402**
LC1 F185	LR9 F5●71, LR9 F71	25 mm	**LA7F407**
LC1 F225 and F265	LR9 F5●71, LR9 F71	25 mm	**LA7F403**
	LR9 F7●75, F7●79 LR9 F75, F79	25 mm	**LA7F404**
LC1 F330 and F400	LR9 F7●75, F7●79 LR9 F75, F79	25 mm	**LA7F404**
LC1 F400	LR9 F7●81,LR9 F81	25 mm	**LA7F404**
LC1 F500	LR9 F7●75, F7●79 LR9 F7●81 LR9 F75, F79, F81	30 mm	**LA7F405**
LC1 F630, F800	LR9 F7●81, LR9 F81	40 mm	**LA7F406**

(1) For protection relays class 10, replace the ● with a 3 and for class 20, replace the ● with a 5.

High power contactors

Dimensions:
pages B9/57 and B9/58

TeSys contactors
TeSys F contactors
Accessories

TeSys F

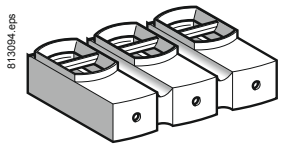

LA9 F103

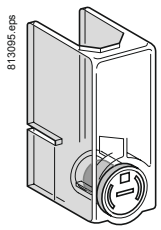

LA9 F701

Insulated terminal blocks

For use on 3-pole contactors	Connection	Tightening tool	Set of 2 blocks Set reference
LC1 F115, F150, F185	1 x 16…150 mm² or 2 x 16…95 mm²	4 mm hexagonal socket key	**LA9F103**

Power terminal protection shrouds

For use on 2, 3 and 4-pole contactors	Number of shrouds per set	Set reference
LC1 F115	6	**LA9F701**
LC1 F150, F185	6	**LA9F702**
LC1 F225, F265, F330, F400 and F4002 F500 and F5002	6	**LA9F703**
LC1 F630, F6302 and F800	6	**LA9F704**
LC1 F1154	8	**LA9F706**
LC1 F1504 and F1854	8	**LA9F707**
LC1 F2254, F2654, F3304, F4004, F5004	8	**LA9F708**
LC1 F6304	8	**LA9F709**

TeSys contactors
TeSys F contactors
Accessories

TeSys F

813096.eps

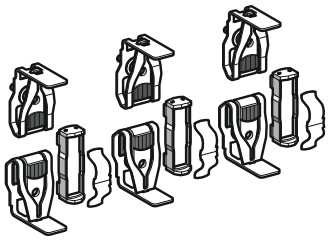

LA5 FG431

DF569555.eps

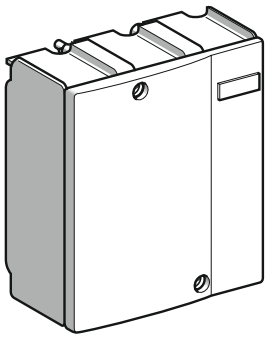

LA5 F40050

DF569556.eps

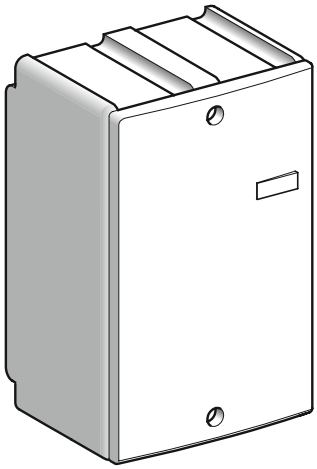

LA5 F210050

Sets of contacts

Per pole: 2 fixed contacts, 1 moving contact , 2 deflectors, 1 back-plate, clamping screws and washers.

For contactor	Type	Replacement for	Reference	Weight kg
2-pole	LC1 F4002	2 poles	**LA5F400802**	1.350
	LC1 F5002	2 poles	**LA5F500802**	1.950
	LC1 F6302	2 poles	**LA5F630802**	4.700
	LC1 F6302S011	2 poles	**LA5F630802S011**	4.800
3-pole	LC1 F115. F150	3 poles	**LA5FF431**	0.270
	LC1 F185. F225	3 poles	**LA5FG431**	0.350
	LC1 F265	3 poles	**LA5FH431**	0.660
	LC1 F330. F400	3 poles	**LA5F400803**	2.000
	LC1 F500	3 poles	**LA5F500803**	2.950
	LC1 F630	3 poles	**LA5F630803**	6.100
	LC1 F780	1 pole	**LA5F780801** (1)	4.700
		3 poles	**LA5F780803**	13.200
	LC1 F800	3 poles	**LA5F800803**	6.100
	LC1 F630S011	3 poles	**LA5F630803S011**	6.200
	LC1 F1000		(2)	
4-pole	LC1 F1504. F1154	4 poles	**LA5FF441**	0.360
	LC1 F1854. F2254	4 poles	**LA5FG441**	0.465
	LC1 F2654	4 poles	**LA5FH441**	0.880
	LC1 F3304. F4004	4 poles	**LA5F400804**	2.700
	LC1 F5004	4 poles	**LA5F500804**	3.900
	LC1 F6304	4 poles	**LA5F630804**	8.150
	LC1 F7804	1 pole	**LA5F780801** (1)	4.700
		4 poles	**LA5F780804**	17.300
	LC1 F6304S011	4 poles	**LA5F630804S011**	8.400

Arc chambers

For contactor	Type	Replacement for	Reference	Weight kg
2-pole	LC1 F4002	2 poles	**LA5F400250**	0.870
	LC1 F5002	2 poles	**LA5F500250**	1.250
	LC1 F6302	2 poles	**LA5F630250**	2.100
	LC1 F6302S011	2 poles	**LA5F630250**	2.100
3-pole	LC1 F115	3 poles	**LA5F11550**	0.490
	LC1 F150	3 poles	**LA5F15050**	0.490
	LC1 F185	3 poles	**LA5F18550**	0.670
	LC1 F225	3 poles	**LA5F22550**	0.670
	LC1 F265	3 poles	**LA5F26550**	0.920
	LC1 F330	3 poles	**LA5F33050**	1.300
	LC1 F400	3 poles	**LA5F40050**	1.300
	LC1 F500	3 poles	**LA5F50050**	1.850
	LC1 F630	3 poles	**LA5F63050**	3.150
	LC1 F780	1 pole	**LA5F780150** (1)	2.100
	LC1 F800	3 poles	**LA5F80050**	3.150
	LC1 F1000	6 poles	**LA5F100050**	3.750
	LC1 F630S011	3 poles	**LA5F63050**	3.150
	LC1 F1250	3 poles	**LA5F125050**	3.150
	LC1 F1400	6 poles	**LA5F140050** (3)	3.750
	LC1 F1700	6 poles	**LA5F170050** (3)	3.750
	LC1 F2100	6 poles	**LA5F210050** (3)	3.750
4-pole	LC1 F1154	4 poles	**LA5F115450**	0.660
	LC1 F1504	4 poles	**LA5F150450**	0.660
	LC1 F1854	4 poles	**LA5F185450**	0.910
	LC1 F2254	4 poles	**LA5F225450**	1.000
	LC1 F2654	4 poles	**LA5F265450**	1.220
	LC1 F3304	4 poles	**LA5F330450**	1.740
	LC1 F4004	4 poles	**LA5F400450** (4)	1.740
	LC1 F5004	4 poles	**LA5F500450** (4)	2.500
	LC1 F6304	4 poles	**LA5F630450** (5)	4.200
	LC1 F7804	1 pole	**LA5F780150** (1)	2.100
	LC1 F6304S011	4 poles	**LA5F630450**	4.200

(1) Comprising 2 identical items per pole.
(2) Please consult us
(3) Comprising three 2-pole arc chambers.
(4) Comprising two 2-pole arc chambers.
(5) Comprising single-pole arc chambers.

TeSys contactors
Capacitive delayed opening devices
For TeSys F contactors

PF511116-32-MR eps



LAZ R90F

References

These devices prevent inadvertent opening of a contactor in the event of a brief volt drop or momentary supply failure.

For contactors with d.c. coil supply				
For use with contactor		Corresponding delayed opening device		
Type	With coil	Supply voltage 50/60 Hz	Non-adjustable delay time (Tr)	Reference
		V	s	
LC1 F115 or LC1 F150	LX4 FF110	110	2…5	**LAZR90F**
	LX4 FF125	127	2…5	**LAZR90F**
	LX4 FF220	220	2…5	**LAZR90M**
	LX4 FF250	240	2…5	**LAZR90M**
	LX4 FF375	380…415	2…5	**LAZR90Q**
	LX4 FF440	440	2…5	**LAZR90Q**
LC1 F185 or LC1 F225	LX4 FG110	110	2…5	**LAZR90F**
	LX4 FG125	127	2…5	**LAZR90F**
	LX4 FG220	220	2…5	**LAZR90M**
	LX4 FG250	240	2…5	**LAZR90M**
	LX4 FG375	380…415	2…5	**LAZR90Q**
	LX4 FG440	440	2…5	**LAZR90Q**
LC1 F265 or LC1 F330	LX4 FH110	110	2…5	**LAZR90F**
	LX4 FH125	127	2…5	**LAZR90F**
	LX4 FH220	220	2…5	**LAZR90M**
	LX4 FH250	240	2…5	**LAZR90M**
	LX4 FH375	380…415	2…5	**LAZR90Q**
	LX4 FH440	440	2…5	**LAZR90Q**
LC1 F400	LX4 FJ110	110	1…2	**LAZR90F**
	LX4 FJ125	127	1…2	**LAZR90F**
	LX4 FJ220	220	1…2	**LAZR90M**
	LX4 FJ250	240	1…2	**LAZR90M**
	LX4 FJ375	380	1…2	**LAZR90Q**
	LX4 FJ400	415	1…2	**LAZR90Q**
	LX4 FJ440	440	1…2	**LAZR90Q**
LC1 F500	LX4 FK110	110	1…2	**LAZR90F**
	LX4 FK125	127	1…2	**LAZR90F**
	LX4 FK220	220	1…2	**LAZR90M**
	LX4 FK250	240	1…2	**LAZR90M**
	LX4 FK375	380	1…2	**LAZR90Q**
	LX4 FK400	415	1…2	**LAZR90Q**
	LX4 FK440	440	1…2	**LAZR90Q**
LC1 F630	LX4 FL110	110	1…2	**LAZR90F**
	LX4 FL125	127	1…2	**LAZR90F**
	LX4 FL220	220	1…2	**LAZR90M**
	LX4 FL250	240	1…2	**LAZR90M**
	LX4 FL375	380	1…2	**LAZR90Q**
	LX4 FL400	415	1…2	**LAZR90Q**
	LX4 FL440	440	1…2	**LAZR90Q**

Add-on blocks for delayed opening devices				
Application	For use with delayed opening device	Operational voltage	Non-adjustable delay time	Reference
		V	s	
To double the delay time	LAZ R90F	110…127	Tr x 2	**LAZR91F**
	LAZ R90M	220…240	Tr x 2	**LAZR91M**
	LAZ R90Q	380…440	Tr x 2	**LAZR91Q**

Other versions

Delayed opening devices for use with other types of contactor. Please consult your Regional Sales Office.

Schemes:
page B9/61

TeSys contactors
TeSys F contactors
a.c. 50/60 Hz supply coils

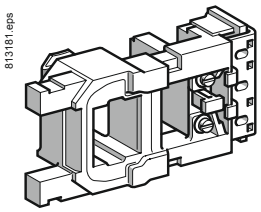

LX1 FF●●●

References

Maximum ambient air temperature: 55 °C. Above this, use an LX9 F coil, see page B9/22.

Control circuit voltage		Average resistance at 20 °C ±10 %	Inductance of closed circuit	Voltage code	Reference
Uc - 50 Hz	Uc - 60 Hz				
V	V	Ω	H		
For contactors LC1 F115 and LC1 F150					
24	–	0.27	0.04	B5	**LX1FF024**
42	–	0.94	0.13	D5	**LX1FF042**
–	48	0.78	0.11	E6	**LX1FF040**
48	–	1.17	0.16	E5	**LX1FF048**
–	110	4.55	0.59	F6	**LX1FF092**
–	120	4.77	0.64	G6	**LX1FF095**
110	–	6.38	0.86	F5	**LX1FF110**
115	–	6.38	0.86	FE5	**LX1FF110**
127/132	–	9.14	1.15	G5	**LX1FF127**
–	200/208	14.5	1.87	L6	**LX1FF162**
–	220	18.4	2.38	M6	**LX1FF184**
–	240	18.9	2.5	U6	**LX1FF187**
220	265/277	28.1	3.44	M5	**LX1FF220**
230	–	28.1	3.44	P5	**LX1FF220**
240	–	31.1	4.1	U5	**LX1FF240**
–	380	57.2	7.05	Q6	**LX1FF316**
–	440	72.6	9.21	R6	**LX1FF360**
380	460/480	86.9	10.3	Q5	**LX1FF380**
400	–	86.9	10.3	V5	**LX1FF380**
415	–	95.1	12	N5	**LX1FF415**
500	–	141	17	S5	**LX1FF500**
–	660	172	20.3	Y6	**LX1FF550**
660/690	–	254	28.9	Y5	**LX1FF660**
–	1000	414	48.9	–	**LX1FF850**
1000	–	610	68.5	–	**LX1FF1000**

Specifications

Average consumption at 20 °C:
- inrush 50 Hz: 550 VA; 60 Hz: 660 VA
- sealed 50 Hz: 45 VA; 60 Hz: 55 VA, cos φ= 0.3.

Heat dissipation: 12…16 W.
Operating time at Uc: closing = 23…35 ms, opening = 5…15 ms.
Operating cycles/hour (θ ≤ 55 °C): ≤ 2400.

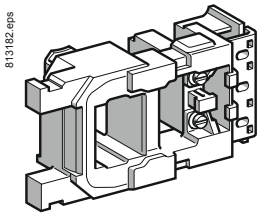

LX1 FG●●●

For contactors LC1 F185 and LC1 F225					
24	–	0.18	0.03	B5	**LX1FG024**
42	–	0.57	0.09	–	**LX1FG042**
–	48	0.47	0.08	E6	**LX1FG040**
48	–	0.71	0.12	E5	**LX1FG048**
–	110	2.74	0.44	F6	**LX1FG092**
–	115/120	2.87	0.49	G6	**LX1FG095**
110	–	4.18	0.65	F5	**LX1FG110**
115	–	4.18	0.65	FE5	**LX1FG110**
127/132	–	5.35	0.86	G5	**LX1FG127**
–	200/208	8.8	1.41	L6	**LX1FG162**
–	220	11.1	1.8	M6	**LX1FG184**
–	240	11.4	1.87	U6	**LX1FG187**
220	265/277	16.5	2.59	M5	**LX1FG220**
230	–	16.5	2.59	P5	**LX1FG220**
240	–	20.1	3.09	U5	**LX1FG240**
–	380	34	5.32	Q6	**LX1FG316**
–	440	43.5	6.94	R6	**LX1FG360**
380	460/480	51.3	7.75	Q5	**LX1FG380**
400	–	51.3	7.75	V5	**LX1FG380**
415	–	62.3	9.06	N5	**LX1FG415**
500	–	82.7	12.8	S5	**LX1FG500**
–	660	103	15.3	Y6	**LX1FG550**
660/690	–	154	21.8	Y5	**LX1FG660**
–	1000	249	36.6	–	**LX1FG850**
1000	–	370	51.6	–	**LX1FG1000**

Specifications

Average consumption at 20 °C:
- inrush 50 Hz: 805 VA; 60 Hz: 970 VA
- sealed 50 Hz: 55 VA; 60 Hz: 66 VA, cos φ= 0.3.

Heat dissipation: 18…24 W.
Operating time at Uc: closing = 20…35 ms, opening = 7…15 ms.
Operating cycles/hour (θ ≤ 55 °C): ≤ 2400.

TeSys contactors
TeSys F contactors
a.c. 40 to 400 Hz supply coils

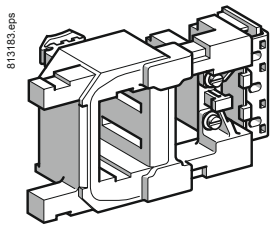

LX1 FH●●●2

References

Low sealed consumption.
Operate on networks with harmonic numbers ≤ 7.

Control circuit voltage Uc	Average resistance at 20 °C ±10 %		Inductance of closed circuit	Voltage code	Reference
	Inrush	Sealed			
V	Ω	Ω	H		
For contactors LC1 F265 and LC1 F330					
24	0.8	20	(1)	B7	**LX1FH0242**
48	2.96	67	(1)	E7	**LX1FH0482**
110	18.7	440	(1)	F7	**LX1FH1102**
115	18.7	440	(1)	FE7	**LX1FH1102**
120/127	22.9	536	(1)	G7	**LX1FH1272**
200/208	58.4	1366	(1)	L7	**LX1FH2002**
220	70.6	1578	(1)	M7	**LX1FH2202**
230	70.6	1578	(1)	P7	**LX1FH2202**
240	87.94	1968	(1)	U7	**LX1FH2402**
277	113	2444	(1)	W7	**LX1FH2772**
380	217	4631	(1)	Q7	**LX1FH3802**
400	217	4631	(1)	V7	**LX1FH3802**
415	217	4631	(1)	N7	**LX1FH3802**
440	265	6731	(1)	R7	**LX1FH4402**
480/500	329	8543	(1)	S7	**LX1FH5002**
600/660	296	10245	(1)	X7	**LX1FH6002**
1000	696	25880	(1)	–	**LX1FH10002**

Specifications
Average consumption at 20 °C for 50 or 60 Hz and cos φ = 0.9:
■ inrush: 600…700 VA
■ sealed: 8…10 VA.
Heat dissipation: 8 W.
Operating time at Uc: closing = 40…65 ms, opening = 100…170 ms.
Operating cycles/hour (θ ≤ 55 °C): ≤ 2400.

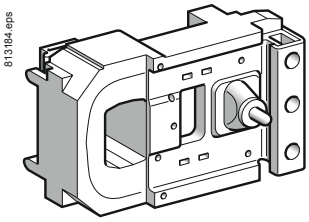

LX1 FJ●●●

For contactor LC1 F400					
48	1.6	29.5	0.18	E7	**LX1FJ048**
110/120	9.8	230	1.35	F7	**LX1FJ110**
115	9.8	230	1.35	FE7	**LX1FJ110**
120/127	12.8	280	1.75	G7	**LX1FJ127**
200/208	30	815	4.1	L7	**LX1FJ200**
220	37	1030	5.1	M7	**LX1FJ220**
230	37	1030	5.1	P7	**LX1FJ220**
240	47.5	1320	6.4	U7	**LX1FJ240**
265/277	61	1700	8.1	W7	**LX1FJ280**
380	120	3310	15.8	Q7	**LX1FJ380**
400	120	3310	15.8	V7	**LX1FJ380**
415	145	4070	19.4	N7	**LX1FJ415**
440	145	4070	19.4	R7	**LX1FJ415**
500	190	4980	25.5	S7	**LX1FJ500**
550/600	243	6310	27.4	X7	**LX1FJ600**
1000	720	19420	84.6	–	**LX1FJ1000**

Specifications
Average consumption at 20 °C for 50 or 60 Hz and cos φ = 0.9:
■ inrush: 1000…1150 VA
■ sealed: 12…18 VA.
Heat dissipation: 14 W.
Operating time at Uc: closing = 40…75 ms, opening = 100…170 ms.
Operating cycles/hour (θ ≤ 55 °C): ≤ 2400.

(1) Please consult your Regional Sales Office.

TeSys contactors

TeSys F contactors
a.c. 40 to 400 Hz supply coils

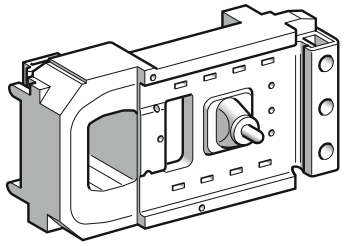

LX1 FK●●●

References

Low sealed consumption.
Operate on networks with harmonic numbers ⩽ 7.

Control circuit voltage Uc	Average resistance at 20 °C ±10 %		Inductance of closed circuit	Voltage code	Reference	Weight
	Inrush	Sealed				
V	Ω	Ω	H			kg
For contactor LC1 F500						
48	1.9	33.5	0.19	E7	**LX1FK048**	1.150
110/120	9.55	260	1.25	F7	**LX1FK110**	1.150
115	9.55	260	1.25	FE7	**LX1FK110**	1.150
120/127	11.5	315	1.5	G7	**LX1FK127**	1.150
200/208	29	735	3.75	L7	**LX1FK200**	1.150
220	35.5	915	4.55	M7	**LX1FK220**	1.150
230	35.5	915	4.55	P7	**LX1FK220**	1.150
240	44.5	1160	5.75	U7	**LX1FK240**	1.150
265/277	56.5	1490	7.3	W7	**LX1FK280**	1.150
380	112	2980	14.7	Q7	**LX1FK380**	1.150
400	112	2980	14.7	V7	**LX1FK380**	1.150
415	143	3730	18.4	N7	**LX1FK415**	1.150
440	143	3730	18.4	R7	**LX1FK415**	1.150
500	172	4590	22.8	S7	**LX1FK500**	1.150
550/600	232	5660	23.9	X7	**LX1FK600**	1.150
1000	679	16960	72	–	**LX1FK1000**	1.150

Specifications

Average consumption at 20 °C for 50 or 60 Hz, cos φ = 0.9:
- inrush: 1050…1150 VA,
- sealed: 16…20 VA.

Operating cycles/hour (θ ⩽ 55 °C): ⩽ 2400.
Heat dissipation: 18 W.
Operating time at Uc: closing = 40…75 ms, opening = 100…170 ms.

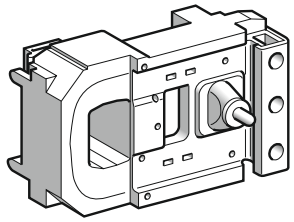

LX1 FL●●●

For contactor LC1 F630 and LC1 F1250						
48	1.1	17.1	0.09	E7	**LX1FL048** (1)	1.500
110/120	6.45	165	1.85	F7	**LX1FL110**	1.500
115	6.45	165	1.85	FE7	**LX1FL110**	1.500
127	8.1	205	1.05	G7	**LX1FL127**	1.500
200/208	20.5	605	2.65	L7	**LX1FL200**	1.500
220	25.5	730	3.35	M7	**LX1FL220**	1.500
230	25.5	730	3.35	P7	**LX1FL220**	1.500
240	25.5	730	3.35	U7	**LX1FL220**	1.500
265/277	31	900	4.1	W7	**LX1FL260**	1.500
380	78	2360	10.5	Q7	**LX1FL380**	1.500
400	78	2360	10.5	V7	**LX1FL380**	1.500
415	96	2960	13	N7	**LX1FL415**	1.500
440	96	2960	13	R7	**LX1FL415**	1.500
500	120	3660	16.5	S7	**LX1FL500**	1.500
550/600	155	4560	19.5	X7	**LX1FL600**	1.500
1000	474	12880	56.2	–	**LX1FL1000** (1)	1.500

(1) Incompatible with LC1F1250.

Specifications

Average consumption at 20 °C for 50 or 60 Hz, cos φ = 0.9:
- inrush: 1500…1730 VA,
- sealed: 20…25 VA.

Operating cycles/hour (θ ⩽ 55 °C): 1200.
Heat dissipation: 20 W.
Operating time at Uc: closing = 40…80 ms, opening = 100…200 ms.

TeSys contactors
TeSys F contactors
a.c. 40 to 400 Hz supply coils

Specifications
Average consumption at 20 °C for 50 or 60 Hz, cos φ = 0.9:
■ inrush: 1900…2300 VA, sealed: 44…55 VA.
Operating cycles/hour (θ ≤ 55 °C): 600.
Heat dissipation: 2 x 22 W.
Operating time at Uc: closing = 40…80 ms, opening = 130…230 ms.

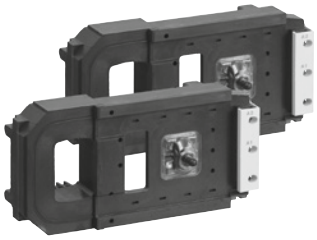

LX1 FX●●●

Specifications
Operating cycles/hour (θ ≤ 55 °C): 600.
Average consumption at 20 °C for 50 or 60 Hz, cos φ = 0.8:
■ inrush: 1700 VA, sealed: 12 VA.
Operating time at Uc: closing = 60…80 ms, opening = 160…180 ms.

Specifications
Average consumption at 20 °C for 50 or 60 Hz, cos φ = 0.9:
■ inrush: 1600…2400 VA, sealed: 29…37 VA.
Operating cycles/hour (θ ≤ 55 °C): 600.
Heat dissipation: 2 x 18 W.
Operating time at Uc: closing = 40…75 ms, opening = 100…170 ms.

813186.eps

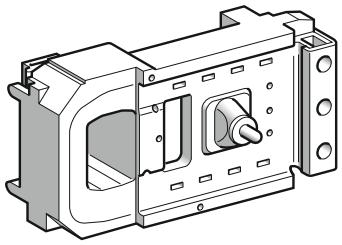

LX1 FK●●●

Specifications
Average consumption at 20 °C for 50 or 60 Hz, cos φ = 0.9:
■ inrush: 2200…2700 VA, sealed: 37.4…50.6 VA.
Operating cycles/hour (θ ≤ 55 °C): 600.
Heat dissipation: 2 x 25 W.
Operating time at Uc: closing = 40…80 ms, opening = 100…200 ms.

813187.eps

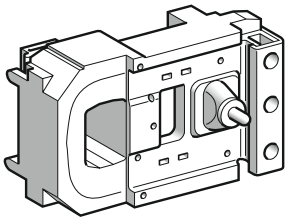

LX1 FL●●●

(1) Reference of set of 2 identical coils, to be connected in series.
(2) Value for the 2 coils in series.
(3) Rectifier to be ordered separately: 0.100 kg.
(4) Order 2 coils and connect them in series.

References

Low sealed consumption.
Operate on networks with harmonic numbers ≤ 7.

Control circuit voltage Uc	Average resistance at 20 °C ±10 % Inrush	Sealed	Inductance of closed circuit	Voltage code	Reference	Weight
V	Ω	Ω	H			kg
For contactor LC1 F780						
110/120	4.95 (2)	230 (2)	0.21	F7	**LX1FX110** (1)	3.000
115	4.95 (2)	230 (2)	0.21	FE7	**LX1FX110** (1)	3.000
127	6.1 (2)	280 (2)	0.26	G7	**LX1FX127** (1)	3.000
200/208	15.5 (2)	750 (2)	0.66	L7	**LX1FX200** (1)	3.000
220	19.5 (2)	920 (2)	0.82	M7	**LX1FX220** (1)	3.000
230	19.5 (2)	920 (2)	0.82	P7	**LX1FX220** (1)	3.000
240	19.5 (2)	920 (2)	0.82	U7	**LX1FX220** (1)	3.000
265/277	29.8 (2)	1330 (2)	1.25	W7	**LX1FX280** (1)	3.000
380	60.9 (2)	2780 (2)	2.3	Q7	**LX1FX380** (1)	3.000
400	60.9 (2)	2780 (2)	2.3	V7	**LX1FX380** (1)	3.000
415/480	74.3 (2)	3340 (2)	2.8	N7	**LX1FX415** (1)	3.000
440	74.3 (2)	3340 (2)	2.8	R7	**LX1FX415** (1)	3.000
500	92 (2)	4180 (2)	3.5	S7	**LX1FX500** (1)	3.000

Control circuit voltage Uc	Voltage code	Rectifier Reference (3)	Coil Reference	Weight
V				kg
For contactor LC1 F800				
110/127	FE7	**DR5TE4U**	**LX4F8FW**	1.650
220/240	P7	**DR5TE4U**	**LX4F8MW**	1.650
380/440	V7	**DR5TE4S**	**LX4F8QW**	1.650

Control circuit voltage Uc	Average resistance at 20 °C ±10 % Inrush	Sealed	Inductance of closed circuit	Voltage code	Reference	Weight
V	Ω	Ω	H			kg
For contactor LC1 F1000						
110	4.718	98.4	0.63	F7	**LX1FK055** (4)	1.150
120	5.92	106	0.72	G7	**LX1FK065** (4)	1.150
For contactors LC1 F1400, LC1 F1700 and LC1 F2100						
110	5.92	106	0.72	F7	**LX1FK065** (4)	1.150
120	5.92	106	0.72	G7	**LX1FK070** (4)	1.150
For contactors LC1 F1000, LC1 F1400, LC1 F1700 and LC1 F2100						
220	9.55	260	1.25	M7	**LX1FK110** (4)	1.150
230	9.55	260	1.25	P7	**LX1FK110** (4)	1.150
240	11.5	315	1.50	U7	**LX1FK127** (4)	1.150
277	16.5	420	2.25	W7	**LX1FK140** (4)	1.150
380	29	735	3.75	Q7	**LX1FK200** (4)	1.150
400	29	735	3.75	V7	**LX1FK200** (4)	1.150
415	35.5	915	4.55	N7	**LX1FK220** (4)	1.150
440	35.5	915	4.55	R7	**LX1FK220** (4)	1.150
500	44.5	1160	5.75	S7	**LX1FK240** (4)	1.150

Control circuit voltage Uc	Average resistance at 20 °C ±10 % Inrush	Sealed	Inductance of closed circuit	Voltage code	Reference	Weight
V	Ω	Ω	H			kg
For contactors LC1 F2600						
110	2.05	41	0.18	F7	**LX1FL065** (4)	1.150
120	2.05	41	0.18	G7	**LX1FL065** (4)	1.150
220	6.45	165	0.76	M7	**LX1FL110** (4)	1.150
230	6.45	165	0.76	P7	**LX1FL110** (4)	1.150
240	8.1	205	1.05	U7	**LX1FL127** (4)	1.150
277	10.2	317	1.45	W7	**LX1FL140** (4)	1.150
380	20.5	605	2.65	Q7	**LX1FL200** (4)	1.150
400	20.5	605	2.65	V7	**LX1FL200** (4)	1.150
415	25.5	730	3.35	N7	**LX1FL220** (4)	1.150
440	25.5	730	3.35	R7	**LX1FL220** (4)	1.150
500	30.8	901	4.13	S7	**LX1FL260** (4)	1.150

TeSys contactors

TeSys F contactors

a.c. 40 to 400 Hz supply coils for specific applications (1)

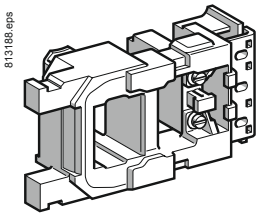

LX9 FF●●●

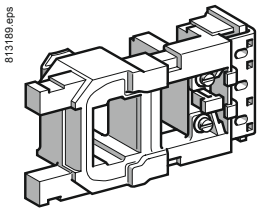

LX9 FG●●●

References

Low sealed consumption.
High tolerance to inrush voltage drops.
Immune to micro-breaks (mains supply or contact chain).
Operate on networks with harmonic numbers ⩽ 7.

Control circuit voltage Uc	Average resistance at 20 °C ±10 %		Inductance of closed circuit	Voltage code	Reference
	Inrush	Sealed			
V	Ω	Ω	H		
For contactors LC1 F115 and LC1 F150					
48	3.03	80.2	0.3	E7	**LX9FF048**
110	14.8	579	2.08	F7	**LX9FF110**
115	14.8	579	2.08	FE7	**LX9FF110**
120/127	19	746	2.65	G7	**LX9FF127**
208	45	1788	5.95	L7	**LX9FF200**
220	59.4	2190	7.7	M7	**LX9FF220**
230	59.4	2190	7.7	P7	**LX9FF220**
240	73.5	2750	9.68	U7	**LX9FF240**
380	173	6540	23	Q7	**LX9FF380**
400	173	6540	23	V7	**LX9FF380**
415	218	8460	30	N7	**LX9FF415**
440	218	8460	30	R7	**LX9FF415**
500	262	10300	36	S7	**LX9FF500**

Specifications
Average consumption at 20 °C: inrush: 690…855 VA, sealed: 6.6…8.1 VA.
Heat dissipation: 5.9…7.2 W.
Operating cycles/hour (θ ⩽ 55 °C): < 2400.
Operating time at Uc: closing = 35 ms, opening = 130 ms.

For contactors LC1 F185 and LC1 F225					
48	2.2	60	0.23	E7	**LX9FG048**
110	10.4	411	1.46	F7	**LX9FG110**
115	10.4	411	1.46	FE7	**LX9FG110**
120/127	13	520	1.85	G7	**LX9FG127**
208	33	1339	4.9	L7	**LX9FG200**
220	42.1	1680	5.84	M7	**LX9FG220**
230	42.1	1680	5.84	P7	**LX9FG220**
240	50.6	2060	7.22	U7	**LX9FG240**
380	128	4730	16.4	Q7	**LX9FG380**
400	128	4730	16.4	V7	**LX9FG380**
415	157	5930	20.6	N7	**LX9FG415**
440	157	5930	20.6	R7	**LX9FG415**
500	194	7550	26.3	S7	**LX9FG500**

Specifications
Average consumption at 20 °C: inrush: 950…1180 VA, sealed: 8.9…10.9 VA.
Heat dissipation: 8…9.8 W.
Operating cycles/hour (θ ⩽ 55 °C): < 2400.
Operating time at Uc: closing = 35 ms, opening = 130 ms.

For contactors LC1 F265 and LC1 F330					
48	2.96	72	(2)	–	**LX9FH0482**
110/115	18.7	415	(2)	–	**LX9FH1102**
120/127	22.9	156	(2)	–	**LX9FH1272**
220/230	71.6	1621	(2)	–	**LX9FH2202**
240	88	1968	(2)	–	**LX9FH2402**
380/415	222	5075	(2)	–	**LX9FH3802**
500	345	7990	(2)	–	**LX9FH5002**

Specifications
Average consumption at 20 °C: inrush: 560…660 VA, sealed: 8…10 VA.
Heat dissipation: 8.4…10.4 W.
Operating cycles/hour (θ ⩽ 55 °C): < 3600.
Operating time at Uc: closing = 45 ms, opening = 25 ms.

(1) Application examples: hoisting (inching, high operating rates), Main-Standby (unstable mains supplies). These coils are particularly suited for use at higher operating temperatures (mounting in non-ventilated compartments, enclosures, etc.).
(2) Please consult your Regional Sales Office.

Schemes:
page B9/60

TeSys contactors

TeSys F contactors

a.c. 40 to 400 Hz supply coils for specific applications

These coils are particularly suited for use at higher operating temperatures (mounting in non-ventilated compartments, enclosures, etc).
Application examples: hoisting (inching, high operating rates), Main-Standby (unstable mains supplies).

References

Coils with short operating times (at Uc):
- N/O: 60 ms
- N/C: 50 ms (∼ side); 20 ms (⎓ side).

Coils with high operating rates (θ ≤ 70 °C):
- 3600 operating cycles/hour
- 1800 for LC1 F630.

Coils with low inrush consumption.

Control circuit voltage Uc	Average resistance at 20 °C ±10 %		Inductance of closed circuit	Rectifier Reference (1)	Coil Reference	Weight
	Inrush	Sealed				
V	Ω	Ω	H			kg
For contactor LC1 F400						
48	4.03	43	0.22	**DR5TF4V**	**LX9FJ917**	0.970
110	25.7	246	1.3	**DR5TE4U**	**LX9FJ925**	0.970
127	32.3	302	1.7	**DR5TE4U**	**LX9FJ926**	0.970
220/230	99.5	919	5	**DR5TE4U**	**LX9FJ931**	0.970
380/415	311	3011	15	**DR5TE4S**	**LX9FJ936**	0.970
440	386	3690	19	**DR5TE4S**	**LX9FJ937**	0.970
500	478	4380	23	**DR5TE4S**	**LX9FJ938**	0.970

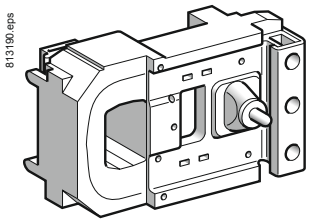

LX9 FJ●●●

Specifications
Average consumption:
- inrush: 500 VA
- sealed: 23 VA.

Heat dissipation: 11.4…13.9 W.

For contactor LC1 F500						
48	3.73	30.7	0.18	**DR5TF4V**	**LX9FK917**	1.080
110	24	204	1.1	**DR5TE4U**	**LX9FK925**	1.080
127	29.8	250	1.4	**DR5TE4U**	**LX9FK926**	1.080
220/230	89.9	770	4	**DR5TE4U**	**LX9FK931**	1.080
380/415	274	2075	12	**DR5TE4S**	**LX9FK936**	1.080
440	361	3060	16	**DR5TE4S**	**LX9FK937**	1.080
500	448	3750	19	**DR5TE4S**	**LX9FK938**	1.080

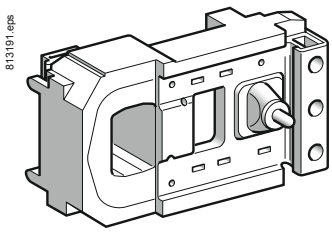

LX9 FK●●●

Specifications
Average consumption:
- inrush: 550 VA
- sealed: 31 VA.

Heat dissipation: 15…18.3 W.

For contactor LC1 F630						
48	2.81	20.8	0.17	**DR5TF4V**	**LX9FL917**	1.450
110	13.5	114	0.77	**DR5TE4U**	**LX9FL924**	1.450
127	20.8	167	1.2	**DR5TE4U**	**LX9FL926**	1.450
220	52	425	2.9	**DR5TE4U**	**LX9FL930**	1.450
220/240	64.5	518	3.6	**DR5TE4U**	**LX9FL931**	1.450
380/400	163	1360	8.8	**DR5TE4S**	**LX9FL935**	1.450
415/440	204	1670	11	**DR5TE4S**	**LX9FL936**	1.450
500	312	2510	17	**DR5TE4S**	**LX9FL938**	1.450

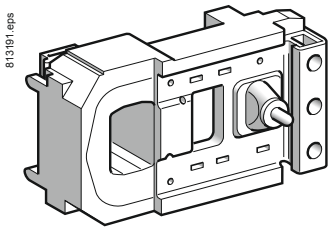

LX9 FL●●●

Specifications
Average consumption:
- inrush: 830 VA
- sealed: 47 VA.

Heat dissipation: 22.8…27.8 W.

Schemes:
page B9/60

TeSys contactors
TeSys F contactors
d.c. supply coils

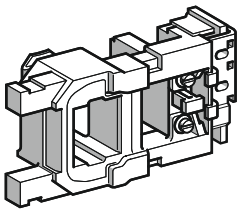

LX4 FF●●●

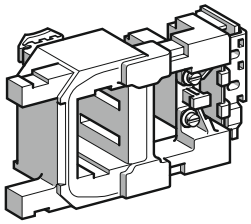

LX4 FH●●●

References

Low sealed consumption.

Control circuit voltage Uc	Average resistance at 20 °C ±10 % Inrush	Sealed	Inductance of closed circuit	Voltage code	Reference
V	Ω	Ω	H		
For contactors LC1 F115 and LC1 F150					
24	1.12	177	11	**BD**	**LX4FF024**
48	4.52	715	42.7	**ED**	**LX4FF048**
110	21.7	2940	179	**FD**	**LX4FF110**
125	26.8	3560	223	**GD**	**LX4FF125**
220/230	84	11100	704	**MD**	**LX4FF220**
250	105	13000	868	**UD**	**LX4FF250**
440/460	301	48200	4000	**RD**	**LX4FF440**

Specifications
Average consumption:
- inrush: 543…665 W,
- sealed: 3.94…4.83 W.

Operating time at Uc: closing = 30…40 ms, opening = 30…50 ms.
Operating cycles/hour (θ ≤ 55 °C): ≤ 2400.

For contactors LC1 F185 and LC1 F225					
24	0.79	169	14.9	**BD**	**LX4FG024**
48	3.2	662	55.3	**ED**	**LX4FG048**
110	14.9	2810	241	**FD**	**LX4FG110**
125	19	3320	289	**GD**	**LX4FG125**
220/230	57.7	10200	890	**MD**	**LX4FG220**
250	76	12400	1140	**UD**	**LX4FG250**
440/460	223	39700	4210	**RD**	**LX4FG440**

Specifications
Average consumption:
- inrush: 737…902 W,
- sealed: 4.13…5.07 W.

Operating time at Uc: closing = 30…40 ms, opening = 30…50 ms.
Operating cycles/hour (θ ≤ 55 °C): ≤ 2400.

For contactors LC1 F265 and LC1 F330					
24	0.9	192	26.3	**BD**	**LX4FH024**
48	3.49	707	92.9	**ED**	**LX4FH048**
110	16.8	3180	424	**FD**	**LX4FH110**
125	20.8	3840	530	**GD**	**LX4FH125**
220/230	65.7	11500	1590	**MD**	**LX4FH220**
250	84	13900	1910	**UD**	**LX4FH250**
440/460	255	44000	7570	**RD**	**LX4FH440**

Specifications
Average consumption:
- inrush: 655…803 W,
- sealed: 3.68…4.53 W.

Operating time at Uc: closing = 40…50 ms, opening = 40…65 ms.
Operating cycles/hour (θ ≤ 55 °C): ≤ 2400.

For contactor LC1 F400					
48	2.5	558	56	**ED**	**LX4FJ048**
110	12.7	2660	270	**FD**	**LX4FJ110**
125	15.8	3130	330	**GD**	**LX4FJ125**
220	47	8820	910	**MD**	**LX4FJ220**
250	61	10500	1200	**UD**	**LX4FJ250**
440	236	33750	4435	**RD**	**LX4FJ440**

Specifications
Average consumption:
- inrush: 920…1140 W,
- sealed: 4…7.5 W.

Operating time at Uc: closing = 50…60 ms, opening = 45…60 ms.
Operating cycles/hour (θ ≤ 55 °C): ≤ 2400.

Schemes:
page B9/60

TeSys contactors
TeSys F contactors
d.c. supply coils

TeSys F

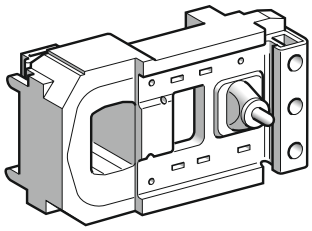

LX4 FK●●●

Specifications
Average consumption:
- inrush: 990…1220 W,
- sealed: 4.54…8 W.

Operating cycles/hour (θ ≤ 55 °C): 2400.
Operating time at Uc: closing = 50…60 ms, opening = 45…60 ms.

Specifications
Average consumption:
- inrush: 1420…1920 W,
- sealed: 6.5…12.5 W.

Operating cycles/hour (θ ≤ 55 °C): 1200.
Operating time at Uc: closing = 60…70 ms, opening = 40…50 ms.

Specifications
Average consumption:
- inrush: 1960…2420 W
- sealed: 42…52 W.

Operating cycles/hour (θ ≤ 55 °C): 600.
Operating time at Uc: closing = 70…80 ms, opening = 100…130 ms.

Specifications
Heat dissipation: 25 W.
Operating time at Uc: closing = 60…80 ms, opening = 40…50 ms.

Specifications
Average consumption:
- inrush: 2000…2200 W,
- sealed: 8…10 W.

Operating cycles/hour (θ ≤ 55 °C): 600.
Operating time at Uc: closing = 50…60 ms, opening = 45…60 ms.

Specifications
Average consumption:
- inrush: 2130…2880 W
- sealed: 13…25 W

Operating cycles/hour (θ ≤ 55 °C): 600.
Operating time at Uc: closing = 60…70 ms, opening = 40…50 ms.

References

Low sealed consumption.

Control circuit voltage Uc	Average resistance at 20 °C ±10 % Inrush	Sealed	Inductance of closed circuit	Voltage code	Reference	Weight
V	Ω	Ω	H			kg
For contactor LC1 F500						
48	2.35	515	67	ED	**LX4FK048**	1.080
110	11.5	2450	280	FD	**LX4FK110**	1.080
125	15	2930	400	GD	**LX4FK125**	1.080
220	44	8150	1080	MD	**LX4FK220**	1.080
250	56	9650	1350	UD	**LX4FK250**	1.080
440	225	31300	5270	RD	**LX4FK440**	1.080
For contactor LC1 F630 and LC1 F1250						
48	1.7	353	40.5	ED	**LX4FL048**	1.450
110	8.1	1680	180	FD	**LX4FL110**	1.450
125	10	2110	230	GD	**LX4FL125** (1)	1.450
220	31	5160	650	MD	**LX4FL220**	1.450
250	38	6080	815	UD	**LX4FL250**	1.450
440	152	23120	2910	RD	**LX4FL440** (1)	1.450
For contactor LC1 F780						
110	6.1 (3)	280 (3)	0.26	FD	**LX4FX110** (2)	3.000
125	7.7 (3)	410 (3)	0.33	GD	**LX4FX125** (2)	3.000
220	24.6 (3)	1100 (3)	1	MD	**LX4FX220** (2)	3.000
250	29.8 (3)	1330 (3)	1.25	UD	**LX4FX250** (2)	3.000
440	92 (3)	4180 (3)	3.5	RD	**LX4FX440** (2)	3.000
For contactor LC1 F800						
110/120	–	–	–	FW	**LX4F8FW**	1.650
220/240	–	–	–	MW	**LX4F8MW**	1.650
380/400	–	–	–	QW	**LX4F8QW**	1.650
For contactors LC1 F1000, LC1 F1400, LC1 F1700 and LC1 F2100						
110	2.94	734	98	FD	**LX4FK055** (4)	1.080
125	3.73	916	122	GD	**LX4FK065** (4)	1.080
220	11.5	2450	280	MD	**LX4FK110** (4)	1.080
250	15	2930	400	UD	**LX4FK125** (4)	1.080
440	44	8150	1080	RD	**LX4FK220** (4)	1.080
For contactors LC1 F2600						
110	2.05	481	64	FD	**LX4FL055** (4)	1.080
125	2.53	603	80	GD	**LX4FL065** (4)	1.080
220	11.5	2450	280	MD	**LX4FL110** (4)	1.080
250	15	2930	400	UD	**LX4FL125** (4)	1.080
440	44	8150	1080	RD	**LX4FL220** (4)	1.080

(1) Incompatible with LC1 F1250.
(2) Reference of set of 2 identical coils, to be connected in series.
(3) Value for the 2 coils in series.
(4) Order 2 coils and connect them in series.

Schemes:
page B9/61

TeSys contactors
TeSys F contactors
d.c. supply coils for specific applications

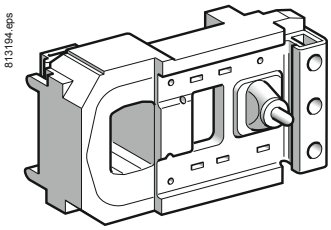

LX9 FJ●●●

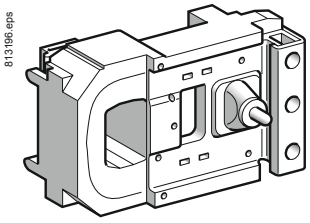

LX9 FK●●●

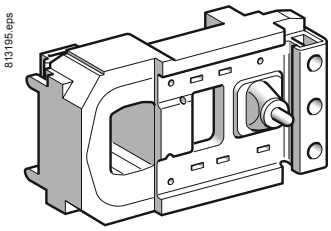

LX9 FL●●●

References

Coils with short operating times (at Uc):
- N/O: 60 ms
- N/C: 20 ms.

Coils with high operating rates (θ ≤ 70 °C):
- 3600 operating cycles/hour
- 1800 for LC1 F630.

Coils with low inrush consumption.

Control circuit voltage Uc	Average resistance at 20 °C ±10 %		Induc-tance of closed circuit	Resistor (1)		Coil	
	Inrush	Sealed		Qty required	Reference	Reference	Weight
V	Ω	Ω	H				kg
For contactor LC1 F400							
48	5.11	99	0.27	1	**DR2SC0047**	**LX9FJ918**	0.970
110	32.3	632	1.7	1	**DR2SC0330**	**LX9FJ926**	0.970
125	39.4	760	2	1	**DR2SC0390**	**LX9FJ927**	0.970
220	123	2320	6.1	1	**DR2SC1200**	**LX9FJ932**	0.970
440/460	478	9080	23	1	**DR2SC4700**	**LX9FJ938**	0.970

Specifications

Average consumption:
- inrush: 430 W
- sealed: 22 W.

For contactor LC1 F500							
48	4.67	76.7	0.22	1	**DR2SC0039**	**LX9FK918**	1.080
110	29.8	470	1.4	1	**DR2SC0220**	**LX9FK926**	1.080
125	37.4	637	1.7	1	**DR2SC0330**	**LX9FK927**	1.080
220	115	1935	5.1	1	**DR2SC1000**	**LX9FK932**	1.080
440/460	448	7050	19	1	**DR2SC3300**	**LX9FK938**	1.080

Specifications

Average consumption:
- inrush: 470 W
- sealed: 29 W.

For contactor LC1 F630							
48	3.43	52.9	0.20	2	**DR2SC0047**	**LX9FL918**	1.450
110	17.2	272	0.98	2	**DR2SC0270**	**LX9FL925**	1.450
125	20.8	333	1.2	2	**DR2SC0330**	**LX9FL926**	1.450
220	64.5	1018	3.6	2	**DR2SC1000**	**LX9FL931**	1.450
440/460	260	4010	14	2	**DR2SC3900**	**LX9FL937**	1.450

Specifications

Average consumption:
- inrush: 733 W
- sealed: 48 W.

(1) Resistor to be ordered separately, weight of resistor: 0.030 kg.

High power contactors

Schemes:
page B9/60

TeSys contactors

TeSys F contactors

Wide range d.c. supply coils for specific applications

813198.eps

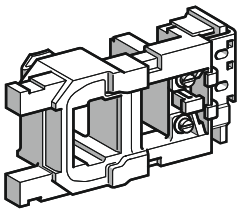

LX4 FF●●●

813197.eps

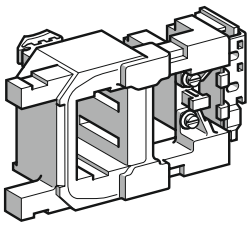

LX4 FH●●●

References

Wide range coils: 0.7…1.25 Uc.
Operating cycles/hour: ⩽ 60 (1).
Ambient temperature (operation): -55 to + 70 °C.

Control circuit voltage Uc	Average resistance at 20 °C ±10 %		Inductance of closed circuit	Reference
	Inrush	Sealed		
V	Ω	Ω	H	
For contactors LC1 F115 and LC1 F150				
24	0.71	120	7.4	**LX4FF020**
48	2.86	392	27	**LX4FF040**
72	7.05	1055	66	**LX4FF060**
110	13.2	1970	121	**LX4FF090**
125	16.9	2340	149	**LX4FF100**

Specifications
Average consumption:
- inrush: 415…1300 W
- sealed: 3…9 W.

For contactors LC1 F185 and LC1 F225				
24	0.52	112	9.3	**LX4FG020**
48	2	359	34.4	**LX4FG040**
72	5.07	984	85	**LX4FG060**
110	9.66	1840	157	**LX4FG090**
125	12	2230	196	**LX4FG100**

Specifications
Average consumption:
- inrush: 580…1820 W
- sealed: 3.1…9.5 W.

For contactors LC1 F265 and LC1 F330				
24	0.58	129	17.3	**LX4FH020**
48	2.19	400	59.5	**LX4FH040**
72	5.58	1110	149	**LX4FH060**
110	11	2120	287	**LX4FH090**
125	13.8	2520	353	**LX4FH100**

Specifications
Average consumption:
- inrush: 515…1600 W
- sealed: 2.7…8.5 W.

Operational voltage	Average resistance at 20 °C ±10 %	Inductance of closed circuit	Coil	Economy resistor Resistors in //			Reference of the assembly (2)
			Reference	No.	Ω	Reference	
V	Ω	H					
For contactor LC1 F400							
24	1.05	0.049	**LX2 FJW11**	3	56	**DR2 SC0056**	**LX5FJW11**
48	4.8	0.22	**LX2 FJW18**	3	220	**DR2 SC0220**	**LX5FJW18**
72	9.6	0.44	**LX2 FJW21**	3	470	**DR2 SC0470**	**LX5FJW21**

Specifications
Average consumption:
- inrush: 290…860 W
- sealed: 16…47 W.

(1) The mechanical durability of the contactor is limited to 1 million operating cycles.
*(2) The set comprises: 1 coil **LX2 FJ** and 3 resistors **DR2 SC**.*

Schemes:
page B9/60

TeSys contactors
Auxiliary contact blocks for 3-pole shockproof contactors LC1 FG

TeSys FG

DF537317.eps

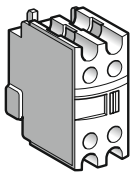

LAD N●●

Instantaneous auxiliary contact blocks

For use in normal operating environments

Number of contacts	Max. number of blocks per contactor Clip-on mounting	Composition	Reference	
1	1	– – 1 –	**LADN10**	(1)
		– – – 1	**LADN01**	(1)
4	1	– – 2 2	**LADN22**	(1)
		– – 4 –	**LADN40**	(1)
		– – – 4	**LADN04**	(1)
		– – 3 1	**LADN31**	(1)

DF537318.eps

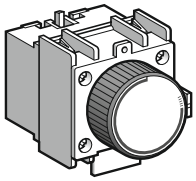

LAD T●

Time delay auxiliary contact blocks

Number of contacts	Max. number of blocks per contactor Clip-on mounting	Time delay Type	Range s	Reference	
1 N/O + 1 N/C	1	On-delay	0.1…3 (2)	**LADT0**	
			0.1…30	**LADT2**	(1)
			10…180	**LADT4**	
			1…30 (3)	**LADS2**	
		Off-delay	0.1…3 (2)	**LADR0**	
			0.1…30	**LADR2**	(1)
			10…180	**LADR4**	

DF537319.eps

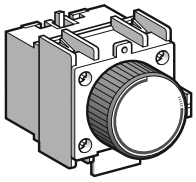

LAD R●

(1) Device approved by the DCN (French naval shipyard department) and authorised for on-board use.
(2) With extended scale from 0.1 to 0.6 s.
(3) With switching time of 40 ms ±15 ms between opening of the N/C contact and closing of the N/O contact.

High power contactors

Characteristics: pages B9/82 and B9/83
Schemes: page B9/85

TeSys contactors
Coils for 3-pole shockproof contactors LC1 FG
Spare or replacement parts a.c. supply 50/60 Hz

DF537299.eps

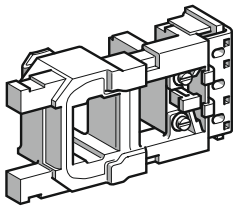

LX1 FF●●●

DF537300.eps

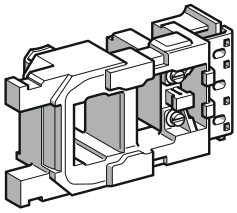

LX1 FG●●●

References

Control circuit voltage Uc		Voltage code	Coil reference	
50 Hz	60 Hz			
V	V			
Coils for contactors LC1 FG150				
–	48	E6	**LX1FF040**	
48	–	E5	**LX1FF048**	
–	110	F6	**LX1FF092**	
–	115/120	G6	**LX1FF095**	(1)
110/115	–	F5	**LX1FF110**	
120	–	FE5	**LX1FF120**	
–	208	L6	**LX1FF170**	
–	320	M6	**LX1FF184**	
–	230/240	U6	**LX1FF187**	
208	–	LE5	**LX1FF200**	
220/230	–	M5	**LX1FF220**	
240	–	U5	**LX1FF240**	
–	380	Q6	**LX1FF316**	
–	415	N6	**LX1FF340**	
–	440	R6	**LX1FF360**	
380	–	Q5	**LX1FF380**	
415/440	–	N5	**LX1FF415**	

Specifications
Average consumption at 20 °C:
- inrush 50 Hz: 550 VA; 60 Hz: 660 VA
- sealed 50 Hz: 45 VA; 60 Hz: 55 VA, cos φ = 0.32.

Operating cycles/hour (θ = 55 °C): 2400.

Coils for contactors LC1 FG185				
–	48	E6	**LX1FG040**	
48	–	E5	**LX1FG048**	
–	110	F6	**LX1FG092**	
–	115/120	G6	**LX1FG095**	(1)
110/115	–	F5	**LX1FG110**	
120	–	FE5	**LX1FG120**	
–	208	L6	**LX1FG170**	
–	320	M6	**LX1FG184**	
–	230/240	U6	**LX1FG187**	
208	–	LE5	**LX1FG200**	
220/230	–	M5	**LX1FG220**	
240	–	U5	**LX1FG240**	
–	380	Q6	**LX1FG316**	
–	415	N6	**LX1FG340**	
–	440	R6	**LX1FG360**	
380	–	Q5	**LX1FG380**	
415/440	–	N5	**LX1FG415**	

Specifications
Average consumption at 20 °C:
- inrush 50 Hz: 805 VA; 60 Hz: 970 VA
- sealed 50 Hz: 55 VA; 60 Hz: 66 VA, cos φ = 0.34.

Operating cycles/hour (θ = 55 °C): 2400.

(1) Device approved by the DCN (French naval shipyard department) and authorised for on-board use.

Schemes:
page B9/85

TeSys contactors
Coils for 3-pole shockproof contactors LC1 FG
Spare or replacement parts a.c. supply 50/60 Hz

DF537301.eps

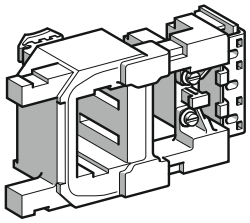

LX1 FH●●●

DF537302.eps

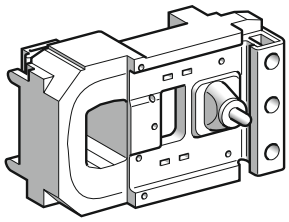

LX1 FJ●●●

DF537303.eps

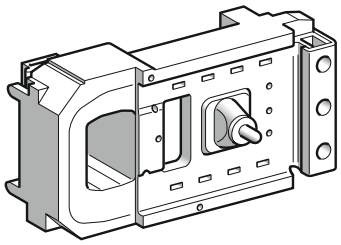

LX1 FK●●●

DF537304.eps

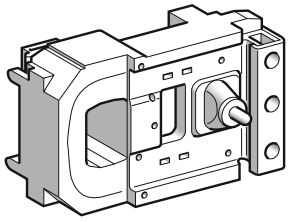

LX1 FL●●●

References

Control circuit voltage Uc 50 and 60 Hz	Voltage code	Coil reference		Weight
V				kg
Coils for contactors LC1 FG265				
110/120	F7	**LX1FH1102**	(1)	0.740
208	L7	**LX1FH2002**		0.740
220/230	M7	**LX1FH2202**		0.740
240	U7	**LX1FH2402**		0.740
380/415	Q7	**LX1FH3802**		0.740

Specifications
Average consumption at 20 °C:
- inrush 50 or 60 Hz: 600 to 700 VA
- sealed 50 or 60 Hz: 8 to 10 VA, cos φ = 0.9.

Operating cycles/hour (θ = 55 °C): 2400.

Coils for contactors LC1 FG400				
110/120	F7	**LX1FJ110**	(1)	1.000
208	L7	**LX1FJ200**		1.000
220/230	M7	**LX1FJ220**		1.000
230/240	U7	**LX1FJ240**		1.000
380/400	Q7	**LX1FJ380**		1.000
415/440	N7	**LX1FJ415**		1.000

Specifications
Average consumption at 20 °C:
- inrush 50 or 60 Hz: 1000 to 1150 VA
- sealed 50 or 60 Hz: 12 to 18 VA, cos φ = 0.9.

Operating cycles/hour (θ = 55 °C): 2400.

Coils for contactors LC1 FG500				
110/120	F7	**LX1FK110**	(1)	1.150
208	L7	**LX1FK200**		1.150
220/230	M7	**LX1FK220**		1.150
230/240	U7	**LX1FK240**		1.150
380/400	Q7	**LX1FK380**		1.150
415/440	N7	**LX1FK415**		1.150

Specifications
Average consumption at 20 °C:
- inrush 50 or 60 Hz: 1050 to 1150 VA
- sealed 50 or 60 Hz: 16 to 20 VA, cos φ = 0.9.

Operating cycles/hour (θ = 55 °C): 2400.

Coils for contactors LC1 FG630				
110/120	F7	**LX1FL110**	(1)	1.500
208	L7	**LX1FL200**		1.500
220/230	M7	**LX1FL220**		1.500
380/400	Q7	**LX1FL380**		1.500
415/440	N7	**LX1FL415**		1.500

Specifications
Average consumption at 20 °C:
- inrush 50 or 60 Hz: 1500 to 1730 VA
- sealed 50 or 60 Hz: 20 to 25 VA, cos φ = 0.9.

Operating cycles/hour (θ = 55 °C): 1200.

(1) Device approved by the DCN (French naval shipyard department) and authorised for on-board use.

Schemes:
page B9/85

TeSys contactors
Magnetic latching contactors
Accessories

TeSys CR1 F, TeSys CR1B

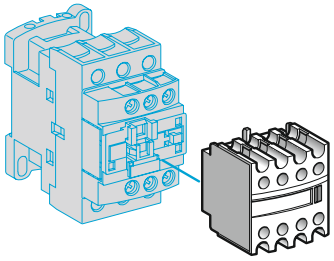

LAD N

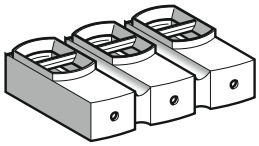

LA9 F103

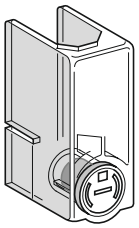

LA9 F70●

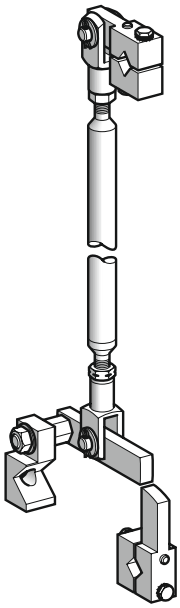

EZ2 LB0601

Accessories for contactors CR1 F

Description	Number of contacts or shrouds	For use on	Reference
Instantaneous auxiliary contacts	(1)	CR1 F	**LADN●●, LADN●●●, LADX●●, LADY●●, LADZ●●** (1)
Time delay auxiliary contacts	(1)	CR1 F	**LADT●, LADS●, LADR●** (1)
Contact blocks with protected terminals for 3-pole contactors (for mounting on contactors with closed arc chamber)	Set of 2 blocks	CR1 F150 and CR1 F185	**LA9F103**
Power terminal protection shrouds	Set of 6 shrouds for 3-pole contactors	CR1 F150 and CR1 F185	**LA9F702**
		CR1 F265 to CR1 F500	**LA9F703**
		CR1 F630	**LA9F704**
	Set of 8 shrouds for 4-pole contactors	CR1 F1504 and CR1 F1854	**LA9F707**
		CR1 F2654 to CR1 F5004	**LA9F708**
		CR1 F6304	**LA9F709**

Description	Application	Reference
Mechanical interlock and power connections	For assembly of reversing contactors and changeover contactor pairs	See pages B9/31 and B9/32

Accessories for contactors CR1 B

Description	Application	Reference	Weight kg
Mechanical interlock with mounting accessories (2)	For vertical assembly of reversing contactors and changeover contactor pairs	**EZ2LB0601**	1.560
Kit containing 2 bar mounting brackets	For mounting on 120 or 150 mm centres	**LA9B103**	1.620

(1) For maximum number per contactor and complete reference, see page B9/11.
(2) Positive mechanical interlocking between 2 vertically mounted contactors of identical or different ratings. Connecting rods and cranks assembled on right-hand sides, crank pins on the pole side.
Vertical fixing centre distance between the two contactors: 600 mm.

Selection: pages B9/86 to B9/91
Characteristics: pages B9/30 to B9/35
Dimensions: pages B9/96 to B9/99

TeSys contactors
Magnetic latching contactors
Components for assembling reversing contactors and changeover contactor pairs CR1 F
Horizontally or vertically mounted

Horizontally mounted

Mechanical interlocks

Reversers assembled using 2 contactors of identical rating, type:
CR1 F150
CR1 F185
CR1 F265
CR1 F400
CR1 F500
CR1 F630

LA9 F●970 (1)

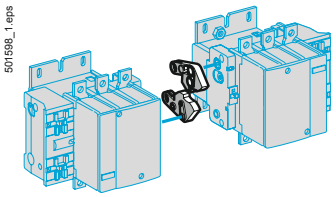

Sets of power connections

Reversing contactors
LA9 F●976 (1)

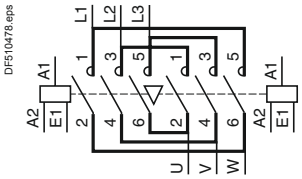

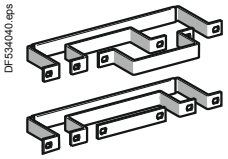

3 or 4-pole changeover contactor pairs
LA9 F●977 (1) or LA9 F●982 (1)

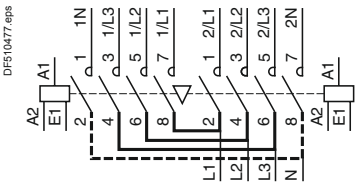

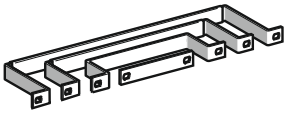

Vertically mounted

Mechanical interlocks

Reversers assembled using 2 contactors of identical rating, type:
CR1 F150
CR1 F185
CR1 F265
CR1 F400
CR1 F500
CR1 F630

LA9 FF4F Assembly A
LA9 FG4G

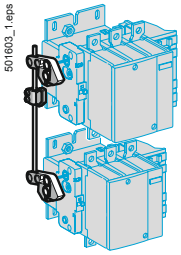

LA9 FH4H Assembly C
LA9 FJ4J
LA9 FK4K
LA9 FL4L

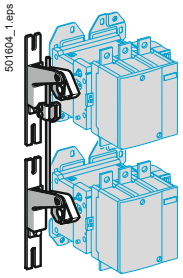

Reversers assembled using 2 contactors of different ratings, type:
CR1 F150
CR1 F185
CR1 F265
CR1 F400
CR1 F500
CR1 F630

LA9 FG4F Assembly A

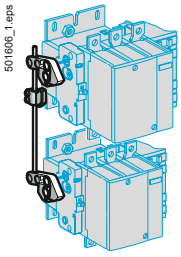

LA9 FH4F Assembly B
LA9 FJ4F
LA9 FK4F
LA9 FL4F
LA9 FH4G
LA9 FJ4G
LA9 FK4G
LA9 FL4G

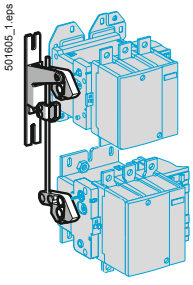

LA9 FJ4H Assembly C
LA9 FK4H
LA9 FL4H
LA9 FK4J
LA9 FL4J
LA9 FK4K

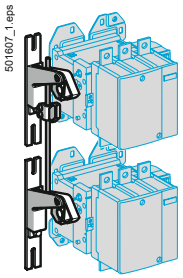

Reversers assembled using 3 contactors of identical or different ratings

LA9 F●4●4● (2)

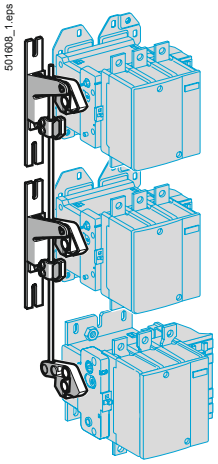

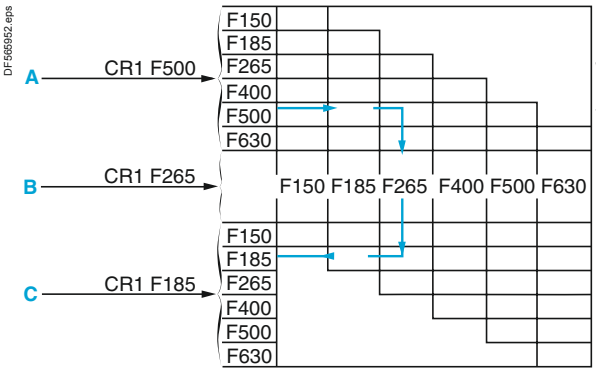

Warning: the contactor ratings must be in decreasing size from top to bottom.

(1) Complete references: see page B9/37.
(2) Complete references: see pages B9/40 and B9/41.

TeSys contactors
Magnetic latching contactors
Components for assembling reversing contactors and changeover contactor pairs
CR1 F

Reversers assembled using 2 contactors of identical rating

For assembly of 3-pole reversing contactors for motor control [1]

Contactor type	Set of power connections			Mechanical interlock	
	3-pole Reference	4-pole Reference	Weight kg	Kit reference	Weight kg
Horizontally mounted					
CR1 F150	**LA9FF976**	–	0.600	**LA9FF970**	0.060
CR1 F185	**LA9FG976**	–	0.780	**LA9FG970**	0.060
CR1 F265	**LA9FH976**	–	1.500	**LA9FJ970**	0.140
CR1 F400	**LA9FJ976**	–	2.100	**LA9FJ970**	0.140
CR1 F500	**LA9FK976**	–	2.350	**LA9FJ970**	0.140
CR1 F630	**LA9FL976**	–	3.800	**LA9FL970**	0.150
Vertically mounted					
CR1 F150	[2]	–	–	**LA9FF4F**	0.345
CR1 F185	[2]	–	–	**LA9FG4G**	0.350
CR1 F265	[2]	–	–	**LA9FH4H**	1.060
CR1 F400	[2]	–	–	**LA9FJ4J**	1.200
CR1 F500	[2]	–	–	**LA9FK4K**	1.200
CR1 F630	[2]	–	–	**LA9FL4L**	1.220

For assembly of 4-pole changeover contactor pairs

Horizontally mounted					
CR1 F1504	**LA9FF982**	**LA9FF977**	0.460	**LA9FF970**	0.060
CR1 F1854	**LA9FG982**	**LA9FG977**	0.610	**LA9FG970**	0.060
CR1 F2654	**LA9FH982**	**LA9FH977**	1.200	**LA9FJ970**	0.140
CR1 F4004	**LA9FJ982**	**LA9FJ977**	1.800	**LA9FJ970**	0.140
CR1 F5004	**LA9FK982**	**LA9FK977**	2.300	**LA9FJ970**	0.140
CR1 F6304	**LA9FL982**	**LA9FL977**	3.400	**LA9FL970**	0.150
Vertically mounted					
CR1 F1504	[2]	–	–	**LA9FF4F**	0.345
CR1 F1854	[2]	–	–	**LA9FG4G**	0.350
CR1 F2654	[2]	–	–	**LA9FH4H**	1.060
CR1 F4004	[2]	–	–	**LA9FJ4J**	1.200
CR1 F5004	[2]	–	–	**LA9FK4K**	1.200
CR1 F6304	[2]	–	–	**LA9FL4L**	1.220

Reversers assembled using 2 contactors of different ratings

For assembly of 3 or 4-pole changeover contactor pairs

Contactor type		Mechanical interlock	
At bottom	At top	Kit reference	Weight kg
Vertically mounted [3]			
CR1 F150 or F1504	CR1 F185 or F1854	**LA9FG4F**	0.350
	CR1 F265 or F2654	**LA9FH4F**	0.870
	CR1 F400 or F4004	**LA9FJ4F**	0.930
	CR1 F500 or F5004	**LA9FK4F**	0.940
	CR1 F630 or F6304	**LA9FL4F**	0.940
CR1 F185 or F1854	CR1 F265 or F2654	**LA9FH4G**	0.860
	CR1 F400 or F4004	**LA9FJ4G**	0.940
	CR1 F500 or F5004	**LA9FK4G**	0.940
	CR1 F630 or F6304	**LA9FL4G**	0.950
CR1 F265 or F2654	CR1 F400 or F4004	**LA9FJ4H**	1.130
	CR1 F500 or F5004	**LA9FK4H**	1.130
	CR1 F630 or F6304	**LA9FL4H**	1.140
CR1 F400 or F4004	CR1 F500 or F5004	**LA9FK4J**	1.200
	CR1 F630 or F6304	**LA9FL4J**	1.210
CR1 F500 or F5004	CR1 F630 or F6304	**LA9FL4K**	1.210

For assembly of 3 or 4-pole reversing contactors

Using 3 contactors (vertically mounted) of identical or different ratings	Mechanical interlock Kit reference [4]
The contactor ratings must be in decreasing size from top to bottom.	**LA9F●4●4●**

(1) A 3-pole reversing contactor for motor control can be converted into a 3-pole changeover contactor pair by removing the upper connecting links.
(2) All power connections are to be made by the customer.
(3) With identical or different number of poles. Power connections to be made by the customer.
(4) Complete the reference by replacing the first dot with the code for the upper contactor, the second dot with the code for the middle contactor and the third dot with the code for the bottom contactor.

Contactors	CR1 F150	CR1 F185	CR1 F265	CR1 F400	CR1 F500	CR1 F630
Code	F	G	H	J	K	L

Example: mechanical interlock for reversing contactor made up of 3 different contactors: CR1 F500 top, CR1 F265 middle and CR1 F185 bottom: **LA9 FK4H4G**.

Illustrations: page B9/31

Dimensions: pages B9/96 to B9/99

TeSys contactors

Magnetic latching contactors

Accessories and replacement parts for contactors CR1 F

501478_1.eps

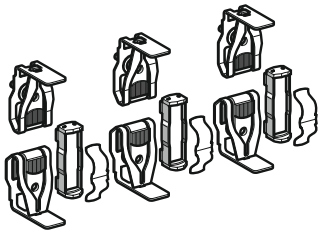

LA5 FG431

501479_1.eps

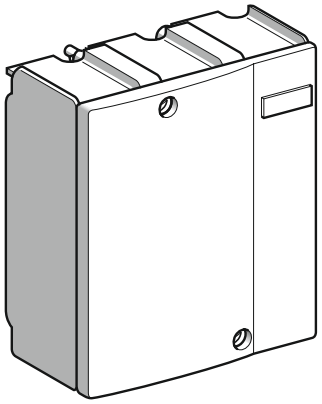

LA5 F40050

References

Description	For contactor		Reference	Weight kg
Complete sets of contacts for 3 or 4 poles (1)	3-pole	CR1 F150	**LA5FF431**	0.270
		CR1 F185	**LA5FG431**	0.350
		CR1 F265	**LA5FH431**	0.660
		CR1 F400	**LA5F400803**	0.660
		CR1 F500	**LA5F500803**	0.660
		CR1 F630	**LA5F630803**	0.660
	4-pole	CR1 F1504	**LA5FF441**	0.360
		CR1 F1854	**LA5FG441**	0.465
		CR1 F2654	**LA5FH441**	0.880
		CR1 F4004	**LA5F400804**	0.465
		CR1 F5004	**LA5F500804**	0.465
		CR1 F6304	**LA5F630804**	0.465
Arc chambers	3-pole	CR1 F150	**LA5F15050**	0.490
		CR1 F185	**LA5F18550**	0.670
		CR1 F265	**LA5F26550**	0.920
		CR1 F400	**LA5F40050**	1.300
		CR1 F500	**LA5F50050**	1.850
		CR1 F630	**LA5F63050**	3.150
	4-pole	CR1 F1504	**LA5F150450**	0.660
		CR1 F1854	**LA5F185450**	0.910
		CR1 F2654	**LA5F265450**	1.220
		CR1 F4004	**LA5F400450**	1.740
		CR1 F5004	**LA5F500450**	2.500
		CR1 F6304	**LA5F630450**	4.200

(1) Set containing the following (per pole): 2 fixed contacts, 1 moving contact , 2 deflectors, 1 back-plate, clamping screws and washers.

TeSys contactors

TeSys CR1 F magnetic latching contactors

a.c. or d.c. supply coils

501470_1.eps

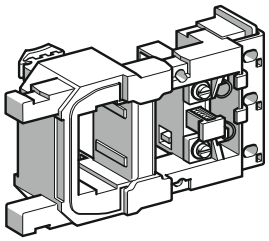

LX0 FF009

501471_1.eps

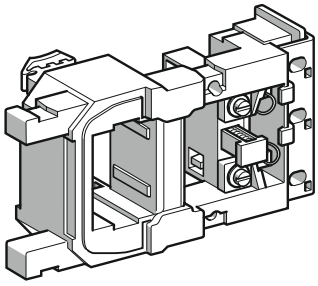

LX0 FH009

Standard coils

Usual voltages		Resistance of winding at θ = 20 °C		Reference	Voltage code	Weight
50…400 Hz or ⎓	50 Hz, 60 Hz	Latching	Unlatching			
V	V	Ω	Ω			kg
For contactors CR1 F150						
48	–	1.98	230.8	**LX0FF005**	E7	0.440
110	–	9.35	1453	**LX0FF006**	F7	0.440
127	–	11.61	1788	**LX0FF007**	G7	0.440
208	–	23.50	4098	**LX0FF020**	L7	0.440
220/230	–	37.55	5139	**LX0FF008**	M7	0.440
–	240	45.16	6544	**LX0FF009**	U7	0.440
–	380/400	114.10	12 447	**LX0FF010**	Q7	0.440
–	415	139.50	16 717	**LX0FF011**	N7	0.440
For contactors CR1 F185						
48	–	1.42	220	**LX0FG005**	E7	0.560
110	–	6.92	1339	**LX0FG006**	F7	0.560
127	–	8.45	1676	**LX0FG007**	G7	0.560
208	–	21.30	3169	**LX0FG020**	L7	0.560
220/230	–	26.27	4729	**LX0FG008**	M7	0.560
–	240	32.95	4729	**LX0FG009**	U7	0.560
–	380/400	82.29	11 885	**LX0FG010**	Q7	0.560
–	415	102.30	14 305	**LX0FG011**	N7	0.560
For contactors CR1 F265						
48	–	1.34	183.4	**LX0FH005**	E7	0.780
110	–	6.90	1031	**LX0FH006**	F7	0.780
127	–	8.56	1325	**LX0FH007**	G7	0.780
208	–	20.20	2654	**LX0FH020**	L7	0.780
220/230	–	25.77	4090	**LX0FH008**	M7	0.780
–	240	33.03	5002	**LX0FH009**	U7	0.780
–	380/400	78.39	11 803	**LX0FH010**	Q7	0.780
–	415	102.9	15 006	**LX0FH011**	N7	0.780
For contactors CR1 F400						
48	–	1.32	90.5	**LX0FJ005**	E7	1.120
110	–	8.09	813	**LX0FJ006**	F7	1.120
127	–	9.79	1027	**LX0FJ007**	G7	1.120
208	–	24.40	2643	**LX0FJ020**	L7	1.120
220/230	–	30.14	3309	**LX0FJ008**	M7	1.120
–	240	37.02	4074	**LX0FJ009**	U7	1.120
–	380/400	94.80	9380	**LX0FJ010**	Q7	1.120
–	415	121.10	11 763	**LX0FJ011**	N7	1.120
For contactors CR1 F500						
48	–	1.57	166	**LX0FK005**	E7	1.220
110	–	7.53	916	**LX0FK006**	F7	1.220
127	–	9.56	1159	**LX0FK007**	G7	1.220
208	–	23.60	2981	**LX0FK020**	L7	1.220
220/230	–	28.81	3733	**LX0FK008**	M7	1.220
–	240	35.67	4595	**LX0FK009**	U7	1.220
–	380/400	89.56	10 570	**LX0FK010**	Q7	1.220
–	415	112.06	13 256	**LX0FK011**	N7	1.220
For contactors CR1 F630						
48	–	0.87	204	**LX0FL005**	E7	1.460
110	–	5.20	1423	**LX0FL006**	F7	1.460
127	–	6.45	1830	**LX0FL007**	G7	1.460
208	–	20.20	2961	**LX0FL020**	L7	1.460
220/230	–	25.36	4603	**LX0FL008**	M7	1.460
–	240	25.36	5658	**LX0FL009**	U7	1.460
–	380/400	60.95	10 676	**LX0FL010**	Q7	1.460
–	415	77.97	13 003	**LX0FL011**	N7	1.460

TeSys contactors

TeSys CR1 F magnetic latching contactors

a.c. or d.c. supply coils

TeSys CR1 F

5014472_1.eps

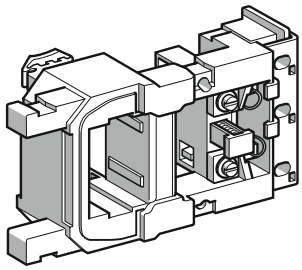

LX0 FF030

Special coils

Coils with two windings with common point, allowing the use of two separate power sources for latching and unlatching.

Coil voltages at 50 Hz, 60 Hz, 400 Hz or ⎓		Resistance of winding at θ = 20 °C		Reference	Voltage code	Weight
Latching	Unlatching	Latching	Unlatching			
V	V	Ω	Ω			kg
For contactors CR1 F150						
220	24	29.5	39.5	**LX0FF224**	MB7	0.440
For contactors CR1 F185						
220	24	26.5	19	**LX0FG224**	MB7	0.560
For contactors CR1 F265						
220	24	26	29.5	**LX0FH224**	MB7	0.780
For contactors CR1 F400						
220	24	30	23	**LX0FJ224**	MB7	1.120
For contactors CR1 F500						
220	24	29	26	**LX0FK224**	MB7	1.220
For contactors CR1 F630						
220	24	26	41	**LX0FL224**	MB7	1.460

Coils with low inrush consumption

Usual voltages ⎓	Resistance of winding at θ = 20 °C		Reference	Voltage code	Weight
	Latching	Unlatching			
V	Ω	Ω			kg
For contactors CR1 F150					
48	4.56	140.56	**LX0FF055**	EZ7	0.440
110	22.37	706.44	**LX0FF056**	FZ7	0.440
127	35.54	1086.36	**LX0FF057**	GZ7	0.440
220	89.85	3342.51	**LX0FF058**	MZ7	0.440
For contactors CR1 F185					
48	5.19	106.54	**LX0FG055**	EZ7	0.570
110	25.50	536.26	**LX0FG056**	FZ7	0.570
127	32.75	732.64	**LX0FG057**	GZ7	0.570
220	102.44	2378.62	**LX0FG058**	MZ7	0.570
For contactors CR1 F265					
48	5.19	74.26	**LX0FH055**	EZ7	0.800
110	25	364.61	**LX0FH056**	FZ7	0.800
127	30.98	458.45	**LX0FH057**	GZ7	0.800
220	97.89	1344.46	**LX0FH058**	MZ7	0.800
For contactors CR1 F400					
48	5.05	36.36	**LX0FJ055**	EZ7	1.150
110	25.39	171.49	**LX0FJ056**	FZ7	1.150
127	31.86	221.20	**LX0FJ057**	GZ7	1.150
220	98.19	648.79	**LX0FJ058**	MZ7	1.150
For contactors CR1 F500					
48	4.42	41	**LX0FK055**	EZ7	1.270
110	22.74	193.36	**LX0FK056**	FZ7	1.270
127	28.25	313.60	**LX0FK057**	GZ7	1.270
220	85.12	918.68	**LX0FK058**	MZ7	1.270
For contactors CR1 F630					
48	3.94	59.17	**LX0FL055**	EZ7	1.500
110	19.36	365.33	**LX0FL056**	FZ7	1.500
127	25.39	452.27	**LX0FL057**	GZ7	1.500
220	74.44	1071.43	**LX0FL058**	MZ7	1.500

TeSys contactors

TeSys F reversing contactors and changeover contactor pairs

Components for assembling 3-pole reversing contactors and changeover contactor pairs, for customer assembly

Horizontally mounted	Mechanical interlocks	Sets of power connections	
		Reversing contactors	3-pole changeover contactor pairs (1)
Reversers assembled using 2 contactors of identical rating, type :	LA9 F●970 (2)	LA9 F●●●76 (2)	LA9 F●●●82 (2)
LC1 F115 **LC1 F150** **LC1 F185** **LC1 F225** **LC1 F265** **LC1 F330** **LC1 F400** **LC1 F500** **LC1 F630** **LC1 F800**	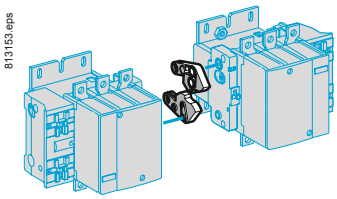	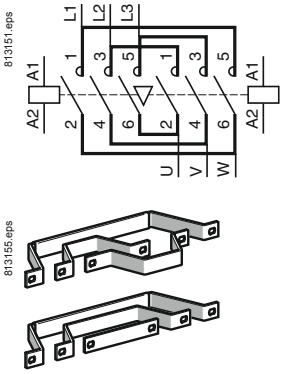 	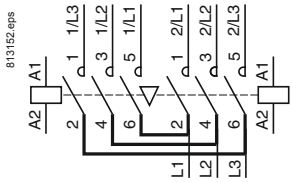 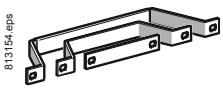

Vertically mounted	Mechanical interlocks	
Reversers assembled using 2 contactors of identical rating, type :	LA9 FF4F LA9 FG4G	LA9 FH4H LA9 FJ4J LA9 FK4K LA9 FL4L
LC1 F115 **LC1 F150** **LC1 F185** **LC1 F225** **LC1 F265** **LC1 F330** **LC1 F400** **LC1 F500** **LC1 F630** **LC1 F800**	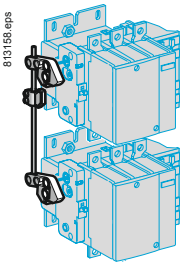	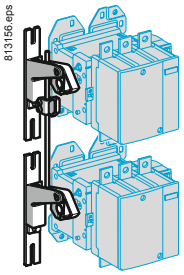
Reversers assembled using 2 contactors of different ratings, see page B9/38		
LC1 F780	LA9 FX970	
	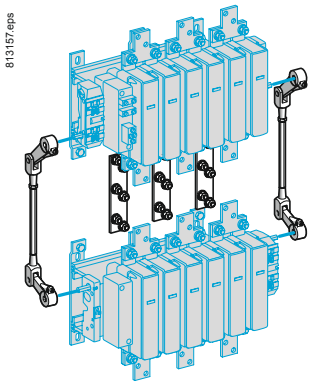	

(1) For 4-pole changeover contactor pairs, see pages B9/38 and B9/39.
(2) Complete references: see page B9/37.

TeSys contactors

TeSys F reversing contactors and changeover contactor pairs

Control circuit: a.c. or d.c. supply

Contactor type (1)	Set of power connections		Mechanical interlock	
	Reference	Weight kg	Kit reference	Weight kg
Reversers assembled using 2 contactors of identical rating				
For assembly of 3-pole reversing contactors for motor control				
Horizontally mounted				
LC1 F115	**LA9FF976**	0.600	**LA9FF970**	0.060
LC1 F150	**LA9F15076**	0.600	**LA9FF970**	0.060
LC1 F185	**LA9FG976**	0.780	**LA9FG970**	0.060
LC1 F225	**LA9F22576**	1.500	**LA9FG970**	0.060
LC1 F265	**LA9FH976**	1.500	**LA9FJ970**	0.140
LC1 F330	**LA9FJ976**	2.100	**LA9FJ970**	0.140
LC1 F400	**LA9FJ976**	2.100	**LA9FJ970**	0.140
LC1 F500	**LA9FK976**	2.350	**LA9FJ970**	0.140
LC1 F630 or F800	**LA9FL976**	3.800	**LA9FL970**	0.150
Vertically mounted				
LC1 F115 or F150	(2)	–	**LA9FF4F**	0.345
LC1 F185	(2)	–	**LA9FG4G**	0.350
LC1 F225	(2)	–	**LA9FG4G**	0.350
LC1 F265 or F330	(2)	–	**LA9FH4H**	1.060
LC1 F400	(2)	–	**LA9FJ4J**	1.200
LC1 F500	(2)	–	**LA9FK4K**	1.200
LC1 F630 or F800	(2)	–	**LA9FL4L**	1.220
LC1 F780	(3)	–	**LA9FX970** (3)	6.100
For assembly of 3-pole changeover contactor pairs (4)				
Horizontally mounted				
LC1 F115	**LA9FF982**	0.460	**LA9FF970**	0.060
LC1 F150	**LA9F15082**	0.460	**LA9FF970**	0.060
LC1 F185	**LA9FG982**	0.610	**LA9FG970**	0.060
LC1 F225	**LA9F22582**	1.200	**LA9FG970**	0.060
LC1 F265	**LA9FH982**	1.200	**LA9FJ970**	0.140
LC1 F330	**LA9FJ982**	1.800	**LA9FJ970**	0.140
LC1 F400	**LA9FJ982**	1.800	**LA9FJ970**	0.140
LC1 F500	**LA9FK982**	2.300	**LA9FJ970**	0.140
LC1 F630 or F800	**LA9FL982**	3.400	**LA9FL970**	0.150
Vertically mounted				
LC1 F115 or F150	(2)	–	**LA9FF4F**	0.345
LC1 F185	(2)	–	**LA9FG4G**	0.350
LC1 F225	(2)	–	**LA9FG4G**	0.350
LC1 F265 or F330	(2)	–	**LA9FH4H**	1.060
LC1 F400	(2)	–	**LA9FJ4J**	1.200
LC1 F500	(2)	–	**LA9FK4K**	1.200
LC1 F630 or F800	(2)	–	**LA9FL4L**	1.220
LC1 F780	(3)	–	**LA9FX970** (3)	7.800

*(1) To order the 2 contactors: see pages B9/2 and B9/3. For the 2 auxiliary contact blocks **LAD N●1** required to obtain electrical interlocking between the 2 contactors, see page B9/11. For accessories, see pages B9/12 to B9/14.*

(2) All power connections are to be made by the customer.

(3) Double mechanical interlock mechanism with 2 interlock connecting rods and 3 power connecting links.

(4) For assembly of 4-pole changeover contactor pairs, see pages B9/38 and B9/39.

TeSys contactors

TeSys F changeover contactor pairs

Components for assembling 3 and 4-pole changeover contactor pairs, for customer assembly

Horizontally mounted

Contactor pairs assembled using 2 contactors of identical rating, type :
LC1 F1154
LC1 F1504
LC1 F1854
LC1 F2254
LC1 F2654
LC1 F3304
LC1 F4004
LC1 F5004
LC1 F6304

Mechanical interlocks

LA9 F●970 (2)

813167.eps

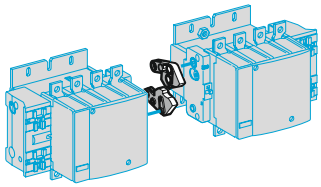

Sets of power connections

4-pole changeover contactor pairs (1)

LA9 F●●●77 (2)

813168.eps

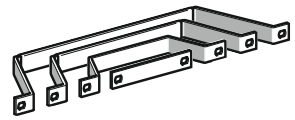

813166.eps

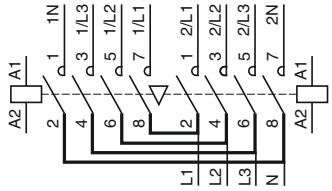

Vertically mounted

Contactor pairs assembled using 2 contactors of identical rating, type :
LC1 F1154
LC1 F1504
LC1 F1854
LC1 F2254
LC1 F2654
LC1 F3304
LC1 F4004
LC1 F5004
LC1 F6304

Mechanical interlocks

Assembly A

LA9 FF4F
LA9 FG4G

813160.eps

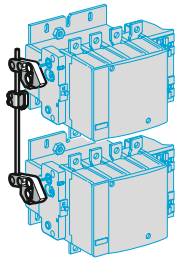

Assembly B

LA9 FH4H
LA9 FJ4J
LA9 FK4K
LA9 FL4L

813159.eps

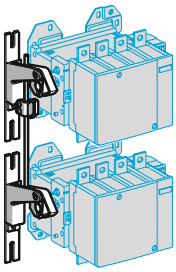

Assembly C

LA9 FX971

813161.eps

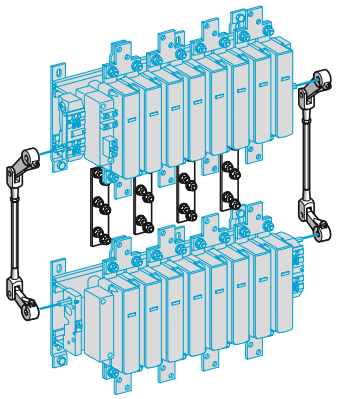

Contactor pairs assembled using 2 contactors of different ratings, type :
LC1 F115 or **F1154**
LC1 F150 or **F1504**
LC1 F185 or **F1854**
LC1 F225 or **F2254**
LC1 F265 or **F2654**
LC1 F330 or **F3304**
LC1 F400 or **F4004**
LC1 F500 or **F5004**
LC1 F630 or **F6304**
LC1 F800

Assembly A

LA9 FG4F

813163.eps

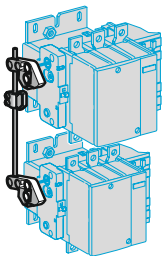

Assembly B

LA9 FH4F, LA9 FH4G
LA9 FJ4F, LA9 FJ4G
LA9 FK4F, LA9 FK4G
LA9 FL4F, LA9 FL4G

813165.eps

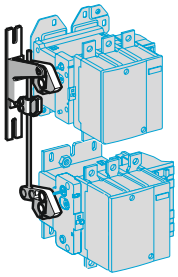

Assembly C

LA9 FJ4H
LA9 FK4H, LA9 FK4J
LA9 FL4H, LA9 FL4J and LA9 FL4K

813162.eps

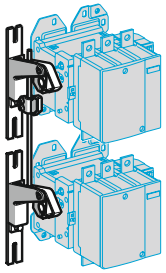

Contactor pairs assembled using 3 contactors of identical or different ratings, type :
LC1 F115 or **F1154**
LC1 F150 or **F1504**
LC1 F185 or **F1854**
LC1 F225 or **F2254**
LC1 F265 or **F2654**
LC1 F330 or **F3304**
LC1 F400 or **F4004**
LC1 F500 or **F5004**
LC1 F630 or **F6304**
LC1 F800

LA9 F●4●4● : see pages B9/40 and B9/41.

813164.eps

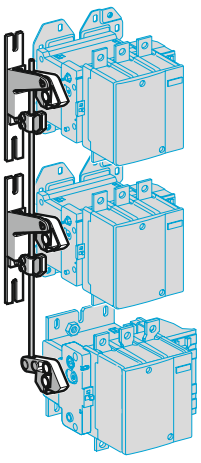

Important: the contactor ratings must be in decreasing size from top to bottom.

(1) For 3-pole changeover contactor pairs, see pages B9/36 and B9/37.
(2) Complete references: see page B9/39.

TeSys contactors

TeSys F changeover contactor pairs

Components for assembling 3 and 4-pole changeover contactor pairs, for customer assembly

Contactor pairs assembled using 2 contactors of identical rating

For assembly of 4-pole changeover contactor pairs (1)

Contactor type (2)	Set of power connections		Mechanical interlock	
	Reference	Weight kg	Kit reference	Weight kg
Horizontally mounted				
LC1 F1154	**LA9FF977**	0.460	**LA9FF970**	0.060
LC1 F1504	**LA9F15077**	0.460	**LA9FF970**	0.060
LC1 F1854	**LA9FG977**	0.610	**LA9FG970**	0.060
LC1 F2254	**LA9F22577**	1.200	**LA9FG970**	0.060
LC1 F2654	**LA9FH977**	1.200	**LA9FJ970**	0.140
LC1 F3304	**LA9FJ977**	1.800	**LA9FJ970**	0.140
LC1 F4004	**LA9FJ977**	1.800	**LA9FJ970**	0.140
LC1 F5004	**LA9FK977**	2.300	**LA9FJ970**	0.140
LC1 F6304	**LA9FL977**	3.400	**LA9FL970**	0.150
Vertically mounted				
LC1 F1154 or F1504	(3)	–	**LA9FF4F**	0.345
LC1 F1854	(3)	–	**LA9FG4G**	0.350
LC1 F2254	(3)	–	**LA9FG4G**	0.350
LC1 F2654 or F3304	(3)	–	**LA9FH4H**	1.060
LC1 F4004	(3)	–	**LA9FJ4J**	1.200
LC1 F5004	(3)	–	**LA9FK4K**	1.200
LC1 F6304	(3)	–	**LA9FL4L**	1.220
LC1 F7804	(4)	–	**LA9FX971** (4)	7.800

Contactor pairs assembled using 2 contactors of different ratings

For assembly of 3 or 4-pole changeover contactor pairs

Contactor type (1)		Mechanical interlock	
At bottom	At top	Kit reference	Weight kg
Vertically mounted			
LC1 F115 or F1154 or LC1 F150 or F1504	LC1 F185 or F1854	**LA9FG4F**	0.350
	LC1 F225 or F2254	**LA9FG4F**	0.350
	LC1 F265 or F2654	**LA9FH4F**	0.870
	LC1 F330 or F3304	**LA9FH4F**	0.870
	LC1 F400 or F4004	**LA9FJ4F**	0.930
	LC1 F500 or F5004	**LA9FK4F**	0.940
	LC1 F630, F6304 or F800	**LA9FL4F**	0.940
LC1 F185 or F1854 or LC1 F225 or F2254	LC1 F265 or F2654	**LA9FH4G**	0.860
	LC1 F330 or F3304	**LA9FH4G**	0.860
	LC1 F400 or F4004	**LA9FJ4G**	0.940
	LC1 F500 or F5004	**LA9FK4G**	0.940
	LC1 F630, F6304 or F800	**LA9FL4G**	0.950
LC1 F265 or F2654 or LC1 F330 or F3304	LC1 F400 or F4004	**LA9FJ4H**	1.130
	LC1 F500 or F5004	**LA9FK4H**	1.130
	LC1 F630, F6304 or F800	**LA9FL4H**	1.140
LC1 F400 or F4004	LC1 F500 or F5004	**LA9FK4J**	1.200
	LC1 F630 or F6304 or F800	**LA9FL4J**	1.210
LC1 F500 or F5004	LC1 F630 or F6304 or F800	**LA9FL4K**	1.210

For assembly of reversers using 3 contactors, vertically mounted

See pages B9/40 and B9/41.

(1) For assembly of 3-pole changeover contactor pairs, see pages B9/36 and B9/37.
(2) To order the 2 contactors: see pages B9/2 and B9/3. For the 2 auxiliary contact blocks ***LAD N●1*** *required to obtain electrical interlocking between the 2 contactors, see page B9/11. For accessories, see pages B9/12 to B9/14.*
(3) All power connections are to be made by the customer.
(4) Double mechanical interlock mechanism with 2 interlock connecting rods and 4 power connecting links.

TeSys contactors

TeSys F contactors

Accessories for assembly of reversing contactors and changeover contactor pairs using 3 contactors, vertically mounted - for customer assembly

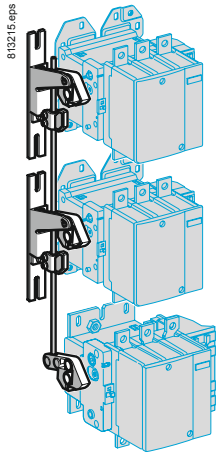

LA9 F●4●4●

Closing of one of the 3 contactors prevents closing of the other 2.

Mechanical interlock kits

Contactor type (1)			Mechanical interlock (2)	
Top	Middle	Bottom	Kit reference (3)	Weight kg
LC1 F115, F150, F1154 or F1504	LC1 F115, F150, F1154 or F1504	LC1 F115, F150, F1154 or F1504	**LA9FF4F4F**	0.554
LC1 F185, F225, F1854 or F2254	LC1 F115, F150, F1154 or F1504	LC1 F115, F150, F1154 or F1504	**LA9FG4F4F**	0.559
	LC1 F185, F225, F1854 or F2254	LC1 F115, F150, F1154 or F1504	**LA9FG4G4F**	0.559
		LC1 F185, F225, F1854 or F2254	**LA9FG4G4G**	0.562
LC1 F265, F330, F2654 or F3304	LC1 F115, F150, F1154 or F1504	LC1 F115, F150, F1154 or F1504	**LA9FH4F4F**	1.350
	LC1 F185, F225, F1854 or F2254	LC1 F115, F150, F1154 or F1504	**LA9FH4G4F**	1.375
		LC1 F185, F225, F1854 or F2254	**LA9FH4G4G**	1.375
	LC1 F265, F330, F2654 or F3304	LC1 F115, F150, F1154 or F1504	**LA9FH4H4F**	1.524
		LC1 F185, F225, F1854 or F2254	**LA9FH4H4G**	1.527
		LC1 F265, F330, F2654 or F3304	**LA9FH4H4H**	1.684
LC1 F400, F4002 or F4004	LC1 F115, F150, F1154 or F1504	LC1 F115, F150, F1154 or F1504	**LA9FJ4F4F**	1.421
	LC1 F185, F225, F1854 or F2254	LC1 F115, F150, F1154 or F1504	**LA9FJ4G4F**	1.424
		LC1 F185, F225, F1854 or F2254	**LA9FJ4G4G**	1.428
	LC1 F265, F330, F2654 or F3304	LC1 F115, F150, F1154 or F1504	**LA9FJ4H4F**	1.595
		LC1 F185, F225, F1854 or F2254	**LA9FJ4H4G**	1.598
		LC1 F265, F330, F2654 or F3304	**LA9FJ4H4H**	1.755
	LC1 F400, F4002 or F4004	LC1 F115, F150, F1154 or F1504	**LA9FJ4J4F**	1.666
		LC1 F185, F225, F1854 or F2254	**LA9FJ4J4G**	1.669
		LC1 F265, F330, F2654 or F3304	**LA9FJ4J4H**	1.829
		LC1-F400, F4002 or F4004	**LA9FJ4J4J**	1.890
LC1 F500, F5002 or F5004 (continued on page B9/41)	LC1 F115, F150, F1154 or F1504	LC1 F115, F150, F1154 or F1504	**LA9FK4F4F**	1.421
	LC1 F185, F225, F1854 or F2254	LC1 F115, F150, F1154 or F1504	**LA9FK4G4F**	1.424
		LC1 F185, F225, F1854 or F2254	**LA9FK4G4G**	1.428
	LC1 F265, F330, F2654 or F3304	LC1 F115, F150, F1154 or F1504	**LA9FK4H4F**	1.595
		LC1 F185, F225, F1854 or F2254	**LA9FK4H4G**	1.598
		LC1 F265, F330, F2654 or F3304	**LA9FK4H4H**	1.755
	LC1 F400, F4002 or F4004	LC1 F115, F150, F1154 or F1504	**LA9FK4J4F**	1.666
		LC1 F185, F225, F2654 or F3304	**LA9FK4J4G**	1.669
		LC1 F265, F330, F2654 or F3304	**LA9FK4J4H**	1.829
		LC1 F400, F4002 or F4004	**LA9FK4J4J**	1.896
	LC1 F500, F5002 or F5004	LC1 F115, F150, F1154 or F1504	**LA9FK4K4F**	1.666

*(1) To order the 3 contactors, see pages B9/2 and B9/3. For auxiliary contact blocks **LAD N02** used for electrical locking, see page B9/11. For accessories, see pages B9/12 to B9/14.*
(2) Minimum distances between contactors, see page B9/41.
(3) The kit contains the lever arms, the 2 x Ø8 mm rods and all parts required for assembly.

Selection:
pages B10/50 to B10/73

TeSys contactors

TeSys F contactors

Accessories for assembly of reversing contactors and changeover contactor pairs using 3 contactors, vertically mounted - for customer assembly

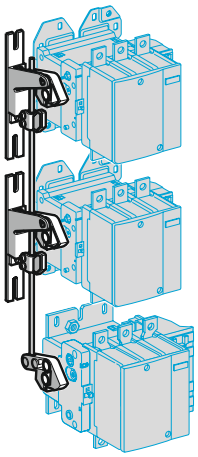

LA9 F●4●4●

Mechanical interlock kits (continued)

Contactor type (1)			Mechanical interlock (2)	
Top	Middle	Bottom	Kit reference (3)	Weight kg
LC1 F500, F5002 or F5004 *(continued)*	LC1 F500, F5002 or F5004	LC1 F185, F225, F1854 or F2254	**LA9FK4K4G**	1.669
		LC1 F265, F330, F2654 or F3304	**LA9FK4K4H**	1.825
		LC1 F400, F4002 or F4004	**LA9FK4K4J**	1.896
		LC1-F500, F5002 or F5004	**LA9FK4K4K**	1.896
LC1 F630, F800, F6302 or F6304	LC1 F115, F150, F1154 or F1504	LC1 F115, F150, F1154 or F1504	**LA9FL4F4F**	1.428
	LC1 F185, F225, F1854 or F2254	LC1 F115, F150, F1154 or F1504	**LA9FL4G4F**	1.431
		LC1 F185, F225, F1854 or F2254	**LA9FL4G4G**	1.436
	LC1 F265, F330, F2654 or F3304	LC1 F115, F150, F1154 or F1504	**LA9FL4H4F**	1.602
		LC1 F185, F225, F1854 or F2254	**LA9FL4H4G**	1.606
		LC1 F265, F330, F2654 or F3304	**LA9FL4H4H**	1.751
	LC1 F400, F4002 or F4004	LC1 F115, F150, F1154 or F1504	**LA9FL4J4F**	1.673
		LC1 F185, F225, F1854 or F2254	**LA9FL4J4G**	1.676
		LC1 F265, F330, F2654 or F3304	**LA9FL4J4H**	1.832
		LC1 F400, F4002 or F4004	**LA9FL4J4J**	1.903
	LC1-F500, F5002 or F5004	LC1 F115, F150, F1154 or F1504	**LA9FK4K4F**	1.666
		LC1 F185, F225, F1854 or F2254	**LA9FK4K4G**	1.669
		LC1 F265, F330, F2654 or F3304	**LA9FK4K4H**	1.825
		LC1 F400, F4002 or F4004	**LA9FK4K4J**	1.896
		LC1-F500, F5002 or F5004	**LA9FK4K4K**	1.896
	LC1 F630, F800, F6302 or F6304	LC1 F115, F150, F1154 or F1504	**LA9FL4L4F**	1.680
		LC1 F185, F225, F1854 or F2254	**LA9FL4L4G**	1.683
		LC1 F265, F330, F2654 or F3304	**LA9FL4L4H**	1.910
		LC1 F400, F4002 or F4004	**LA9FL4L4J**	1.896
		LC1 F500, F5002 or F5004	**LA9FL4L4K**	1.896
		LC1 F630, F800, F6302, or F6304	**LA9FL4L4L**	1.920

*(1) To order the 3 contactors, see pages B9/2 and B9/3. For auxiliary contact blocks **LAD N02** used for electrical locking, see page B9/11. For accessories, see pages B9/12 to B9/14.*

(2) Minimum distances between contactors.
This is the distance, in mm, between the centres of two adjacent contactors (between the top and middle contactors or between the middle and bottom contactors).

Contactor

Bottom or top	Middle					
	LC1 F115 or F150	LC1 F185 or F225	LC1 F265 or F330	LC1 F400	LC1 F500	LC1 F630 or F800
LC1 F115 or F150	200	210	240	250	270	320
LC1 F185 or F225	210	220	250	250	270	330
LC1 F265 or F330	240	250	250	260	280	350
LC1 F400	250	250	260	260	280	320
LC1 F500	270	270	280	280	300	340
LC1 F630 or F800	320	330	350	320	340	380

(3) The kit contains the lever arms, the 2 x Ø8 mm rods and all parts required for assembly.

High power contactors

Selection:
pages B10/50 to B10/73

TeSys contactors

High power changeover contactor pairs for distribution

Control circuit: a.c. or d.c. supply

General

A changeover contactor pair ensures continuity of operation of an installation and energy management.

It switches between:
■ a power supply source M (main) which normally supplies the installation
■ and a power supply source S (standby) which may be an incoming line from an additional network or a generating set.

The supply sources may be 3-phase or 3-phase + neutral.

Supply - 3-phase

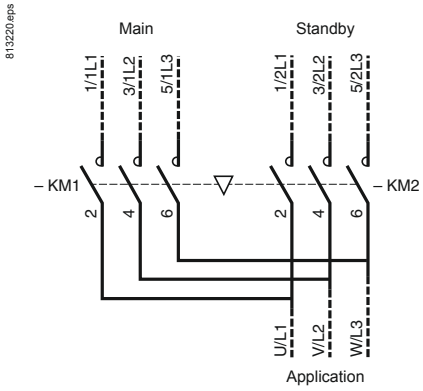

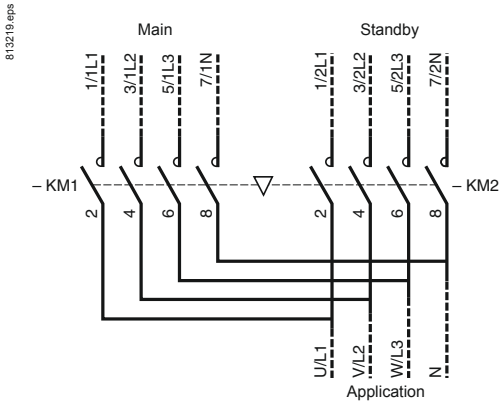

The 2 contactors must be mechanically and electrically interlocked to prevent any paralleling, even transitory, of the two supplies.

Dimensions:
pages B9/104 and B9/105

Schemes:
page B9/105

TeSys contactors

High power changeover contactor pairs for distribution

Control circuit: a.c. or d.c. supply

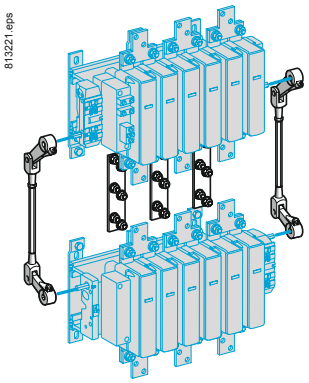

LA9 FX970

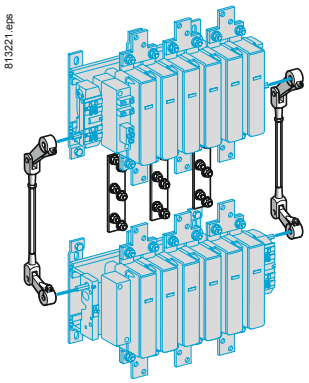

LA9 FX971

Changeover contactor pairs for customer assembly: 3-phase

Vertically mounted.
Maximum operational voltage: 1000 V.
Utilisation category: AC-1.
Maximum temperature in the vicinity of the devices: 40 °C.

Maximum operational current AC-1		Contactors (1)		Mechanical interlock (2)
Main	Standby	Main	Standby	
3-phase	3-phase	Reference	Reference	Reference
1600 A	1000 A	**LC1F780**	**LC1F6309**	**LA9FX970**
1600 A	1600 A	**LC1F780**	**LC1F780**	**LA9FX970**

Changeover contactor pairs for customer assembly: 3-phase + neutral

Vertically mounted.
Maximum operational voltage: 1000 V.
Utilisation category: AC-1.
Maximum temperature in the vicinity of the devices: 40 °C.

Maximum operational current AC-1		Contactors (1)		Mechanical interlock (2)
Main	Standby	Main	Standby	
3-phase + N	3-phase + N	Reference	Reference	Reference
1600 A + 1000 A	1000 A + 1000 A	**LC1F78041**	**LC1F63049**	**LA9FX970** (3)
1600 A + 1000 A	1600 A + 1000 A	**LC1F78041**	**LC1F78040**	**LA9FX970** (3)
1600 A + 1600 A	1000 A + 1000 A	**LC1F7804**	**LC1F63049**	**LA9FX971**
1600 A + 1600 A	1600 A + 1600 A	**LC1F7804**	**LC1F7804**	**LA9FX971**

(1) Coils to be ordered separately, see pages B9/17 to B9/26.
*(2) Double mechanical interlock mechanism with 2 interlock connecting rods and 4 power connecting links. To order the the 2 auxiliary contact blocks **LAD N●1** required to obtain electrical interlocking between the 2 contactors: see page B9/11.*
(3) Neutral connecting link not supplied (to be ordered separately).

Dimensions:
pages B9/104 and B9/105

Schemes:
page B9/105

TeSys F

Technical Data for Designers

Contents

TeSys F contactors:
- > characteristics ..... B9/46 to B9/53
- > dimensions ..... B9/54 to B9/59
- > schemes..... B9/60 and B9/61

TeSys V vacuum contactors:
- > selection and characteristics..... B9/62 and B9/63
- > dimensions ..... B9/64 and B9/65
- > schemes..... B9/64 to B9/67

TeSys FG shockproof contactors:
- > presentation and selection..... B9/68 to B9/75
- > characteristics ..... B9/76 to B9/83
- > dimensions and schemes..... B9/84 and B9/85

TeSys CR1F magnetic latching contactors:
- > selection..... B9/86 to B9/91
- > characteristics ..... B9/92 to B9/95
- > dimensions ..... B9/96 to B9/99

TeSys F - reversing contactors:
- > dimensions .....B9/100 to B9/102
- > schemes..... B9/103

TeSys F - high power changeover contactor pairs for distribution:
- > dimensions .....B9/104 and B9/105
- > schemes..... B9/105

TeSys contactors
TeSys F contactors
Utilisation category AC-3 (115 to 1000 A), AC-1 (200 to 2600 A)
Control circuit: a.c. or d.c. supply

Environment

Contactor type			LC1 F115	LC1 F150	LC1 F185
Rated insulation voltage (Ui)	Conforming to IEC 60947-4-1	V	1000	1000	1000
	Conforming to VDE 0110 gr C	V	1500	1500	1500
Rated impulse withstand voltage (Uimp)	Coil not connected to the power circuit	kV	8	8	8
Conforming to standards			EN 60947-1, EN 60947-4-1, IEC 60947-1, IEC 60947-4-1, JEM 1038		
Product certifications			CSA, UL, BV, GL, DNV, RINA, RMROS, LROS, CCC		
Degree of protection	Conforming to IEC 60529		IP 2X front face with shrouds LA9 F		
	Conforming to VDE 0106		Front face protected against direct finger contact with shrouds LA9 F		
Protective treatment	Standard version		"TH"		
Ambient air temperature around the device	Storage	°C	-60…+80		
	Operation	°C	-5…+55		
	Permissible at Uc (1)	°C	-40…+70		
Maximum operating altitude	Without derating	m	3000		
Operating positions	Without derating		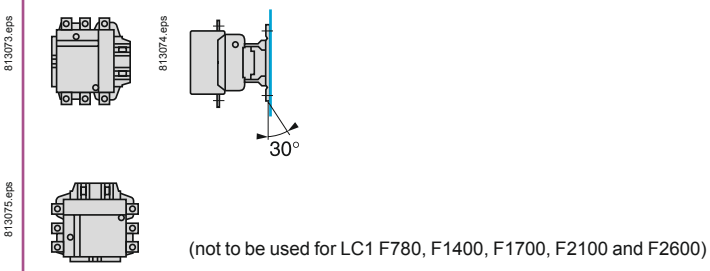 813073.eps 813074.eps 30° 813075.eps (not to be used for LC1 F780, F1400, F1700, F2100 and F2600)		
	With derating		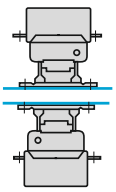 813076.eps 813077.eps Apply the following derating coefficients: 0.75 on the pull-in voltage, 0.9 on the drop-out voltage and 0.8 on the operational current in AC-1. Apply the following derating coefficients: 1.15 on the pull-in voltage, 1.1 on the drop-out voltage and 0.8 on the operational current in AC-1. In either case: neither the making and breaking capacities nor the electrical and mechanical durabilities can be assured.		
	Not to be used		 813078.eps		
Shock resistance (2) 1/2 sine wave = 11 ms	Contactor open		9 gn	9 gn	7 gn
	Contactor closed		15 gn	15 gn	15 gn
Vibration resistance (2) 5…300 Hz	Contactor open		2 gn	2 gn	2 gn
	Contactor closed		6 gn	6 gn	5 gn

(1) In these conditions, it is recommended that LX9 F coils be used for contactor sizes F115 to F225.

(2) In the least favourable direction, without change of contact state (coil at Uc). Where higher resistance to mechanical shock is required, select shock-proof contactors. Please consult your Regional Sales Office.

Selection: pages B10/50 to B10/73 | References: pages B9/2 and B9/3 | Dimensions: pages B9/54 to B9/56 | Schemes: page B9/61

TeSys contactors

TeSys F contactors

Utilisation category AC-3 (115 to 1000 A), AC-1 (200 to 2600 A)

Control circuit: a.c. or d.c. supply

LC1 F225	LC1 F265	LC1 F330	LC1 F400	LC1 F500	LC1 F630	LC1 F780	LC1 F800	LC1 F1000	LC1 F1250	LC1 F1400	LC1 F1700	LC1 F2100	LC1 F2600
1000	1000	1000	1000	1000	1000	1000	1000	1000	1000	1000	1000	1000	1000
1500	1500	1500	1500	1500	1500	1500	1500	1500	1500	1500	1500	1500	1500
8	8	8	8	8	8	8	8	8	8	8	8	8	8
EN 60947-1, EN 60947-4-1, IEC 60947-1, IEC 60947-4-1, JEM 1038 (except for LC1 F1000)													
CSA, UL, BV, GL, DNV, RINA, RMROS, LROS, CCC							UL, CSA, GL, LROS	CSA, CCC	CSA, CCC, ETL-UL				
IP 20 front face with shrouds LA9 F								–	–				
Front face protected against direct finger contact with shrouds LA9 F								–	–				
"TH"													
-60…+80							-60…+80	-60…+80					
-5…+55							-5…+55	-5…+40					
-40…+70							-5…+55	-40…+60					
3000													

813073.eps



813074.eps

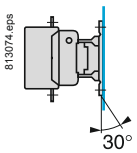

813075.eps



(not to be used for LC1 F780, F1000, F1400, F1700, F2100 and F2600)

813076.eps

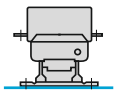

813077.eps

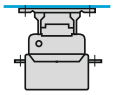

Apply the following derating coefficients: 0.75 on the pull-in voltage, 0.9
on the drop-out voltage and 0.8 on the operational current in AC-1.

Apply the following derating coefficients: 1.15 on the pull-in voltage, 1.1
on the drop-out voltage and 0.8 on the operational current in AC-1.

In either case: neither the making and breaking capacities nor the electrical and mechanical durabilities can be assured.

Not to be used

813078.eps

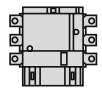

7 gn	6 gn	6 gn	6 gn	9 gn	6 gn	5 gn	6 gn	6 gn	6 gn	6 gn	6 gn	6 gn	6 gn
15 gn	15 gn	15 gn	15 gn	15 gn	15 gn	15 gn	15 gn	15 gn	15 gn	15 gn	15 gn	15 gn	15 gn
2 gn	2 gn	2 gn	1.5 gn	2 gn	2 gn	2.5 gn	2 gn	2 gn	2 gn	2 gn	2 gn	2 gn	2 gn
5 gn	5 gn	5 gn	5 gn	4 gn	4 gn	5.5 gn	4 gn	4 gn	–	–	–	–	–

TeSys contactors
TeSys F contactors
Utilisation category AC-3 (115 to 1000 A), AC-1 (200 to 2600 A)
Control circuit: a.c. or d.c. supply

Pole characteristics

Contactor type				LC1 F115	LC1 F150	LC1 F185	LC1 F225	LC1 F265
Number of poles				3 or 4	3 or 4	3 or 4	3 or 4	3 or 4
Rated operational current (Ie) (Ue ≤ 440 V)	In AC-3, θ ≤ 55 °C		A	115	150	185	225	265
	In AC-1, θ ≤ 40 °C		A	200	250	275	315	350
Rated operational voltage (Ue)	Up to		V	1000	1000	1000	1000	1000
Frequency limits	Of the operational current (1)		Hz	$16^{2/3}$…200	$16^{2/3}$…200	$16^{2/3}$…200	$16^{2/3}$…200	$16^{2/3}$…200
Conventional thermal current	θ ≤ 40 °C		A	200	250	275	315	350
Rated making capacity	I rms conforming to IEC 60947-4-1		A	Making current: 10 x I in AC-3 or 12 x I in AC-4				
Rated breaking capacity	I rms conforming to IEC 60947-4-1		A	Making and breaking current: 8 x I in AC-3 or 10 x I in AC-4				
Maximum permissible current No current flowing for previous 60 minutes, at θ ≤ 40 °C	For 10 s		A	1100	1200	1500	1800	2200
	For 30 s		A	640	700	920	1000	1230
	For 1 min		A	520	600	740	850	950
	For 3 min		A	400	450	500	560	620
	For 10 min		A	320	350	400	440	480
Short-circuit protection by fuses U ≤ 440 V	Motor circuit (type aM)		A	125	160	200	250	315
	With thermal overload relay (type gG)		A	200	200	315	315	500
	gG fuses		A	200	250	315	315	400
Average impedance per pole	At Ith and 50 Hz		mΩ	0.37	0.35	0.33	0.32	0.3
Power dissipation per pole for the above operational currents	AC-3		W	5	8	12	16	21
	AC-1		W	15	22	25	32	37
Connection				Maximum c.s.a.				
	Bar	Number of bars		2	2	2	2	2
		Bar	mm	20 x 3	25 x 3	25 x 3	32 x 4	32 x 4
	Cable with lug		mm^2	95	120	150	185	240
	Cable with connector		mm^2	95	120	150	185	240
	Bolt diameter		mm	Ø6	Ø8	Ø8	Ø10	Ø10
Tightening torque	Power circuit connections		N.m	10	18	18	35	35

(1) Sine wave without interference. Above these values, please consult your Regional Sales Office.
*(2) With set of right-angled connectors **LA9 F2100** (see page B9/13).*
(3) Paralleling of poles must be carried out only in accordance with the fuse manufacturer's recommendations.
*(4) θ ≤ 60 °C with set of right-angled connectors **LA9 F2600** (see page B9/13).*
(5) Ue ≤ 1000 V.

TeSys contactors

TeSys F contactors

Utilisation category AC-3 (115 to 1000 A), AC-1 (200 to 2600 A)

Control circuit: a.c. or d.c. supply

LC1 F330	LC1 F400	LC1 F500	LC1 F630	LC1 F780	LC1 F800	LC1 F1000	LC1 F1250	LC1 F1400	LC1 F1700	LC1 F2100	LC1 F2600
3 or 4	2, 3 or 4	2, 3 or 4	2, 3 or 4	3 or 4	3	3	3	3	3	3	3
330	400	500	630	780	800	1000	-	-	-	-	-
400	500	700	1000	1600	1000	1250	1260 (5)	1400 (5)	1700 (5)	2100 (2)(5)	2600 (4)(5)
1000	1000	1000	1000	1000	1000	1000	1000	1000	1000	1000	1000
$16^{2/3}$…200	$16^{2/3}$…200	$16^{2/3}$…200	$16^{2/3}$…200	$16^{2/3}$…200	$16^{2/3}$…200	$16^{2/3}$…200	$16^{2/3}$…200	$16^{2/3}$…200	$16^{2/3}$…200	$16^{2/3}$…200	$16^{2/3}$…200
400	500	700	1000	1600	1000	1250	1260	1400	1700	2100 (2)	2600 (4)
Making current: 10 x I in AC-3 or 12 x I in AC-4						10 x I in AC-3	Making current: 1.5 x I in AC-1				
Making and breaking current: 8 x I in AC-3 or 10 x I in AC-4						8 x I in AC-3	Making and breaking current: 1.5 x I in AC-1				
2650	3600	4200	5050	6250	5500	10000	8000	8000	10000	10000	12000
1800	2400	3200	4400	5600	4600	7500	5200	6000	7500	7500	9000
1300	1700	2400	3400	4600	3600	5500	4000	4500	5500	5500	7000
900	1200	1500	2200	3000	2600	4200	3000	4000	4200	4200	6000
750	1000	1200	1600	2200	1700	3000	2000	2600	3000	3000	4000
400	400	500	630	800	800	1000	–	–	–	–	–
500	630	800	800	1000	1000	1000	–	–	–	–	–
500	500	800	1000	2 x 800 (3)	1000	1000	1000	2 x 800 (3)	2 x 800 (3)	2 x 1000 (3)	2 x 1250 (3)
0.28	0.26	0.18	0.12	0.10	0.12	0.12	0.12	0.10	0.10	0.10	0.10
31	42	45	48	60	77	100	–	–	–	–	–
44	65	88	120	250	120	120	120	150	200	200	250
Maximum c.s.a.											
2	2	2	2	2	2	3	2	2	3	4	3
30 x 5	30 x 5	40 x 5	60 x 5	100 x 5	60 x 5	100 x 5	100 x 5	100 x 5	100 x 5	100 x 5	100 x 10
240	2 x 150	2 x 240	–	–	–	–	–	–	–	–	–
–	–	–	–	–	–	–	–	–	–	–	–
Ø10	Ø10	Ø10	Ø12	2 x Ø12	Ø12	4 x Ø12 (Ø11.5 with set of right-angled connectors LA9 F2100)					4 x Ø12 (Ø11.5 with set of right-angled connectors LA9 F2600)
35	35	35	58	58	58	58 (35 with set of right-angled connectors LA9 F2100)					58 (35 with set of right-angled connectors LA9 F2600)

TeSys contactors
TeSys F contactors
Utilisation category AC-3 (115 to 1000 A), AC-1 (200 to 2600 A)
Control circuit: a.c. supply

Control circuit characteristics with LX1 or LX9 coil

Contactor type				LC1 F115	LC1 F150	LC1 F185	LC1 F225	LC1 F265
Rated control circuit voltage (Uc)		50 or 60 Hz	V	24…1000				
Control voltage limits (θ ≤ 55 °C) 50 or 60 Hz coils		Operation		0.85…1.1 Uc				–
		Drop-out		0.35…0.55 Uc				–
40…400 Hz coils		Operation		–				0.85…1.1 Uc
		Drop-out		–				0.35…0.55 Uc
Average consumption at 20 °C and at Uc								
∼ 50 Hz	Inrush	50 Hz coil	VA	550	550	805	805	–
		40…400 Hz coil	VA	–	–	–	–	650
		Cos φ		0.3	0.3	0.3	0.3	0.9
	Sealed	50 Hz coil	VA	45	45	55	55	–
		40…400 Hz coil	VA	–	–	–	–	10
		Cos φ		0.3	0.3	0.3	0.3	0.9
∼ 60 Hz	Inrush	60 Hz coil	VA	660	660	970	970	–
		40…400 Hz coil	VA	–	–	–	–	650
		Cos φ		0.3	0.3	0.3	0.3	0.9
	Sealed	60 Hz coil	VA	55	55	66	66	–
		40…400 Hz coil	VA	–	–	–	–	10
		Cos φ		0.3	0.3	0.3	0.3	0.9
Heat dissipation			W	12…16	12…16	18…24	18…24	8
Operating time (1)	Closing "C"		ms	23…35	23…35	20…35	20…35	40…65
	Opening "O"		ms	5…15	5…15	7…15	7…15	100…170
Mechanical durability at Uc	In millions of operating cycles			10	10	10	10	10
Maximum operating rate at ambient temperature ≤ 55 °C	In operating cycles per hour			2400	2400	2400	2400	2400
Connection				Min/max c.s.a.				
Flexible cable without cable end	1 or 2 conductors		mm²	1/4	1/4	1/4	1/4	1/4
Flexible cable with cable end	1 conductor		mm²	1/4	1/4	1/4	1/4	1/4
	2 conductors		mm²	1/2.5	1/2.5	1/2.5	1/2.5	1/2.5
Solid cable without cable end	1 or 2 conductors		mm²	1/4	1/4	1/4	1/4	1/4
Tightening torque			N.m	1.2	1.2	1.2	1.2	1.2
Mechanical latching				Mechanical latch blocks LA6 DK must not be fitted on LC1 F contactors. For similar type of operation, use magnetic latching contactors CR1 F. See pages B9/30 to B9/35.				

(1) The closing time "C" is measured from the moment the coil supply is switched on to initial contact of the main poles. The opening time "O" is measured from the moment the coil supply is switched off to the moment the main poles separate.

(2) Control circuit characteristics with LX1 coil.

Selection: pages B10/50 to B10/73
References: pages B9/2 and B9/3
Dimensions: pages B9/54 to B9/56
Schemes: page B9/61

TeSys contactors

TeSys F contactors

Utilisation category AC-3 (115 to 1000 A), AC-1 (200 to 2600 A)

Control circuit: a.c. supply

LC1 F330	LC1 F400	LC1 F500	LC1 F630	LC1 F780	LC1 F800	LC1 F1000	LC1 F1250	LC1 F1400	LC1 F1700	LC1 F2100	LC1 F2600
24…1000	48…1000		48…1000	110…500	110…400	110...500 (2)	110...600	110...500 (2)	110…500 (2)	110…500 (2)	110…500 (2)
–											
–											
0.85…1.1 Uc	0.85…1.1 Uc		0.85…1.1 Uc	0.85…1.1 Uc	0.85…1.1 Uc	0.85…1.1 Uc	0.85…1.1 Uc	0.85…1.1 Uc	0.85…1.1 Uc	0.85…1.1 Uc	0.85…1.1 Uc
0.35…0.55 Uc	0.3…0.5 Uc		0.25…0.5 Uc	0.2…0.4 Uc	0.3…0.5 Uc	0.3…0.5 Uc	0.25...0.5 Uc	0.3…0.5 Uc	0.3…0.5 Uc	0.3…0.5 Uc	0.3…0.5 Uc
–	–	–	–	–	–	–	–	–	–	–	–
650	1075	1100	1650	2100	1700	2200	1650	2200	2200	2200	2500
0.9	0.9	0.9	0.9	0.9	0.9	0.9	0.9	0.9	0.9	0.9	0.9
–	–	–	–	–	–	–	–	–	–	–	–
10	15	18	22	50	12	36	22	36	36	36	45
0.9	0.9	0.9	0.9	0.9	–	0.9	0.9	0.9	0.9	0.9	0.9
–	–	–	–	–	–	–	–	–	–	–	–
650	1075	1100	1650	2100	1700	2200	1650	2200	2200	2200	2500
0.9	0.9	0.9	0.9	0.9	0.9	0.9	0.9	0.9	0.9	0.9	0.9
–	–	–	–	–	–	–	–	–	–	–	–
10	15	18	22	50	12	36	22	36	36	36	45
0.9	0.9	0.9	0.9	0.9	–	0.9	0.9	0.9	0.9	0.9	0.9
8	14	18	20	2 x 22	25	2 x 18	20	2 x 18	2 x 18	2 x 18	2 x 25
40…65	40…75	40…75	40…80	40…80	60…80	40…75	40…80	40…75	40…75	40…75	40…80
100…170	100…170	100…170	100…200	130…230	150…180	100...170	100...200	100...170	100…170	100…170	100…200
10	10	10	5	5	5	0.5	1	0.5	0.5	0.5	0.5
2400	2400	2400	1200	600	600	600	1200	600	600	600	600
Min/max c.s.a.											
1/4	1/4	1/4	1/4	1/4	1/4	1/4	1/4	1/4	1/4	1/4	1/4
1/4	1/4	1/4	1/4	1/4	1/4	1/4	1/4	1/4	1/4	1/4	1/4
1/2.5	1/2.5	1/2.5	1/2.5	1/2.5	1/2.5	1/2.5	1/2.5	1/2.5	1/2.5	1/2.5	1/2.5
1/4	1/4	1/4	1/4	1/4	1/4	1/4	1/4	1/4	1/4	1/4	1/4
1.2	1.2	1.2	1.2	1.2	1.2	1.2	1.2	1.2	1.2	1.2	1.2

Mechanical latch blocks LA6 DK must not be fitted on LC1 F contactors.
For similar type of operation, use magnetic latching contactors CR1 F.
See pages B9/30 to B9/35.

TeSys contactors
TeSys F contactors
Utilisation category AC-3 (115 to 1000 A), AC-1 (200 to 2600 A)
Control circuit: d.c. supply

Control circuit characteristics with LX4 coil

Contactor type				LC1 F115	LC1 F150	LC1 F185	LC1 F225	LC1 F265
Rated control circuit voltage (Uc) ⎓			V	24…460	24…460	24…460	24…460	24…460
Control voltage **limits** (θ ≤ 55 °C)	Operation			0.85…1.1 Uc	0.85…1.1 Uc	0.85…1.1 Uc	0.85…1.1 Uc	0.85…1.1 Uc
	Drop-out			0.15…0.2 Uc	0.15…0.2 Uc	0.15…0.2 Uc	0.15…0.2 Uc	0.15…0.2 Uc
Average consumption at 20 °C and at Uc	⎓	Inrush	W	560	560	800	800	750
		Sealed	W	4.5	4.5	5	*5*	5
Average operating time at Uc (1)	Closing "C"		ms	30…40	30…40	30…40	30…40	40…50
	Opening "O"		ms	30…50	30…50	30…50	30…50	40…65
				Note: the arcing time depends on the circuit switched by the poles. For all normal 3-phase applications, the arcing time is less than 10 ms. The load is isolated from the supply after a time equal to the sum of the opening time and the arcing time.				
Mechanical durability at Uc	In millions of operating cycles			10	10	10	10	10
Maximum operating rate at ambient temperature ≤ 55 °C	In operating cycles per hour			2400	2400	2400	2400	2400
Cabling				Min/max c.s.a.				
Flexible cable without cable end	1 conductor		mm²	1/4	1/4	1/4	1/4	1/4
	2 conductors		mm²	1/4	1/4	1/4	1/4	1/4
Flexible cable with cable end	1 conductor		mm²	1/4	1/4	1/4	1/4	1/4
	2 conductors		mm²	1/2.5	1/2.5	1/2.5	1/2.5	1/2.5
Solid cable without cable end	1 conductor		mm²	1/4	1/4	1/4	1/4	1/4
	2 conductors		mm²	1/4	1/4	1/4	1/4	1/4
Tightening torque			N.m	1.2	1.2	1.2	1.2	1.2
Mechanical latching				Mechanical latch blocks LA6 DK must not be fitted on LC1 F contactors. For similar type of operation, use magnetic latching contactors CR1 F. See pages B9/30 to B9/35.				

(1) The operating times depend on the type of contactor electromagnet and its control mode. The closing time "C" is measured from the moment the coil supply is switched on to initial contact of the main poles. The opening time "O" is measured from the moment the coil supply is switched off to the moment the main poles separate.

TeSys contactors

TeSys F contactors

Utilisation category AC-3 (115 to 1000 A), AC-1 (200 to 2600 A)

Control circuit: d.c. supply

LC1 F330	LC1 F400	LC1 F500	LC1 F630	LC1 F780	LC1 F800	LC1 F1000	LC1 F1250	LC1 F1400	LC1 F1700	LC1 F2100	LC1 F2600
24…460	48…440	48…440	48…440	110…440	110…400	110…440	48…250	110…440	110…440	110…440	110…440
0.85…1.1 Uc	0.85…1.1 Uc	0.85…1.1 Uc	0.85…1.1 Uc	0.85…1.1 Uc	0.85…1.1 Uc	0.85…1.1 Uc	0.85…1.1 Uc	0.85…1.1 Uc	0.85…1.1 Uc	0.85…1.1 Uc	0.85…1.1 Uc
0.15…0.2 Uc	0.2…0.35 Uc	0.2…0.35 Uc	0.2…0.35 Uc	0.2…0.4 Uc	0.3…0.5 Uc	0.2…0.35 Uc	0.2…0.35 Uc	0.2…0.35 Uc	0.2…0.35 Uc	0.2…0.35 Uc	0.2…0.35 Uc
750	1000	1100	1600	2 x 1000	1900	2100	1600	2100	2100	2100	2600
5	6	6	9	2 x 21	12	10	9	10	10	10	18
40…50	50…60	50…60	60…70	70…80	60…80	50…60	60…70	50…60	50…60	50…60	60…70
40…65	45…60	45…60	40…50	100…130	40…50	45…60	40…50	45…60	45…60	45…60	40…50

Note: *the arcing time depends on the circuit switched by the poles. For all normal 3-phase applications. the arcing time is less than 10 ms. The load is isolated from the supply after a time equal to the sum of the opening time and the arcing time.*

10	10	10	5	5	5	0.5	1	0.5	0.5	0.5	0.5
2400	2400	2400	1200	600	600	600	1200	600	600	600	600
Min/max c.s.a.											
1/4	1/4	1/4	1/4	1/4	1/4	1/4	1/4	1/4	1/4	1/4	1/4
1/4	1/4	1/4	1/4	1/4	1/4	1/4	1/4	1/4	1/4	1/4	1/4
1/4	1/4	1/4	1/4	1/4	1/4	1/4	1/4	1/4	1/4	1/4	1/4
1/2.5	1/2.5	1/2.5	1/2.5	1/2.5	1/2.5	1/2.5	1/2.5	1/2.5	1/2.5	1/2.5	1/2.5
1/4	1/4	1/4	1/4	1/4	1/4	1/4	1/4	1/4	1/4	1/4	1/4
1/4	1/4	1/4	1/4	1/4	1/4	1/4	1/4	1/4	1/4	1/4	1/4
1.2	1.2	1.2	1.2	1.2	1.2	1.2	1.2	1.2	1.2	1.2	1.2

Mechanical latch blocks LA6 DK must not be fitted on LC1 F contactors.
For similar type of operation, use magnetic latching contactors CR1 F.
See pages B9/30 to B9/35.

TeSys F

LC1 F115 to F330

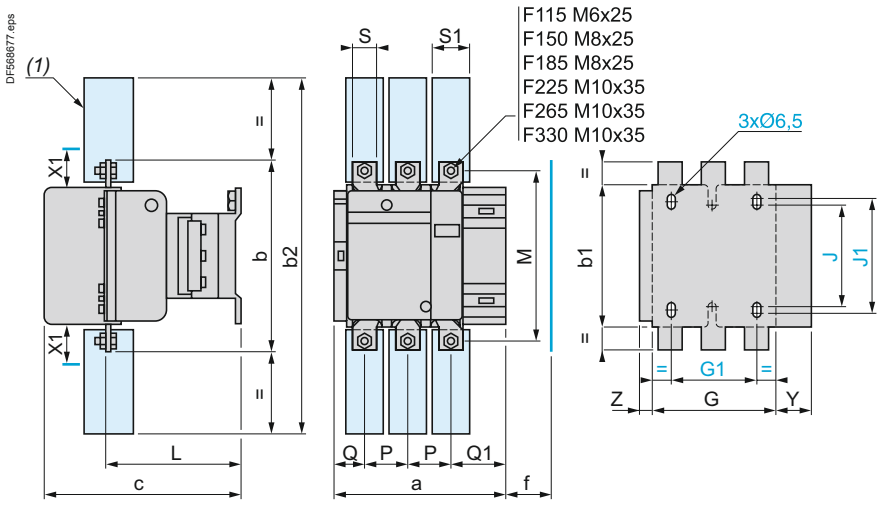

X1 (mm) = Minimum electrical clearance according to operating voltage and breaking capacity.

LC1	200...500 V	600...1000 V
F115, F150	10	15
F185	10	15
F225, F265	10	15
F330	10	15

(1) Power terminal protection shroud (see page B9/14).

LC1		a	b	b1	b2	c	f	G	G1	J	J1	L	M	P	Q	Q1	S	S1	Y	Z
F115	3P	163.5	162	137	265	171	131	106	80	106	120	107	147	37	29.5	60	20	26	44	13.5
	4P	200.5	162	137	265	171	131	143	80	106	120	107	147	37	29.5	60	20	26	44	13.5
F150	3P	163.5	170	137	301	171	131	106	80	106	120	107	150	40	26	57.5	20	34	44	13.5
	4P	200.5	170	137	301	171	131	143	80	106	120	107	150	40	26	55.5	20	34	44	13.5
F185	3P	168.5	174	137	305	181	130	111	80	106	120	113.5	154	40	29	59.5	20	34	44	13.5
	4P	208.5	174	137	305	181	130	151	80	106	120	113.5	154	40	29	59.5	20	34	44	13.5
F225	3P	168.5	197	137	364	181	130	111	80	106	120	113.5	172	48	21	51.5	25	44.5	44	13.5
	4P	208.5	197	137	364	181	130	151	80	106	120	113.5	172	48	17	47.5	25	44.5	44	13.5
F265	3P	201.5	203	145	375	213	147	142	96	106	120	141	178	48	39	66.5	25	44.5	38	21.5
	4P	244.5	203	145	375	213	147	190	96	106	120	141	178	48	34	66.5	25	44.5	38	21.5
F330	3P	213	206	145	375	219	147	154.5	96	106	120	145	181	48	43	74	25	44.5	38	20.5
	4P	261	206	145	375	219	147	202.5	96	106	120	145	181	48	43	74	25	44.5	38	20.5

f = minimum distance required for coil removal.

LC1 F400 and F500

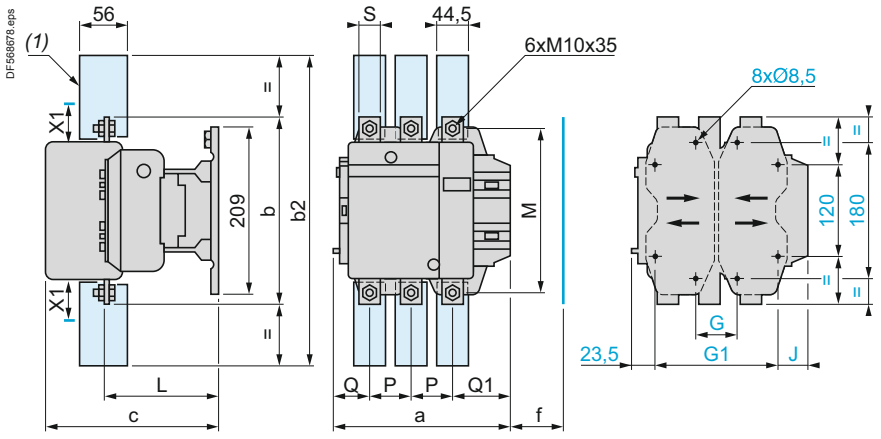

X1 (mm) = Minimum electrical clearance according to operating voltage and breaking capacity.

LC1	200...500 V	600...1000 V
F400	15	20
F500	15	20

(1) Power terminal protection shroud (see page B9/14).

LC1		a	b	b2	c	f	G supplied	G min.	G max.	G1 supplied	G1 min	G1 max.	J	L	M	P	Q	Q1	S
F400	2P	213	206	375	219	146	80	66	102	170	156	192	19.5	145	181	48	69	96	25
	3P	213	206	375	219	146	80	66	102	170	156	192	19.5	145	181	48	43	74	25
	4P	261	206	375	219	146	80	66	150	170	156	240	67.5	145	181	48	43	74	25
F500	2P	233	238	400	232	150	80	66	120	170	156	210	39.5	146	208	55	76	102	30
	3P	233	238	400	232	150	80	66	120	170	156	210	39.5	146	208	55	46	77	30
	4P	288	238	400	232	150	140	66	175	230	156	265	34.5	146	208	55	46	77	30

f = minimum distance required for coil removal.

Selection: pages B10/50 to B10/73
Characteristics: pages B9/46 to B9/53
References: pages B9/2 to B9/9
Schemes: page B9/61

TeSys contactors
TeSys F contactors

TeSys F

LC1 F630 and F800

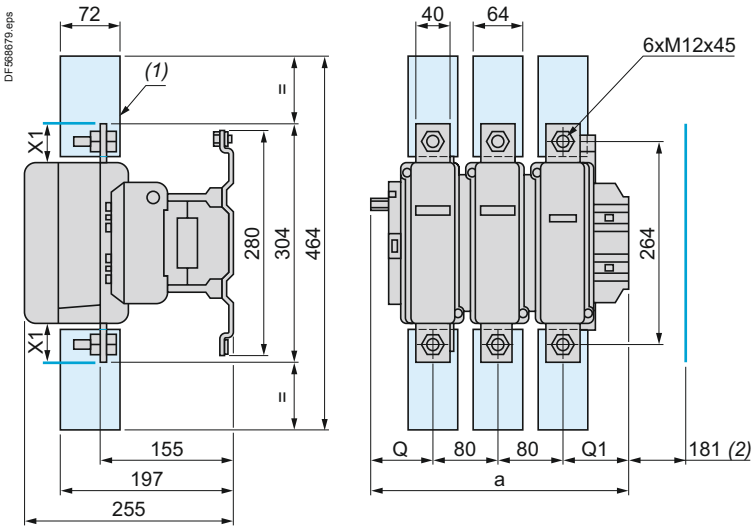

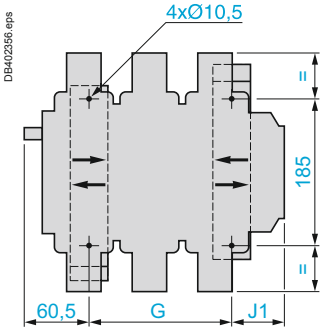

LC1		a	G supplied	G min.	G max.	J1	Q	Q1
F630	2P	309	180	100	195	68.5	102	127
F630, F800	3P	309	180	100	195	68.5	60	89
F630	4P	389	240	150	275	68.5	60	89

X1 (mm) = Minimum electrical clearance according to operating voltage and breaking capacity.

Voltage	200…500 V	690…1000 V	200…690 V	1000 V
LC1 F630	20	30	–	–
LC1 F800	–	–	10	20

(1) Power terminal protection shroud (see page B9/14).
(2) Minimum distance required for coil removal.

LC1 F780

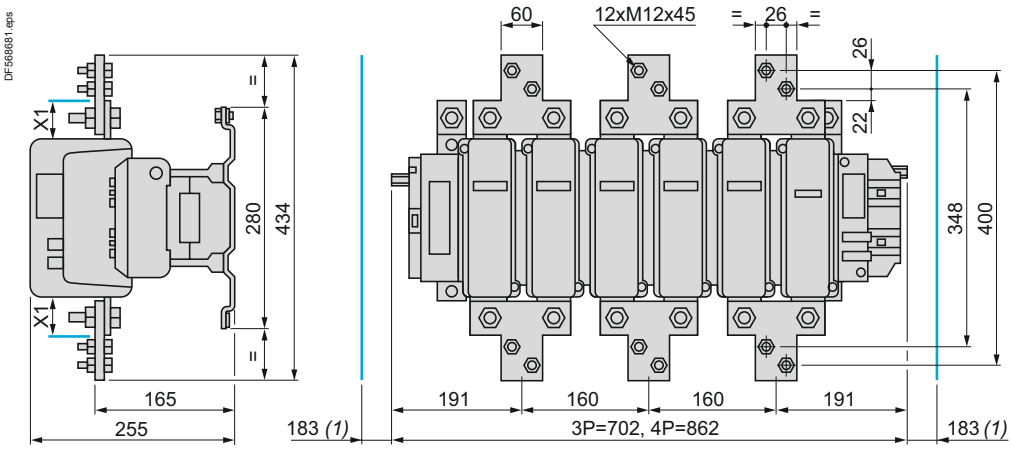

X1 (mm) = Minimum electrical clearance according to operating voltage and breaking capacity.

Voltage	200…500 V	690…1000 V
X1 (mm)	30	35

(1) Minimum distance required for coil removal.

Fixing centres of LC1 F7804

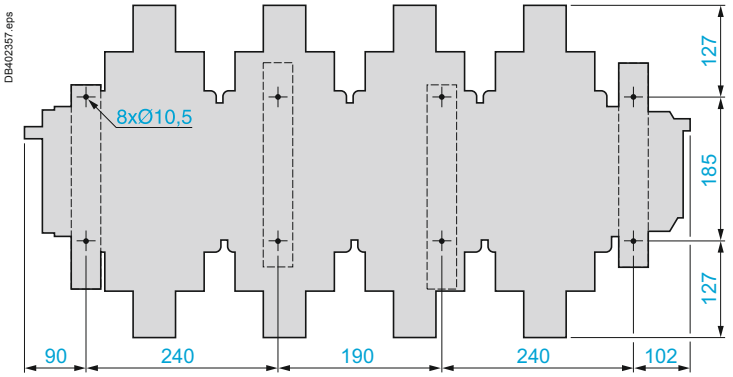

Fixing centres of LC1 F780

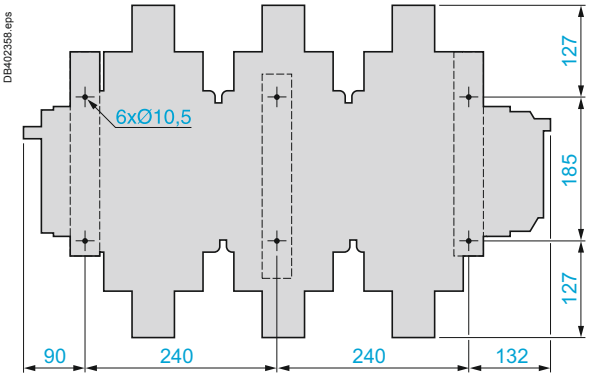

Selection: pages B10/50 to B10/73
Characteristics: pages B9/46 to B9/53
References: pages B9/2 to B9/9
Schemes: page B9/61

TeSys F

LC1 F1250

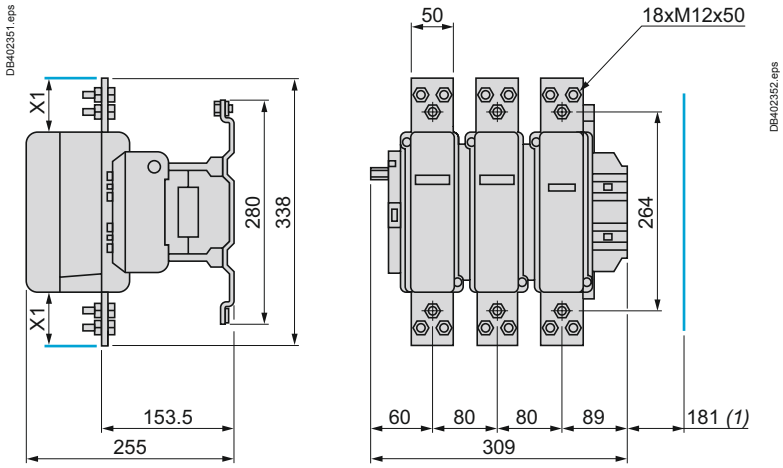

(1) Minimum distance required for coil removal.

X1 (mm) = Minimum electrical clearance according to operating voltage and breaking capacity.

Voltage	200…500 V	690…1000 V
X1 (mm)	20	30

LC1 F1000, LC1 F1400, LC1 F1700 and LC1 F2100

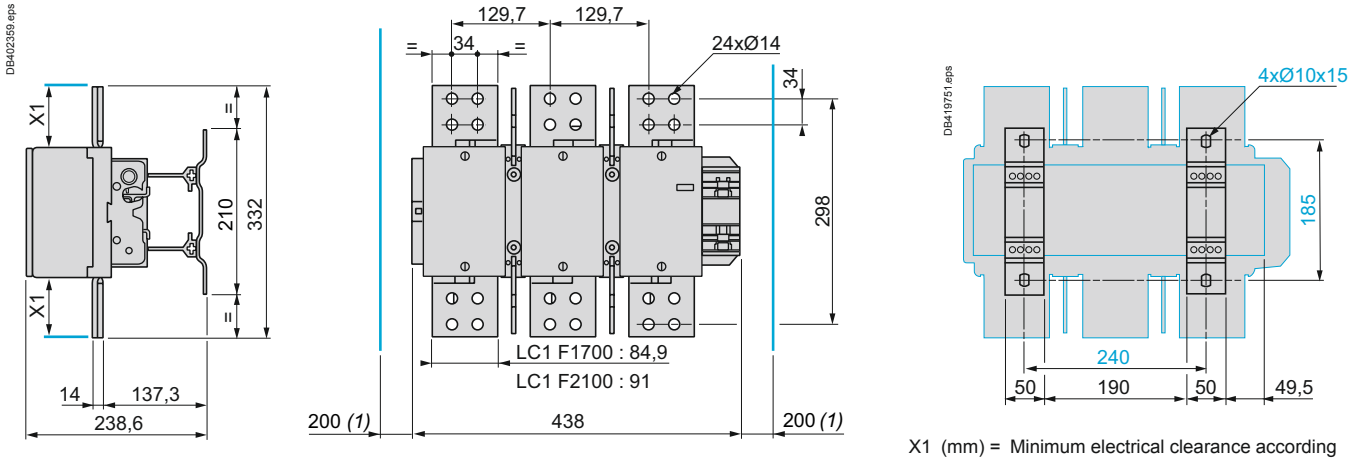

(1) Minimum distance required for coil removal.

X1 (mm) = Minimum electrical clearance according to operating voltage and breaking capacity.

Voltage	200…500 V	690…1000 V
X1 (mm)	90	100

LC1 F2600

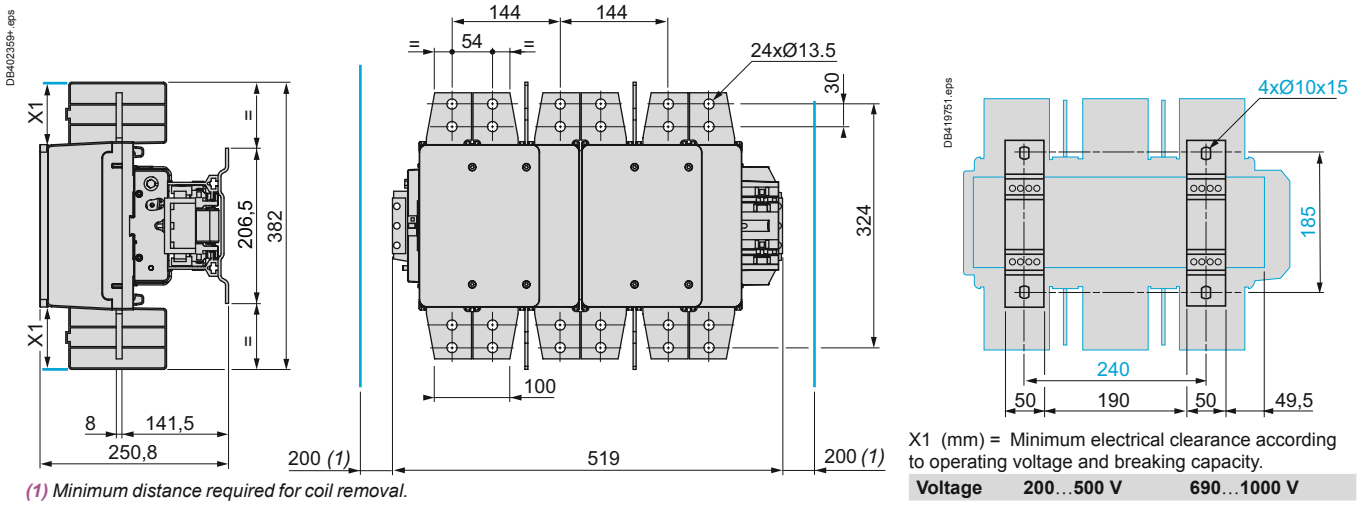

(1) Minimum distance required for coil removal.

X1 (mm) = Minimum electrical clearance according to operating voltage and breaking capacity.

Voltage	200…500 V	690…1000 V
X1 (mm)	90	100

Selection: pages B10/50 to B10/73
Characteristics: pages B9/46 to B9/53
References: pages B9/2 to B9/9
Schemes: page B9/61

Right-angled connectors LA9 F●981 (set of 3) for rear connection

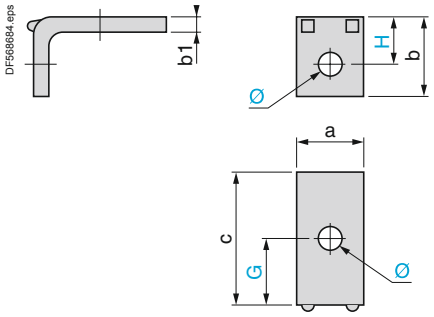

LA9	FF981	FG981	FJ981	FK981	FL981
a	15	20	25	30	40
b	18	23	29	35	48
b1	3	3	4	5	8
c	42	45	55	52	86
G	24	26	32.5	26	45
H	10.5	13	16.5	20	28
Ø	6.5	9	11	11	13

Right-angled connectors LA9 F●979 (set of 3) for side connection

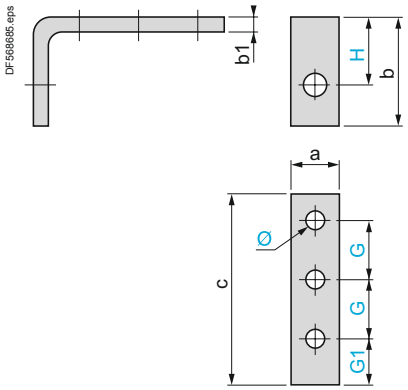

LA9	FF979	FG979	FJ979	FK979	FL979
a	15	20	25	30	40
b	54	58	63.5	68	117
b1	5	5	6	6	10
c	80	92	120	120	130
G	24	28	37	37	37.5
G1	20	22	29	29	35
H	36	39	41	42	76
Ø	6.5	9	11	11	13

Right-angled connectors LA9 F●980 with large surface area (set of 3)

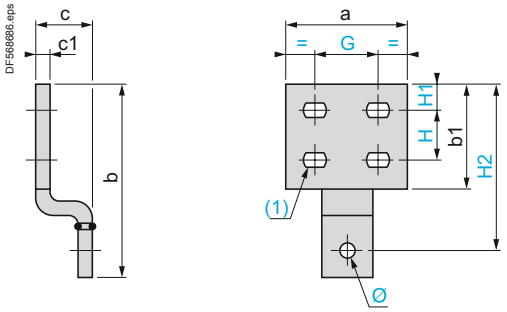

LA9	FF980	FG980	FJ980	FK980	FL980
a	35	40	50	60	100
b	70.5	82.5	98.5	114	154
b1	40	45	55	65	85
c	29	29	33	33	43
c1	3	3	5	5	10
G	18	20	25	29	53
H	18	20	22	26	40
H1	10	12	14	17	20
H2	60.5	72.5	84.5	97	132
Ø	6.5	9	11	11	13
(1)	Ø7 x 10	Ø9 x 12	Ø11 x 14	Ø12.5 x 15	Ø12.5 x 15

Right-angled connectors LA9 F1250 (set of 6)

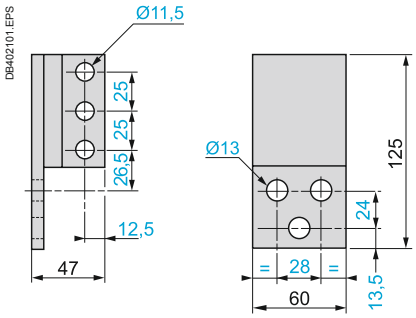

Right-angled connectors LA9 F2100 (set of 6) for rear connection

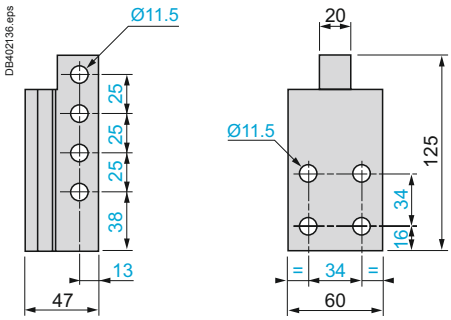

Right-angled connectors LA9 F2600 (set of 6) for rear connection

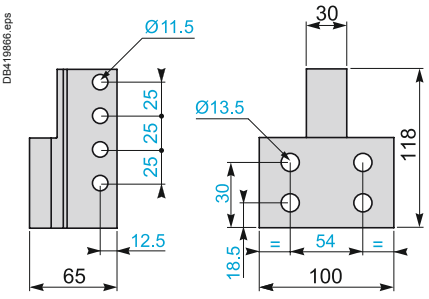

References:
page B9/13

Paralleling links (set of 4)

LA9 FF602, FG602, FH602

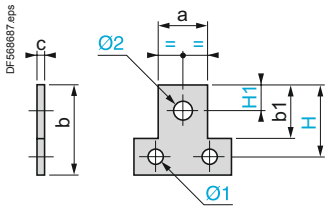

LA9 FK602, FL602

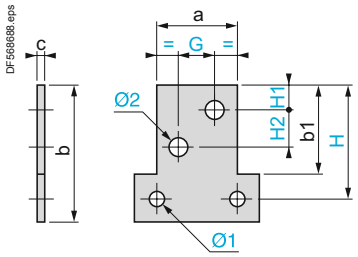

LA9	FF602	FG602	FH602	FK602	FL602
a	25	30	40	50	60
b	45	55	60	85	100
b1	30	35	40	55	65
c	4	5	8	10	10
G	–	–	–	22	26
H	37.5	45	52.5	70	85
H1	12.5	15	15	14	17
H2	–	–	–	22	26
Ø1	6.5	9	11	11	13
Ø2	11	11	13	11	14

Links for "star" connection of 3 poles

LA9 F●601

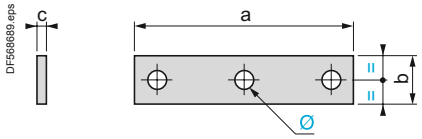

LA9	FF601	FG601	FH601	FK601	FL601
a	69	100	121	140	200
b	15	20	20	30	40
c	3	3	5	5	8
Ø	6.5 x 8.5	8.5 x 10.5	10.5 x 13	11	13

Capacitive delayed opening devices for TeSys F contactors

LAZ R9●●

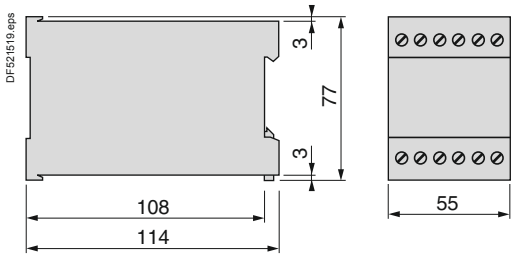

References:
page B9/13

TeSys contactors
TeSys F contactors
Accessories

TeSys F

LC1 F115 to F330

On panel

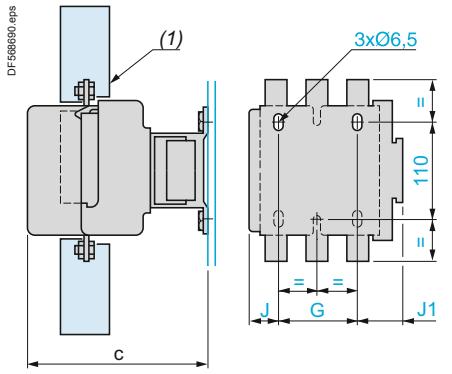

LC1		F115 F150	F185 F225	F265	F330
c (2)	3P	171	181	213	219
	4P	171	181	213	219
G	3P	80	80	96	96
	4P	80	80	96	96
J	3P	26.5	29	44.5	44.5
	4P	45	49	68.5	68.5
J1	3P	57	59.5	61.5	61.5
	4P	75.5	79.5	85.5	85.5

On pre-slotted mounting plate AM1 PA, PB, PC

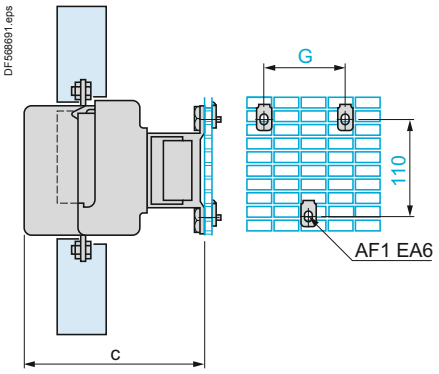

LC1		F115 F150	F185 F225	F265	F330
c (2)	3P	171	181	213	219
	4P	171	181	213	219
G	3P	80	80	96	96
	4P	80	80	96	96

On rails DZ5 MB on 120 mm centres

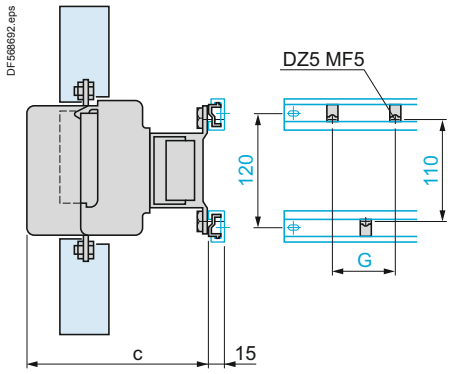

LC1		F115 F150	F185 F225	F265	F330
c (2)	3P	171	181	213	219
	4P	171	181	213	219
G	3P	80	80	96	96
	4P	80	80	96	96

LC1 F

On 2 notched rails AM1 EC●●●

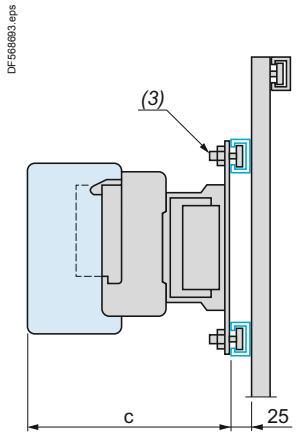

LC1 F115 to F330

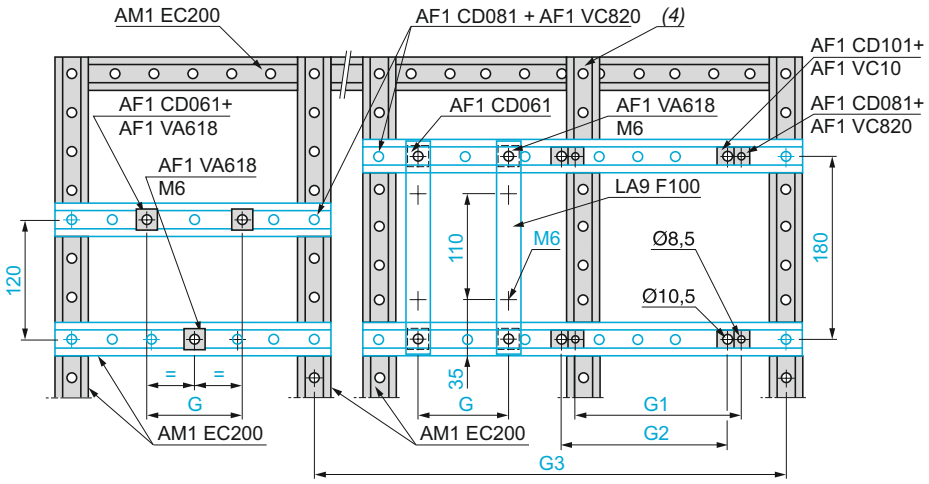

LC1 F400 to F800

LC1		F115, F150	F185, F225	F265	F330	F400	F500	F630	F780	F800
c	3P	165 (5)	176	207	213	219	232	255	255	255
	4P	165 (5)	176	207	213	219	232	255	255	–
G (M6)	3P	80	80	96	96	–	–	–	–	–
	4P	80	80	96	96	–	–	–	–	–
G1 (∅ 8.5)	3P	–	–	–	–	80	80	–	–	–
	4P	–	–	–	–	80	140	–	–	–
G2 (∅ 10.5)	3P	–	–	–	–	–	–	180	See page B9/55	180
	4P	–	–	–	–	–	–	240	See page B9/55	–

(1) Power terminal protection shroud (see page B9/14).
(2) See X1 (minimum electrical clearance) pages B9/54 and B9/55.
(3) AF1 CD●●● and AF1 VA●●●.
(4) This AM1 EC200 upright is required when G2 or G3 is greater than 700 mm (please consult your Regional Sales Office).
(5) + 6 mm with time-delay block on LC1 F.

Selection: pages B10/50 to B10/73
Characteristics: pages B9/46 to B9/53
References: pages B9/2 to B9/9
Schemes: page B9/61

TeSys contactors
TeSys F contactors

TeSys F

Contactors

2, 3 and 4-pole contactors

LC1 F115 to F630 , F1250
(coil LX1 F ∿)

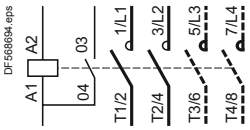

LC1 F115 to F630 , F1250 (coil LX4 F ⎓)
LC1 F115 to F265 (coil LX9 F ∿)
LC1 F800 (coil LX8 F ∿/ ⎓)

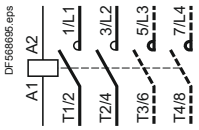

LC1 F780 ∿ or ⎓

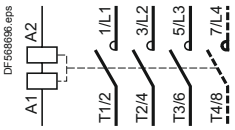

LC1 F1000
LC1 F1400 ∿ or ⎓
LC1 F1700 ∿ or ⎓
LC1 F2100 ∿ or ⎓
LC1 F2600 ∿ or ⎓

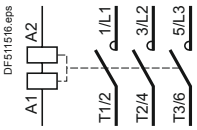

Coils

Standard ∿ coils

LX1 FF, FG, FJ…FL
LX1 FH0422…FH3802

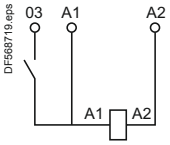

LX1 FH0202…FH0362
LX1 FH4402…FH10002
LX1 F8●

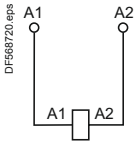

LX1 FX
Rectifier supplied and fixed on the contactor

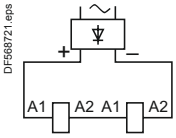

Standard ⎓ coils

LX4 FF, FG, FH, FJ, FK, FL, FX (1), LX4 F8●

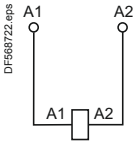

(1) 2 coils in series.

Special ∿ coils

LX9 FF, FG

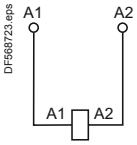

LX9 FH●●●2

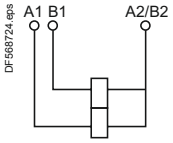

LX9 FJ, FK, FL

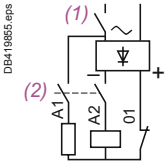

LX4 F8●

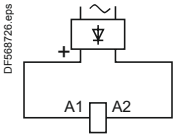

(1) Breaking on ∿ side.
Drop-out time 50 ms.
(2) Breaking on ⎓ side.
Drop-out time 20 ms.

TeSys contactors
TeSys F contactors

TeSys F

Add-on blocks

Instantaneous auxiliary contacts

1 N/O LAD N10 (1)

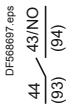

1 N/C LAD N01 (1)

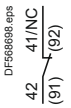

1 N/O + 1 N/C LAD N11

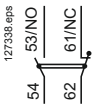

2 N/O LAD N20

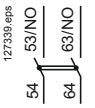

2 N/C LAD N02

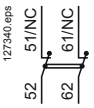

2 N/O + 2 N/C LAD N22

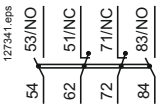

1 N/O + 3 N/C LAD N13

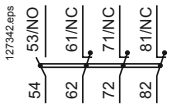

4 N/O LAD N40

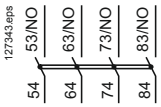

4 N/C LAD N04

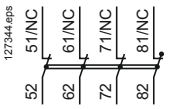

2 N/O + 2 N/C (2) **LAD C22**

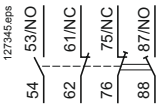

3 N/O + 1 N/C LAD N31

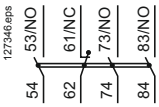

(1) Items in brackets: See "TeSys D contactors".

(2) 1 N/O + 1 N/C make before break.

Instantaneous auxiliary contacts with terminal referencing conforming to standard EN 50012 (References: pages B9/10 and B9/11)

1 N/O + 1 N/C LAD N11P

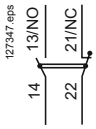

1 N/O + 1 N/C LAD N11G

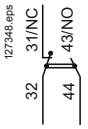

2 N/O + 2 N/C LAD N22P

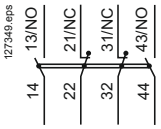

2 N/O + 2 N/C LAD N22G

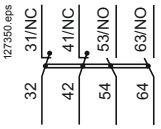

Dust and damp protected instantaneous auxiliary contacts

2 N/O (24-50 V) LA1 DX20

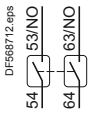

2 N/O (5-24 V) LA1 DY20

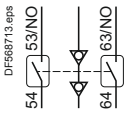

2 N/O protected (24-50 V) + 2 N/O standard LA1 DZ40

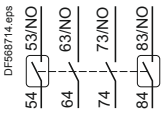

2 N/O protected (24-50 V) + 1 N/O + 1 N/C standard LA1 DZ31

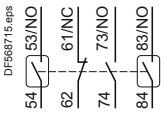

Time delay auxiliary contacts

On-delay 1 N/O +1 N/C LAD T●



Off-delay 1 N/O + 1 N/C LAD R●

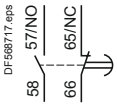

On-delay 1 N/C + 1 N/O break before make LAD S●

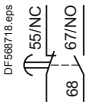

Capacitive delayed opening devices for TeSys F contactors

LAZ R9●● + LC1 F

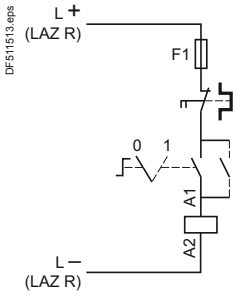

High power contactors

TeSys contactors

TeSys V 3-pole vacuum contactors and reversing contactors

Selection

Contactor size			LC1 V160	LC1 V320	LC1 V610
For utilisation category AC-3					
Maximum operational current in AC-3		**A**	160	320	610
Rated operational power P (standard power ratings of motors)	230 V	**kW**	45	90	160
	400 V	**kW**	75	160	300
	525 V	**kW**	110	220	400
	690 V	**kW**	150	280	560
	1000 V	**kW**	200	400	800
	1500 V	**kW**	280	600	930
For 3-phase motors conforming to CSA standards					
Rated operational power P (standard power ratings of 3-phase CSA motors)	200 V	**hp**	50	100	150
	240 V	**hp**	60	125	200
	380 V	**hp**	100	200	300
	480 V	**hp**	125	250	400
	600 V	**hp**	150	300	500
	800 V	**hp**	200	400	700
	1000 V	**hp**	250	500	1000
	1500 V	**hp**	400	800	1300
For switching 3-phase capacitors					
Rated operational power P	240 V	**kVAR**	47	94	176
	480 V	**kVAR**	95	190	356
	600 V	**kVAR**	100	200	400
	1500 V	**kVAR**	250	500	1000
For switching the primaries of 3-phase transformers (LV/LV)					
Rated operational power P	208 V	**kVA**	20	41	81
	240 V	**kVA**	23	47	94
	480 V	**kVA**	47	94	188
	600 V	**kVA**	59	117	234

Environment characteristics

Contactor type				LC1 V160	LC1 V320	LC1 V610
Shock resistance (1/2 sine wave = 11 ms)		Contacts closed		10 gn	10 gn	10 gn
		Contacts open		10 gn	10 gn	10 gn
Vibration resistance		10…500 Hz		2 gn	2 gn	2 gn
Operating altitude	Above sea level	Maximum	**m**	3600	3600	3600
	Below sea level	Minimum	**m**	2500	4500	4500
Ambient air temperature around the device		Storage	**°C**	-40…+80	-40…+80	-40…+80
		Operation 0.8… 1.1 Uc	**°C**	-5…+55	-5…+55	-5…+55
		Permissible for operation at Uc	**°C**	-10…+75	-10…+75	-10…+75
Degree of protection		Conforming to IEC 60529		IP 00	IP 00	IP 00
Operating position				Any	Any	Any
Cabling		Cable c.s.a.	**mm²**	70	185	2 x 185
		Key for hex. screws	**mm**	Allen 4	20	20
		Tightening torque	**N.m**	14	39	39

Control circuit characteristics

Rated insulation voltage (Ui)	To earth	**V**	2000	2000	2000
Consumption	Inrush	**VA**	300	600	1700
	Sealed	**VA**	30	20	28
Permissible control circuit voltage			0.8…1.1 Uc	0.8…1.1 Uc	0.8…1.1 Uc
Closing time (1)		**ms**	18...22	24...32	24...32
Opening time (1)		**ms**	95...115	95...115	95...115

(1) The closing time "C" is measured from the moment the coil supply is switched on to initial contact of the main poles. The opening time "O" is measured from the moment the coil supply is switched off to the moment the main poles separate.

References:
page B9/4

Dimensions:
page B9/64

Schemes:
page B9/64

TeSys contactors

TeSys V 3-pole vacuum contactors and reversing contactors

TeSys V

Main pole characteristics

Contactor type			LC1 V160	LC1 V320	LC1 V610
Rated insulation voltage (Ui)		**V**	1500	1500	1500
Rated impulse withstand voltage (Uimp)		**kV**	8	8	8
Conforming to standards			EN 60947-4-1 - IEC 60947-4-1		
Approvals			CSA		
Conventional rated thermal current (Ith)		**A**	160	320	630
Rated operational current (Ie)	θ ≤ 40 °C AC-1	**A**	160	320	630
	θ ≤ 55 °C AC-3	**A**	160	320	610
	θ ≤ 55 °C AC-4	**A**	130	270	540
Electrical durability in millions of operating cycles (400 V at I max)	AC-1		1.2	1	1
	AC-3		1.6	1.5	1.5
	AC-4		0.18	0.15	0.12
Mechanical durability	In millions of operating cycles		5	2.5	2
Maximum operating rate in operating cycles per hour	Mechanical		1200	1200	1200
	AC-1		900	900	900
	AC-3		900	900	900
	AC-4		450	450	450
Maximum making capacity (Irms)	Ue = 1500 V To IEC 60947	**A**	1900	3800	7300
Maximum breaking capacity (Irms)	Ue = 1500 V To IEC 60947	**A**	1600	3200	6100
Maximum permissible current	For 1 s	**A**	2400	4500	9000
	For 2 s	**A**	2000	3750	7580
	For 10 s	**A**	1600	3200	6100
	For 30 s	**A**	960	1920	3600
Short-circuit protection at Ie in cat. AC-3 max.	aM fuse	**A**	160	400	630

Auxiliary contact characteristics

Rated insulation voltage (Ui)		**V**	690
Conventional rated thermal current (Ith)		**A**	10
Rated operational current (Ie)	AC-15, 230 V	**A**	0.78
	AC-15, 400 V	**A**	0.45
	AC-15, 500 V	**A**	0.35
	DC-13, 24 V	**A**	1.1
	DC-13, 110 V	**A**	0.24
	DC-13, 220 V	**A**	0.12
Cabling	Cable c.s.a.	**mm²**	2.5
Short-circuit protection	gG fuse	**A**	10
Operating time (1) (at 100 % of Uc)	"C"	**ms**	±5
	"O"	**ms**	±5

(1) Operating time in relation to the main contacts.

TeSys contactors

TeSys V 3-pole vacuum contactors

Dimensions, mounting

LC1 V160

500311.eps

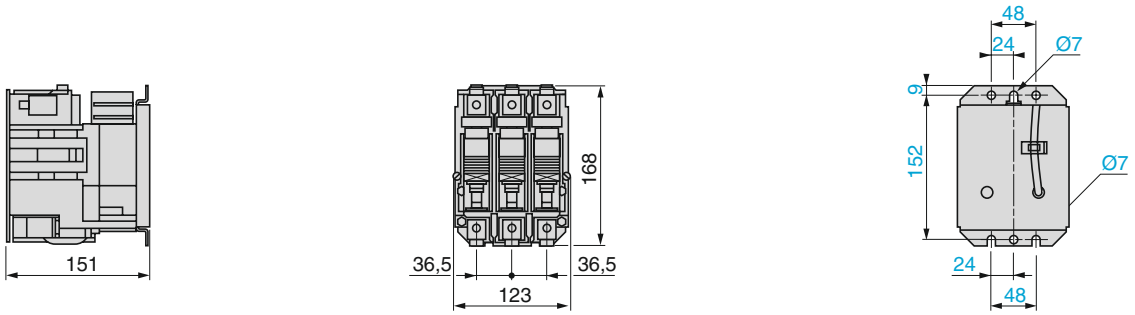

LC1 V320

500312.eps

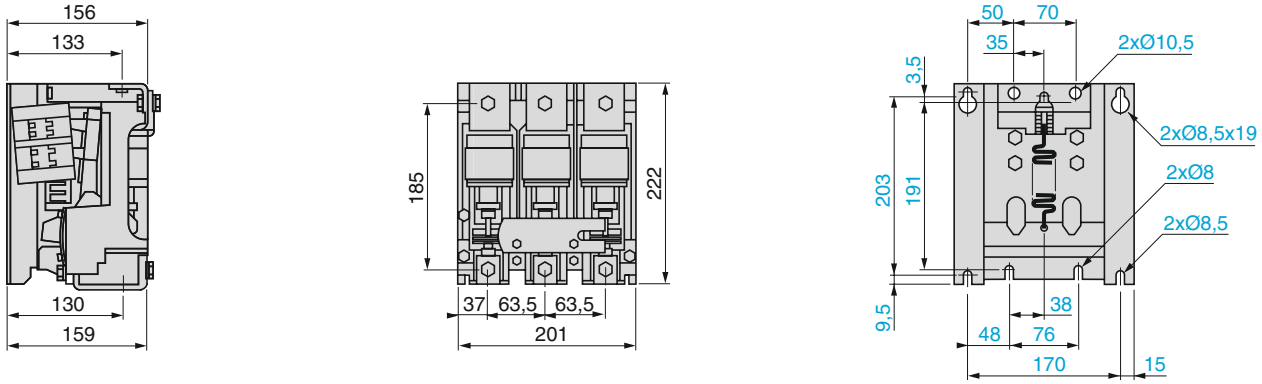

LC1 V610

500313.eps

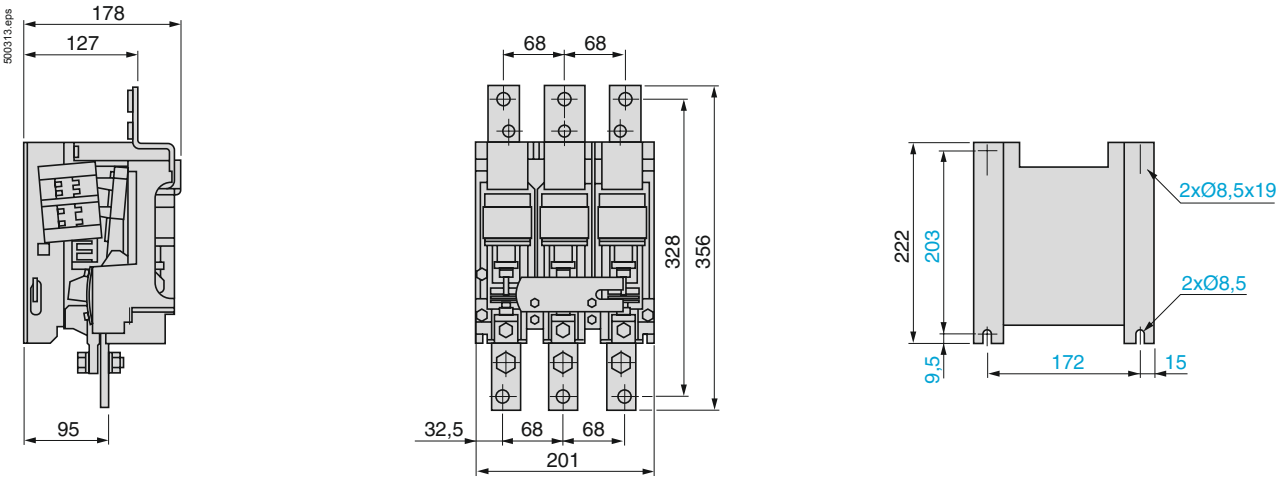

Schemes

LC1 V160

500314.eps

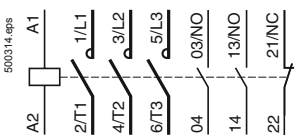

LC1 V320, V610

500315.eps

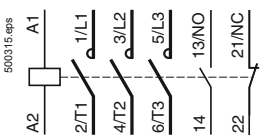

Auxiliary contact blocks

LA1 VN11 1 N/O & 1 N/C

500316.eps

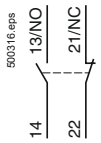

LA1 VN02 2 N/C

500317.eps

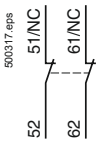

LA1 VN20 2 N/O

500318.eps

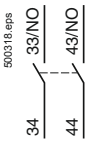

LA1 VN11X 1 N/O

500521.eps

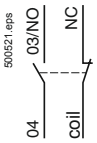

Schneider Electric

TeSys reversing contactors

TeSys V 3-pole reversing vacuum contactors

Dimensions, mounting

LA9 V974 + 2 x LC1V160

562320.eps

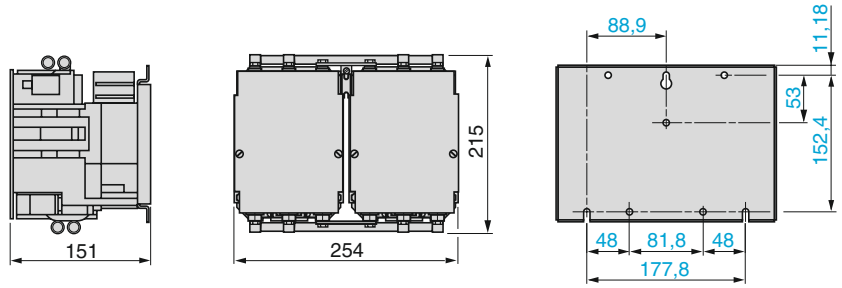

LC2 V320

DF536047.eps

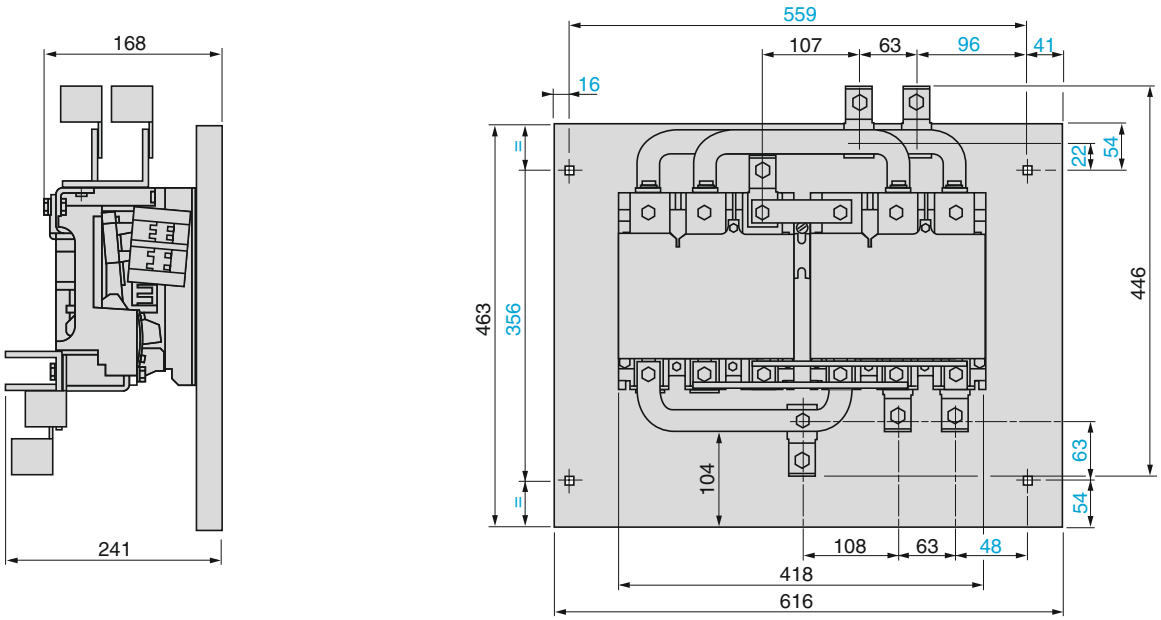

LC2 V610

562322.eps

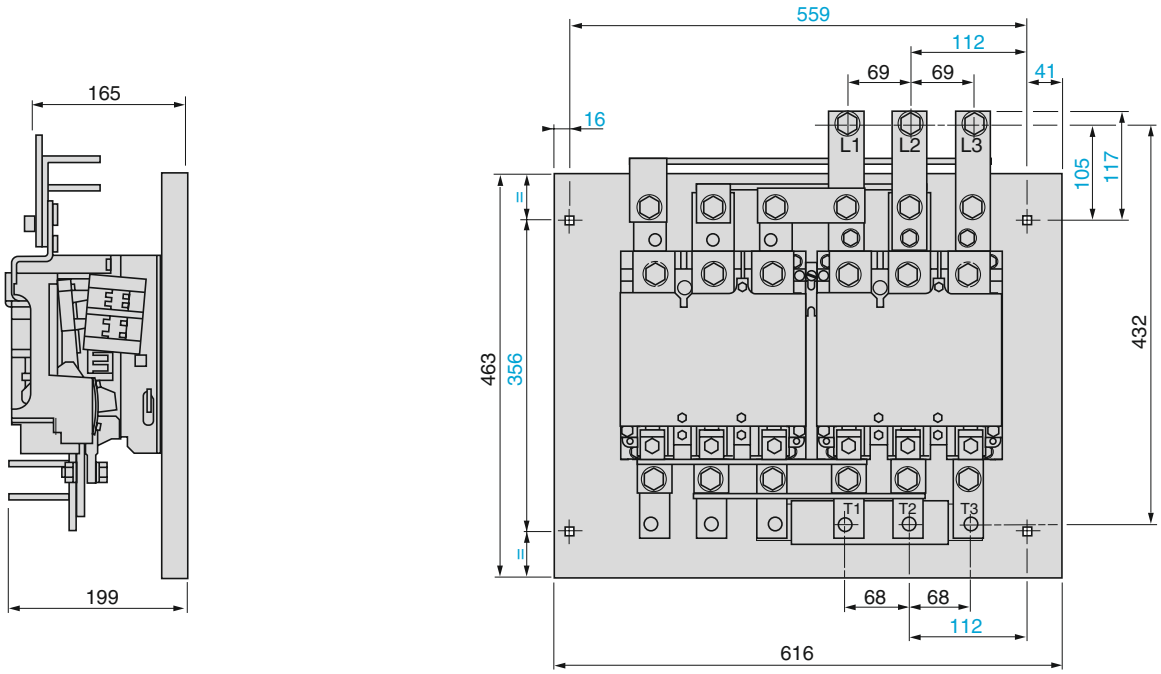

High power contactors

TeSys reversing contactors

TeSys V 3-pole reversing vacuum contactors

Schemes

LA9 V974 + 2 x LC1V160

562323.eps

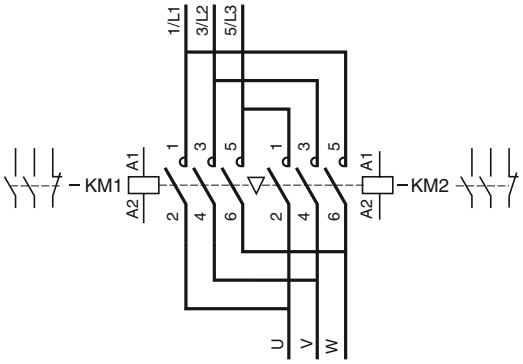

LC2 V320

562324.eps

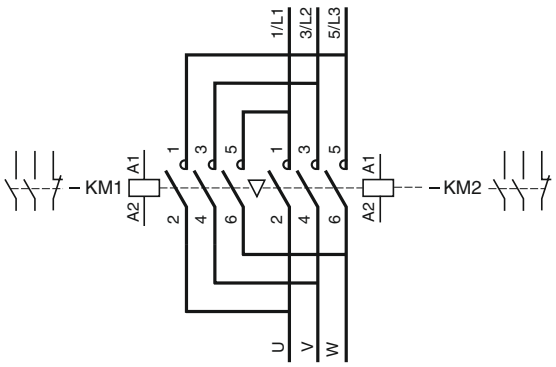

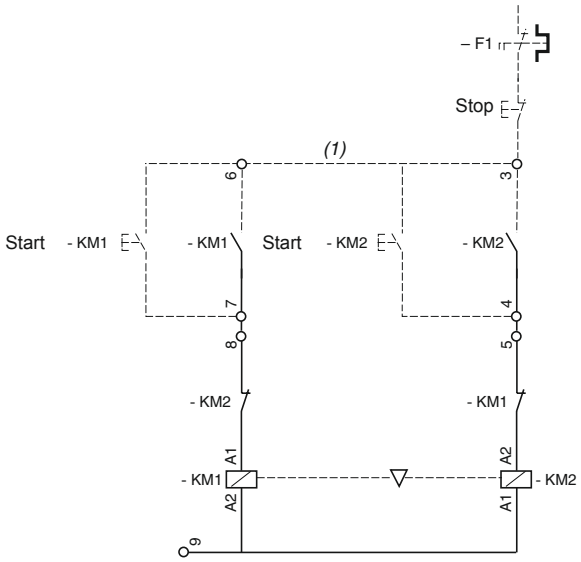

(1) Dotted line indicates wiring to be installed by the customer.

Selection: page B9/62
Characteristics: pages B9/62 and B9/63
References: page B9/4

TeSys reversing contactors

TeSys V 3-pole reversing vacuum contactors

Schemes

LC2 V610

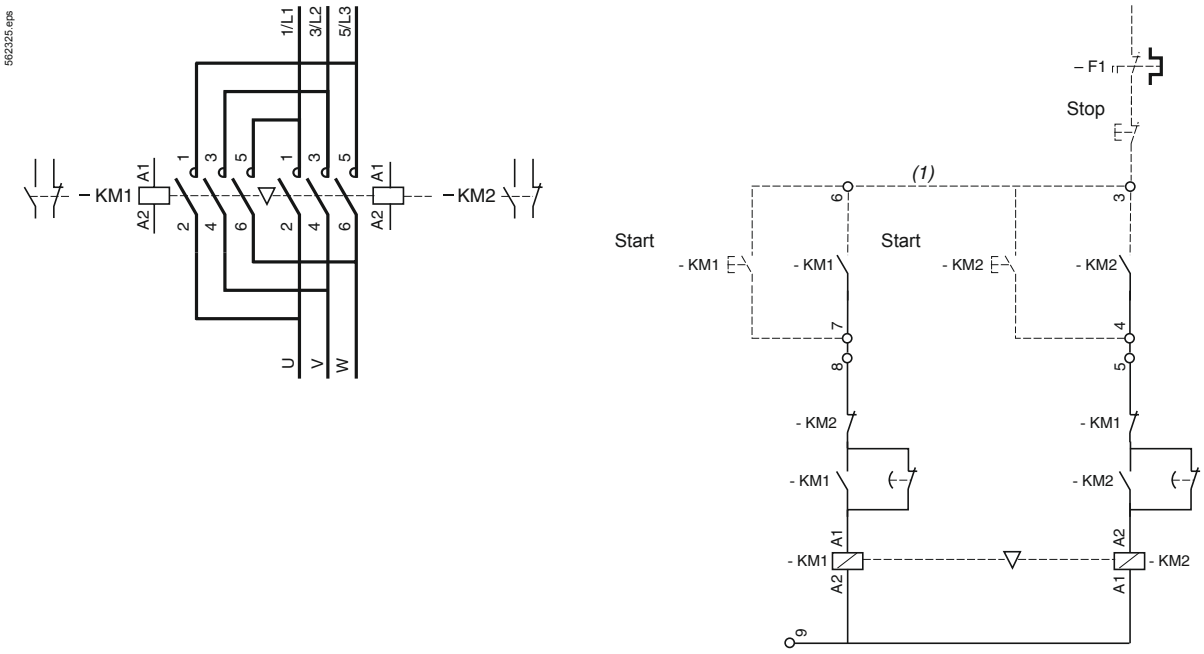

(1) Dotted line indicates wiring to be installed by the customer.

High power contactors

TeSys contactors
TeSys LC1 FG 3-pole shockproof contactors

TeSys FG

PF537334

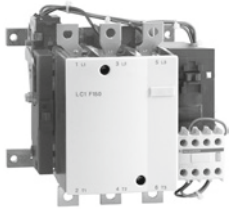

LC1 FG150

Presentation

In an environment subject to severe mechanical shocks, unwanted closing of a contactor's poles and the serious consequences of this, is not permissible.

Shockproof contactors **LC1 FG150** to **FG630** are equipped with an auxiliary electromechanical device which ensures that the contactor is mechanically locked in the “open” position when it’s main electromagnet is not energised.

If the contactor is subjected to mechanical impact, from back to front or from front to back, accidental closing of the poles is then impossible.

In addition, accidental opening of the poles (when the contactor is in the “on” position), is virtually impossible due to the significant pull-in force characteristic of these contactors.

PF537336



LC1 FG265

Applications

- **Marine:** on-board equipment, windlasses, capstans, winches, etc…
- **Military equipment :** land, sea, launching silos.
- **Heavy mechanical handling systems:** travelling cranes, cranes, gantries.
- **Conveying and handling:** lifts, hoists, conveyors.
- **Equipment for power stations.**
- **Distribution boards.**

TeSys contactors
TeSys LC1 FG 3-pole shockproof contactors

TeSys FG

Description of shockproof device

Shockproof contactors **LC1 FG●●●** are equipped with:
- a lever **1** that is rotated by the core of the contactor's electromagnet.
- an auxiliary electromagnet (EV) for the locking function.
- an RC circuit (Resistor-Capacitor) to limit overvoltage.

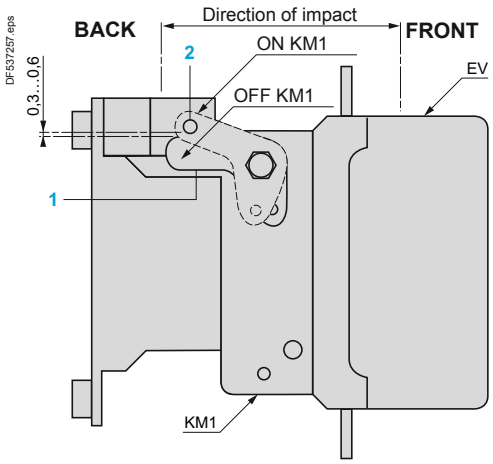

Operation

- In the 'off' position (contactor open and not energised) the core **2** of the electromagnet (EV) locks the lever **1** and therefore the contactor.
- The coils (KM1) and (EV) are energised simultaneously, the core **2** releases the lever **1** and allows the contactor to close.
- De-energisation of the locking electromagnet (EV) is achieved by an auxiliary contact within the contactor.

The core **2** rests freely in lever **1**.
- On de-energisation of coil KM1, the moving contact drops out.

Core **2**, under spring pressure, once again locks lever **1**.

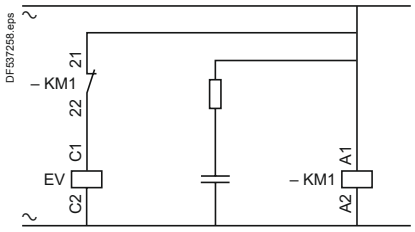

High power contactors

TeSys contactors

TeSys LC1 FG 3-pole shockproof contactors a.c. supply

According to the utilisation category AC-3 and required electrical durability

Use in category AC-3 (Ue ≤ 440 V)

Operational current and power (θ ≤ 55 °C)

Contactors			LC1 FG150	LC1 FG185	LC1 FG265	LC1 FG400	LC1 FG500	LC1 FG630
Operational current		A	150	185	265	400	500	630
Operational power Standard power ratings of motors)	220/230 V	kW	40	55	75	110	147	200
		hp	*54*	*75*	*100*	*150*	*200*	*270*
	380/400 V	kW	75	90	132	200	250	335
		hp	*100*	*185*	*180*	*270*	*340*	*450*
	415 V	kW	80	100	140	220	280	375
		hp	*110*	*136*	*180*	*300*	*380*	*500*
	440 V	kW	80	100	140	250	295	400
		hp	*110*	*136*	*190*	*340*	*400*	*545*
	500 V	kW	90	110	160	257	355	400
		hp	*125*	*150*	*220*	*350*	*480*	*545*
	660/690 V	kW	100	110	160	280	335	450
		hp	*136*	*150*	*220*	*380*	*450*	*600*
	1000 V	kW	65	100	147	185	335	450
		hp	*85*	*136*	*200*	*250*	*450*	*610*

Maximum operating rate (operating cycles/hour) (1)

On-load factor	Operational power	LC1 FG150	LC1 FG185	LC1 FG265	LC1 FG400	LC1 FG500	LC1 FG630
≤ 85 %	P	750	750	750	500	500	500
≤ 85 %	0.5 P	2000	2000	2000	1200	1200	1200
≤ 25 %	P	1200	1200	1200	1200	1200	1200

(1) Depending on the operational power and the on-load factor (θ ≤ 55 °C).

Electrical durability in utilisation category AC-3 (Ue ≤ 440 V)

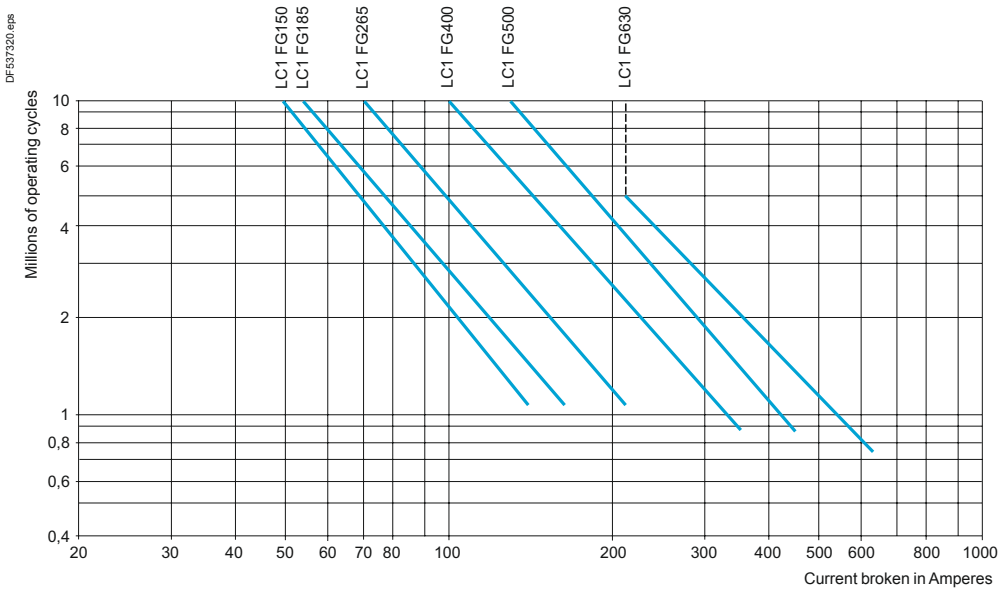

Control of 3-phase asynchronous squirrel cage motors with breaking whilst running.
The current broken (Ie) in category AC-3 is equal to the rated operational current of the motor.
Example:
Asynchronous motor with P = 55 kW - Ue = 380 V - Ie = 105 A
4 million operating cycles required.
The above selection curves show the contactor rating needed: **LC1 FG265**.

Presentation: pages B9/68 and B9/69
Characteristics: pages B9/76 to B9/83
References: page B9/6
Dimensions, schemes: pages B9/84 and B9/85

TeSys contactors

TeSys LC1 FG 3-pole shockproof contactors a.c. supply

According to the utilisation category AC-1 and required electrical durability

Use in category AC-1 (Ue ≤ 440 V)

Contactors				LC1 FG150	LC1 FG185	LC1 FG265	LC1 FG400	LC1 FG500	LC1 FG630
Connection	Cable	C.s.a.	mm²	120	150	240	–	–	–
	Bar	Number		–	–	–	2	2	2
		C.s.a.	mm	–	–	–	30 x 5	40 x 5	60 x 5
Maximum operating rate in operating cycles/hour				600	600	600	600	600	600
Operational current AC-1		≤ 40 °C	A	250	270	350	500	700	1000
		≤ 55 °C	A	220	240	300	430	580	850
		≤ 70 °C (1)	A	170	180	250	340	500	700

(1) Only for operation with coil supplied at Uc.

Increase in operational current by parallel connection of poles

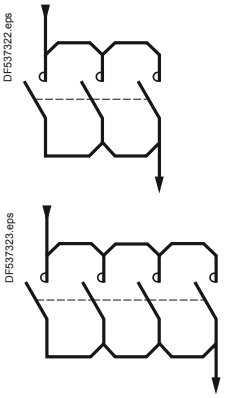

Apply the following multiplying factors to the current values given above.
The factors take into account the often unbalanced current distribution between the 2 poles:
- 2 poles in parallel: K = 1.6
- 3 poles in parallel: K = 2.25
- 4 poles in parallel: K = 2.8.

Recommended connection scheme to equalise the currents in each pole (see opposite).

Electrical durability in utilisation category AC-1 (Ue ≤ 440 V)

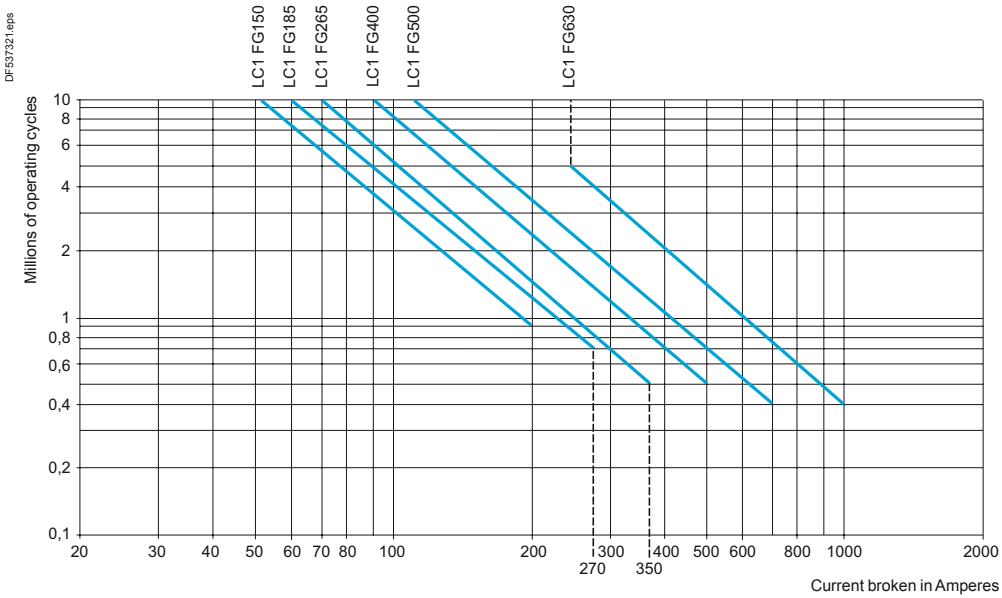

Example:
Control of resistive circuits (cos φ ≥ 0.95).
The current broken (Ic) in category AC-1 is equal to the current (Ie) normally drawn by the load.
Ue = 220 V - Ic = Ie = 300 A - θ = 40 °C.
1 million operating cycles required.
The above selection curves show the contactor rating needed: **LC1 FG400**.

High power contactors

TeSys contactors

TeSys LC1 FG 3-pole shockproof contactors a.c. supply

According to the utilisation category AC-2/AC-4 and required electrical durability

Thermal limits in utilisation categories AC-2/AC-4

Contactors		LC1 FG150	LC1 FG185	LC1 FG265	LC1 FG400	LC1 FG500	LC1 FG630
Thermal limit zone	**Operating cycles/hour (1) and on-load factor**	**Maximum current broken according to the duty requirements** (thermal limit, ambient temperature ⩽ 55 °C)					
A	From 150 and 15 % to 300 and 10 %	310	380	560	780	1100	1400
B	From 150 and 20 % to 600 and 10 %	280	350	500	700	950	1250
C	From 150 and 30 % to 1200 and 10 %	240	300	400	600	750	950
D	From 150 and 55 % to 2400 and 10 %	190	240	320	450	600	720
E	From 150 and 85 % to 3600 and 10 %	145	170	230	350	500	660

(1) Do not exceed the maximum limit for the mechanical operating cycles.

Counter current braking (plugging)

The current varies from the maximum plug-braking current to the rated motor current.
The current made must be compatible with the making and breaking capacities of the contactor.

In most cases, breaking occurs at a current value close to the locked rotor current and contactor selection can therefore be made using the criteria for utilisation categories AC-2 and AC-4.

Electrical durability in utilisation categories AC-2/AC-4 (Ue ⩽ 440 V)

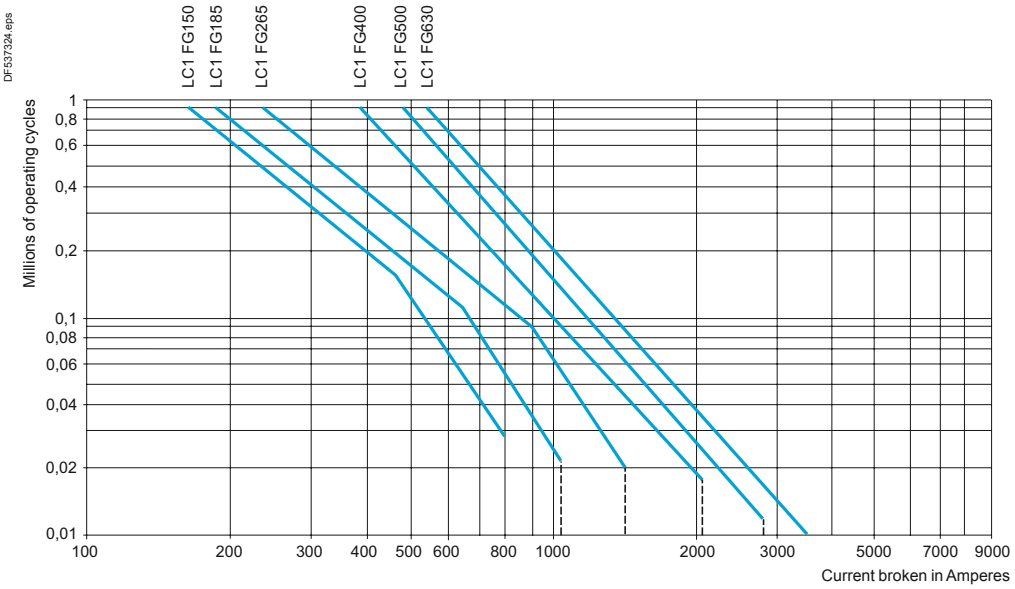

Example: Contactor selection

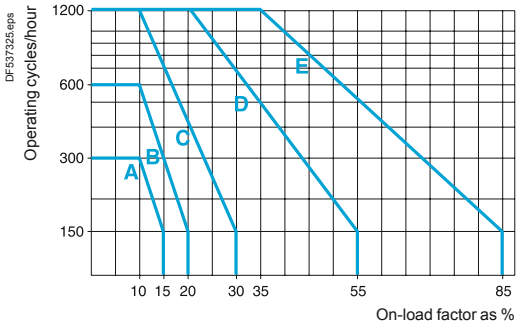

For an on-load factor of 10 % at 400 operating cycles per hour, the curve on the left indicates zone B. If the current broken is 600 A, the above table leads to selection of an **LC1 FG400** contactor. Referring to the electrical durability curves, it can be seen that the contactor will be able to perform 350 000 operating cycles. Where a higher value of electrical durability is required, 1 million operating cycles for example, an **LC1 FG630** contactor would be recommended.

Presentation: pages B9/68 and B9/69
Characteristics: pages B9/76 to B9/83
References: page B9/6
Dimensions, schemes: pages B9/84 and B9/85

TeSys contactors
For switching 3-phase capacitor banks, used for power factor correction
Switching the primaries of 3-phase transformers (LV/LV)

Switching 3-phase capacitors

Capacitors, together with the circuits to which they are connected, form oscillatory circuits which can, at the moment of switch-on, give rise to high transient currents (> 180 In) at high frequencies (1 to 15 kHz).
The contactors are used for direct switching. The values of peak current at switch-on must not exceed the values indicated below.

An inductor or an early break resistor may be inserted in each of the three phases supplying the capacitors to reduce the peak current, if necessary. This must be done when switching multiple step capacitor banks.
Inductance values are determined according to the selected operating temperature: please refer to our “Motor starter solutions - Control and protection components” catalogue.

In addition, in accordance with standards IEC 60070, NF C 54 100, VDE 0560, the switching contactor must be able to withstand a continuous current of 1.43 times the rated current of the capacitor bank step being switched. The rated operational powers given in table the below take this overload into account.

Short-circuit protection is normally provided by g1 fuses rated at 1.3 to 1.6 In.

Maximum operational power of contactors

Maximum operating rate: 120 operating cycles/hour.
Electrical durability at maximum load: 100 000 operations.
With choke inductors connected, where necessary.

Operational power at 50/60 Hz						Maximum peak current	Contactor to be used
θ ≤ 40 °C			θ ≤ 55 °C				
220 V 240 V	400 V 440 V	600 V 660 V	220 V 240 V	400 V 440 V	600 V 660 V		
kvar	kvar	kvar	kvar	kvar	kvar	A	
60	100	135	40	85	90	3200	**LC1FG150**
70	125	160	50	100	100	3500	**LC1FG185**
90	160	225	75	125	125	5000	**LC1FG265**
125	220	300	100	160	200	8000	**LC1FG400**
180	300	400	125	220	300	10 000	**LC1FG500**
250	400	600	190	350	500	12 000	**LC1FG630**

Switching the primaries of 3-phase transformers (LV/LV)

When a transformer is switched on, there is generally an initial current surge which can reach 20 to 40 times the rated current for the power ratings shown below.
This current reaches its peak value almost instantaneously and then decreases in a largely exponential manner, quickly dropping back down to its steady state value.

Contactor selection

Operating rate less than 120 operating cycles/hour.
Maximum operational voltages: 1000 V 50/60 Hz.
The value of the peak magnetising current must be lower than the values indicated below.
Maximum ambient temperature: 55 °C.

Contactor			LC1 FG150	LC1 FG185	LC1 FG265	LC1 FG400	LC1 FG500	LC1 FG630
Maximum permissible current peak at switch-on		**A**	1700	2800	3500	5500	6800	9000
Maximum operational power (1)	220 V	**kVA**	25	40	50	75	100	140
	380 V	**kVA**	50	75	90	130	170	225
	415/440 V	**kVA**	55	80	100	140	190	250
	500 V	**kVA**	65	95	110	170	225	280
	660 V	**kVA**	80	120	140	200	270	315
	1000 V	**kVA**	100	150	200	250	375	470

(1) Maximum operational power corresponding to a current peak at switch-on of 30 In.

High power contactors

TeSys contactors

TeSys LC1 FG 3-pole shockproof contactors d.c. supply

Selection guide for utilisation categories DC-1 to DC-5

Use in category DC-1 (resistive loads; time constant L/R ⩽ 1 ms)

Rated operational current Ie

Operational voltage (Ue)	Number of poles to be wired in series	Contactors					
		LC1 FG150	LC1 FG185	LC1 FG265	LC1 FG400	LC1 FG500	LC1 FG630
V		A	A	A	A	A	A
24	1	160	220	300	400	600	850
	2	160	220	300	400	600	850
	3	160	220	300	400	600	850
	4	160	220	300	400	600	850
48/75	1	160	220	300	400	600	850
	2	160	220	300	400	600	850
	3	160	220	300	400	600	850
	4	160	220	300	400	600	850
125	1	–	–	–	–	–	–
	2	130	170	300	400	550	850
	3	130	170	300	400	600	850
	4	130	170	300	400	600	850
225	1	–	–	–	–	–	–
	2	100	150	250	350	450	700
	3	130	170	300	400	600	850
	4	130	170	300	400	600	850
300	3	100	150	250	350	450	700
	4	130	170	300	400	600	850
460	4	100	150	250	350	450	700

Use in category DC-2 to DC-5 (inductive loads; time constant L/R ⩽ 15 ms)

Rated operational current Ie

Operational voltage (Ue)	Number of poles to be wired in series	Contactors					
		LC1 FG150	LC1 FG185	LC1 FG265	LC1 FG400	LC1 FG500	LC1 FG630
V		A	A	A	A	A	A
24	1	140	180	280	350	550	850
	2	140	180	280	350	550	850
	3	140	180	280	350	550	850
	4	140	180	280	350	550	850
48/75	1	140	180	280	350	550	850
	2	140	180	280	350	550	850
	3	140	180	280	350	550	850
	4	140	180	280	350	550	850
125	1	–	–	–	–	–	–
	2	100	140	250	350	550	850
	3	120	160	280	350	550	850
	4	120	160	280	350	550	850
225	1	–	–	–	–	–	–
	2	80	100	200	280	450	700
	3	100	140	250	350	550	850
	4	120	160	280	350	550	850
300	3	80	100	200	280	450	700
	4	120	160	280	350	550	850
460	4	80	100	200	280	450	700

Presentation: pages B9/68 and B9/69
Characteristics: pages B9/76 to B9/83
References: page B9/6
Dimensions, schemes: pages B9/84 and B9/85

TeSys contactors
TeSys LC1 FG 3-pole shockproof contactors d.c. power
Selection guide for utilisation categories DC-1 to DC-5

Electrical durability
Utilisation categories DC-1 to DC-5

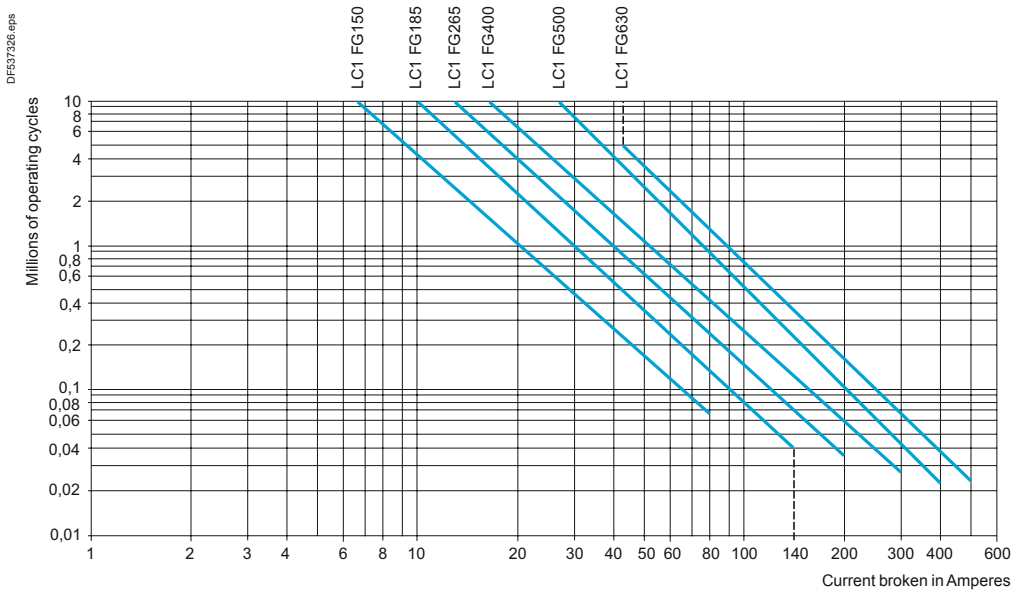

Determining the electrical durability
The electrical durability can be read directly from the curve above, having previously calculated the power broken Pc. The following table gives, for each utilisation category, the value of Pc according to the operational current Ie and the operational voltage Ue.

Utilisation categories		**Pc** (Power broken)
DC-1	Non-inductive loads	Pc = Ue x Ie
DC-2	Shunt motors, breaking whilst running	Pc = 0.1 Ue x Ie
DC-3	Shunt motors, reversing	Pc = Ue x 2.5 Ie
DC-4	Series wound motors, breaking whilst running	Pc = 0.3 Ue x Ie
DC-5	Series wound motors, reversing	Pc = Ue x 2.5 Ie
Counter current braking (plugging)		Pc = 1.5 Ue x 1.5 Ie

Example:
Series wound motor, breaking whilst motor running, category DC-4.
P = 50 kW, Ue = 200 V, Ie = 250 A.
Select contactor **LC1 FG265** with 3 poles in series.
The power broken is: Pc = 0.3 Ue x Ie = 0.3 x 200 x 250 = 15 kW.
The electrical durability read from the curve is 8 million operating cycles.

Maximum operating rate
The following operating rate used at Ie must not be exceeded: 120 operating cycles/hour.

Use of poles in parallel
The electrical durability is equal to the number of operating cycles performed by a pole, multiplied by the number of poles in parallel, multiplied by a coefficient of 0.70.

TeSys contactors

TeSys LC1 FG 3-pole shockproof contactors

Control circuit: a.c. supply

Environment

Contactor type			LC1 FG150	LC1 FG185
Rated insulation voltage (Ui)	Conforming to IEC 60947-4-1	V	1000	
	Conforming to VDE 0110 gr C	V	1500	
Rated impulse withstand voltage (Uimp)	Coil not connected to the power circuit	kV	8	
Conforming to standards			EN 60947-1, EN 60947-4-1, IEC 60947-1, IEC 60947-4-1	
Product certifications			N.A.T.O.	
Degree of protection	Conforming to IEC 60529		IP 20 front face with shrouds LA9 F	
	Conforming to VDE 0106		Front face protected against direct finger contact with shrouds LA9 F	
Protective treatment	Standard version		"TH"	
Ambient air temperature around the device	Storage	°C	-60…+80	
	Operation	°C	-5…+55	
	Permissible at Uc (1)	°C	-40…+70	
Maximum operating altitude	Without derating	m	3000	
Operating positions	Without derating		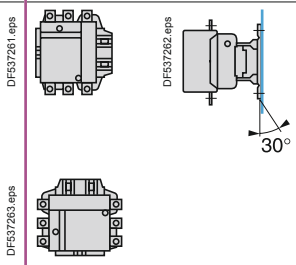	
	With derating (3)		**Fixing A** 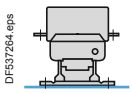 **Fixing B** 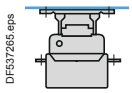	
	Not to be used		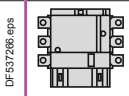	
Shock resistance (2)			12 g, 50 ms on the three axes: X, Y, Z	
			15 g, 11 ms on the three axes: X, Y, Z	

*(1) In these conditions, it is recommended that coils LX9F be used for contactor sizes **FG150** to **FG265**.*
(2) In the least favourable direction, without change of contact state (coil at Uc).
(3) Horizontal fixing:
- *the operational current AC-1 is equivalent to 80 % of the value indicated in the catalogue*
- *breaking and making capacities not guaranteed*
- *mechanical and electrical durabilities not guaranteed.*

Derating of pull-in and drop-out voltage

Contactors LC1		FG150	FG185	FG265	FG400	FG500	FG630
Fixing A	Pull-in	75 %	75 %	75 %	80 %	80 %	80 %
	Drop-out	105 %	105 %	105 %	110 %	110 %	110 %
Fixing B	Pull-in	115 %	115 %	115 %	120 %	120 %	120 %
	Drop-out	90 %	90 %	90 %	95 %	95 %	95 %

Presentation: pages B9/68 and B9/69
Selection: pages B9/70 to B9/75
References: page B9/6
Dimensions, schemes: pages B9/84 and B9/85

TeSys contactors

TeSys LC1 FG 3-pole shockproof contactors

Control circuit: a.c. supply

LC1 FG265	LC1 FG400	LC1 FG500	LC1 FG630
1000			
1500			
8			
EN 60947-1, EN 60947-4-1, IEC 60947-1, IEC 60947-4-1			
N.A.T.O.			
IP 20 front face with shrouds LA9 F			
Front face protected against direct finger contact with shrouds LA9 F			
“TH”			
-60…+80			
-5…+55			
-40…+70			
3000			
DF537261.eps  DF537262.eps 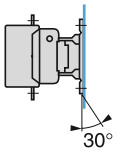			
DF537263.eps 			
A DF537264.eps 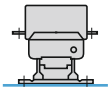			
B DF537265.eps 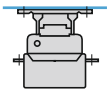			
DF537266.eps 			
12 g, 50 ms on the three axes: X, Y, Z			
15 g, 11 ms on the three axes: X, Y, Z			

TeSys contactors

TeSys LC1 FG 3-pole shockproof contactors

Control circuit: a.c. supply

Pole characteristics

Contactor type				LC1 FG150	LC1 FG185
Number of poles				3	3
Rated operational current (Ie) (Ue ≤ 440 V)	In AC-3, θ ≤ 55 °C	θ ≤ 70 °C	**A**	150/150	185/180
	In AC-1, θ ≤ 55 °C	θ ≤ 70 °C	**A**	220/170	240/180
Rated operational voltage (Ue)	Up to		**V**	1000	1000
Frequency limits	Of the operational current (1)		**Hz**	25 to 200	25 to 200
Conventional thermal current	θ ≤ 40		**°C**	250	275
Rated making capacity	I rms conforming to IEC 60947-4-1		**A**	Making current: 10 x I in AC-3	
Rated breaking capacity	I rms conforming to IEC 60947-4-1		**A**	Making and breaking current: 8 x I in cat. AC-3	
Permissible short time rating No current flowing for preceding 60 minutes with θ ≤ 40 °C	For 1.5 or 10 s		**A**	1200	1500
	For 30 s		**A**	700	920
	For 1 mn		**A**	600	740
	For 3 mn		**A**	450	500
	For 10 mn		**A**	350	400
Fuse protection against short-circuits (U ≤ 440 V)	Motor circuit (type aM)		**A**	160	200
	With thermal overload relay (type gG)		**A**	200	315
	gG fuses		**A**	250	315
Average impedance per pole	At Ith and 50 Hz		**mΩ**	0.35	0.33
Power dissipation per pole for the above operational currents	AC-3		**W**	8	12
	AC-1		**W**	22	25
Cabling Minimum c.s.a.	Bar	No. of bars		2	2
		Bar	**mm**	25 x 3	25 x 3
	Cable with lug		**mm²**	120	150
	Cable with connector		**mm²**	120	150
	Bolt diameter		**mm**	Ø8	Ø8
Tightening torque	Power circuit connections		**N.m**	18	18

(1) Sine wave without interference. Above these values, please consult your Regional Sales Office.

TeSys contactors

TeSys LC1 FG 3-pole shockproof contactors

Control circuit: a.c. supply

LC1 FG265	LC1 FG400	LC1 FG500	LC1 FG630
3	3	3	3
265/250	400/340	500/500	630/630
300/250	430/340	580/500	850/700
1000	1000	1000	1000
25 to 200	25 to 200	25 to 200	25 to 200
350	500	700	1000
Making current: 10 x I in AC-3			
Making and breaking current: 8 x I in AC-3			
2200	3600	4200	5050
1230	2400	3200	4400
950	1700	2400	3400
620	1200	1500	2200
480	1000	1200	1600
315	400	500	630
500	630	800	800
400	500	800	1000
0.3	0.26	0.18	0.12
21	42	45	48
37	65	88	120
2	2	2	2
32 x 4	30 x 5	40 x 5	60 x 5
240	2 x 150	2 x 240	–
240	–	–	–
Ø10	Ø10	Ø10	Ø12
35	35	35	58

TeSys contactors

TeSys LC1 FG 3-pole shockproof contactors

Control circuit: a.c. supply

Control circuit characteristics with LX1 coil

Contactor type					LC1 FG150	LC1 FG185
Rated control circuit voltage (Uc)		50 or 60 Hz		V	48…440	
Control voltage limits (θ ≤ 55 °C)	50 or 60 Hz coils	Operation			0.85…1.1 Uc	
		Drop-out			0.35…0.55 Uc	
	40…400 Hz coils	Operation			–	
		Drop-out			–	
Average consumption at 20 °C and at Uc	∼ 50 Hz	Inrush	50 Hz coil	VA	550	805
			40…400 Hz coil	VA	–	–
			Cos φ		0.3	0.3
		Sealed	50 Hz coil	VA	45	55
			40…400 Hz coil	VA	–	–
			Cos φ		0.3	0.3
	∼ 60 Hz	Inrush	60 Hz coil	VA	660	970
			40…400 Hz coil	VA	–	–
			Cos φ		0.3	0.3
		Sealed	60 Hz coil	VA	55	66
			40…400 Hz coil	VA	–	–
			Cos φ		0.3	0.3
Heat dissipation				W	12…16	18…24
Operating time (1)		Closing "C"		ms	23…35	20…35
		Opening "O"		ms	5…15	7…15
Mechanical durability at Uc		In millions of operating cycles			10	10
Maximum operating rate at ambient temperature ≤ 55 °C		In operating cycles per hour			2400	2400
Cabling Min/max c.s.a.	Flexible cable without cable end		1 or 2 conductors	mm²	1/4	1/4
	Flexible cable with cable end		1 conductor	mm²	1/4	1/4
			2 conductors	mm²	1/2.5	1/2.5
	Solid cable without cable end		1 or 2 conductors	mm²	1/4	1/4
Tightening torque				N.m	1.2	1.2

Characteristics of the locking electromagnet (shockproof device)

Contactor type			LC1 FG150	LC1 FG185
Control circuit voltage 50/60 Hz		V	48…440	48…440
Inrush consumption		VA	100	100
Maximum energisation time at Uc		ms	20	20
Maximum operating rate	In operating cycles per hour		2400	2400
Mechanical durability at Uc	In millions of operating cycles		1 x 10^6	1 x 10^6

(1) The closing time "C" is measured from the moment the coil supply is switched on to initial contact of the main poles.
The opening time "O" is measured from the moment the coil supply is switched off to the moment the main poles separate.

Presentation: pages B9/68 and B9/69 | Selection: pages B9/70 to B9/75 | References: page B9/6 | Dimensions, schemes: pages B9/84 and B9/85

TeSys contactors

TeSys LC1 FG 3-pole shockproof contactors

Control circuit: a.c. supply

LC1 FG265	LC1 FG400	LC1 FG500	LC1 FG630
48…440	110…440	110…440	110…440
–	–	–	–
–	–	–	–
0.85…1.1 Uc	0.85…1.1 Uc	0.85…1.1 Uc	0.85…1.1 Uc
0.35…0.55 Uc	0.3…0.5 Uc	0.3…0.5 Uc	0.25…0.5 Uc
–	–	–	–
650	1075	1100	1650
0.9	0.9	0.9	0.9
–	–	–	–
10	15	18	22
0.9	0.9	0.9	0.9
–	–	–	–
650	1075	1100	1650
0.9	0.9	0.9	0.9
–	–	–	–
10	15	18	22
0.9	0.9	0.9	0.9
8	14	18	20
40…65	40…75	40…75	40…80
100…170	100…170	100…170	100…200
10	10	10	10
2400	2400	2400	1200
1/4	1/4	1/4	1/4
1/4	1/4	1/4	1/4
1/2.5	1/2.5	1/2.5	1/2.5
1/4	1/4	1/4	1/4
1.2	1.2	1.2	1.2

LC1 FG265	LC1 FG400	LC1 FG500	LC1 FG630
48…440	110…440	110…440	110…440
100	100	100	100
20	20	20	20
2400	2400	2400	1200
1 x 10^6	1 x 10^6	1 x 10^6	1 x 10^6

TeSys contactors

TeSys LC1 FG 3-pole shockproof contactors

Auxiliary contact blocks

Environment

Contact block type			LAD N	LAD T and LAD S	LAD R
Conforming to standards			IEC 60947-5-1, NF C 63-140, VDE 0660, BS 4794, EN 60947-5-1		
Product certifications			UL, CSA		
Protective treatment	Conforming to IEC 60068		"TH"		
Degree of protection	Conforming to VDE 0106		Protection against direct finger contact IP2X		
Ambient air temperature around the device	Storage	°C	-60…+80		
	Operation	°C	-5…+60		
	Permissible for operation at Uc	°C	-40…+70		
Maximum operating altitude	Without derating	m	3000		
Cabling	Phillips n° 2 and Ø6 mm. Flexible or solid cable with or without cable end	mm²	Min: 1 x 1; max: 2 x 2.5		

Instantaneous and time delay contact characteristics

Contact block type				LAD N	LAD T and LAD S	LAD R
Number of contacts				1 or 4	2	2
Rated operational voltage (Ue)	Up to		V	660		
Rated insulation voltage (Ui)	Conforming to IEC 60947-5-1		V	690		
	Conforming to UL, CSA		V	600		
Conventional thermal current (Ith)	For ambient temperature ⩽ 60 °C		A	10		
Frequency of the operational current			Hz	25…400		
Minimum switching capacity	U min		V	17		
	I min		mA	5		
Short-circuit protection	Conforming to IEC 60947-5-1 and VDE 0660. gG fuse		A	10		
Rated making capacity	Conforming to IEC 60947-5-1, I rms		A	∼ 140; ⎓ 250		
Short-time rating	Permissible for	1 s	A	100		
		500 ms	A	120		
		100 ms	A	140		
Insulation resistance			MΩ	> 10		
Non-overlap time	Guaranteed between N/C and N/O contacts		ms	1.5 (on energisation and on de-energisation)		
Time delay (LADT, R and S contact blocks) Accuracy only valid for setting range indicated on the front face	Ambient air temperature for operation		°C	–	-40…+70	-40…+70
	Repeat accuracy			–	±2 %	±2 %
	Drift up to 0.5 million operating cycles			–	+15 %	+15 %
	Drift depending on ambient air temperature			–	0.25 % per °C	0.25 % per °C
Mechanical durability	In millions of operating cycles			30	5	5

Rated operational power of contacts Conforming to IEC 60947-5-1		V	24	48	110/127	220/230	380/400	440	600
	1 million operating cycles	VA	150	300	400	480	500	500	500
	3 million operating cycles	VA	80	170	250	290	320	320	320
	10 million operating cycles	VA	30	65	90	120	130	130	130
	Occasional making capacity	VA	1200	2600	7000	13 000	15 000	13 000	9000

References: page B9/27

Schemes: page B9/85

TeSys contactors

TeSys LC1 FG 3-pole shockproof contactors

Auxiliary contact blocks

Environment

Module type			LAD T (On-delay)	LAD R (Off-delay)
Conforming to standards			IEC 60255-5	
Product certifications			UL, CSA	
Protective treatment	Conforming to IEC 60068		"TH"	
Degree of protection	Conforming to VDE 0106		Protection against direct finger contact IP2X	
Ambient air temperature around the device	Storage	°C	-40…+80	
	Operation	°C	-25…+55	
	For operation at Uc	°C	-25…+70	
Rated insulation voltage (Ui)	Conforming to IEC 60947-1	V	250	
Cabling	Phillips n° 2 and Ø6 mm. Flexible or solid cable with or without cable end	mm²	Min: 1 x 1; max: 2 x 2.5	

Control circuit characteristics

Module type			LAD T (On-delay)	LAD R (Off-delay)
Built-in protection	Of the input		By varistor	By varistor
	Contactor coil suppression		By varistor	By bidirectional peak limiting diode
Rated control circuit voltage (Uc)		V	∿ or ⎓ 24…250	∿ 24…250
Permissible variation			0.8…1.1 Uc	0.8…1.1 Uc
Control type			By mechanical contact only	By mechanical contact only connecting cable < 10 m

Time delay characteristics

Module type			LAD T (On-delay)	LAD R (Off-delay)
Timing ranges		s	0.1…2 ; 1.5…30 ; 25…500	0.1…2 ; 1.5…30 ; 25…500
Repeat accuracy	0…40 °C		±3 % (10 ms minimum)	±3 % (10 ms minimum)
Reset time	During time delay period	ms	150	225
	After time delay period	ms	50	–
Immunity to microbreaks	During time delay period	ms	10	20
	After time delay period	ms	2	–
Minimum impulse duration		ms	–	40
Time delay signalling	By LED		Illuminates during time delay period	Illuminates during time delay period

Switching characteristics (solid state type)

Module type			LAD T (On-delay)	LAD R (Off-delay)
Maximum power dissipated		W	2	3.5
Leakage current		mA	< 5	< 5
Residual voltage		V	3.3	3.3
Overvoltage protection			3 kV; 0.5 joule	3 kV; 0.5 joule
Electrical durability	In millions of operating cycles		30	30

Operating diagrams

Electronic On-delay timer LAD T

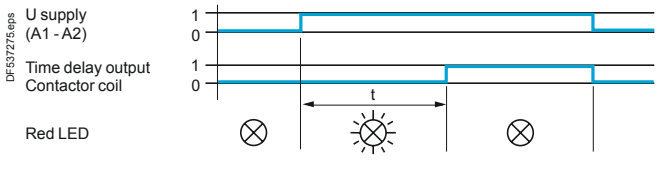

Electronic Off-delay timer LAD R

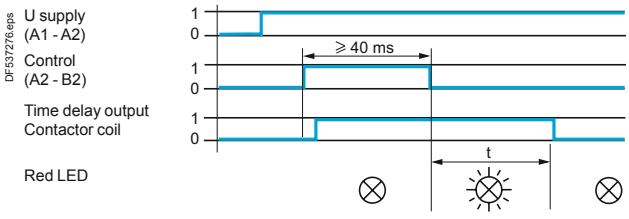

References: page B9/27

Schemes: page B9/85

TeSys contactors
TeSys LC1 FG 3-pole shockproof contactors

TeSys FG

Dimensions
LC1 FG150, FG185 and FG265

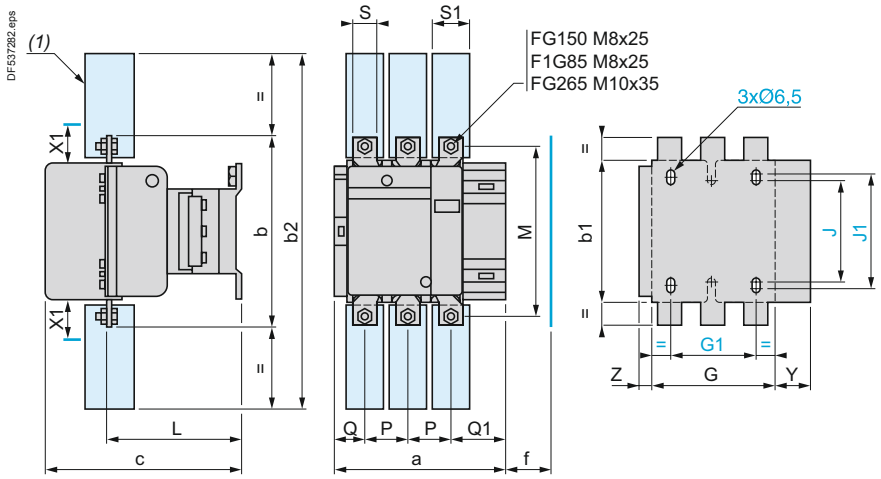

X1 (mm) = Minimum electrical clearance according to operating voltage and breaking capacity.

LC1	200…500 V	600…1000 V
FG150	10	15
FG185	10	15
FG265	10	15

(1) Power terminal protection shroud (see page B9/14).

LC1	a	b	b1	b2	c	f	G	G1	J	J1	L	M	P	Q	Q1	S	S1	Y	Z
FG150	181	170	137	301	180	131	106	80	106	120	116	150	40	26	57.5	20	34	44	13.5
FG185	183.5	174	137	305	190	130	111	80	106	120	122.5	154	40	29	59.5	20	34	44	13.5
FG265	217.5	203	145	375	222	147	142	96	106	120	150	178	48	39	66.5	25	44.5	38	21.5

f = minimum distance required for coil removal.

LC1 FG400 and FG500

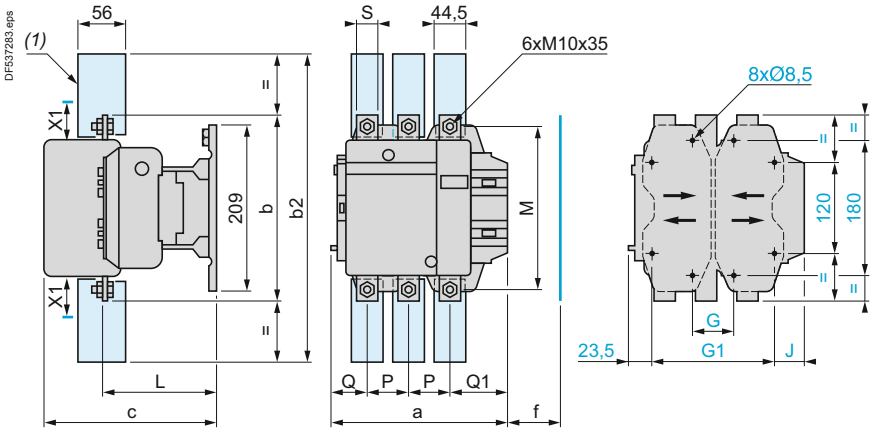

X1 (mm) = Minimum electrical clearance according to operating voltage and breaking capacity.

LC1	200…500 V	600…1000 V
FG400	15	20
FG500	15	20

(1) Power terminal protection shroud (see page B9/14).

LC1	a	b	b2	c	f	G supplied	G min.	G max.	G1 supplied	G1 min.	G1 max.	J	L	M	P	Q	Q1	S
FG400	237	206	375	234	146	80	66	102	223	156	192	19.5	160	181	48	75	74	25
FG500	257	238	400	247	150	80	66	120	223	156	210	39.5	181	208	55	78	77	30

f = minimum distance required for coil removal.

TeSys contactors

TeSys LC1 FG 3-pole shockproof contactors

Dimensions

LC1 FG630

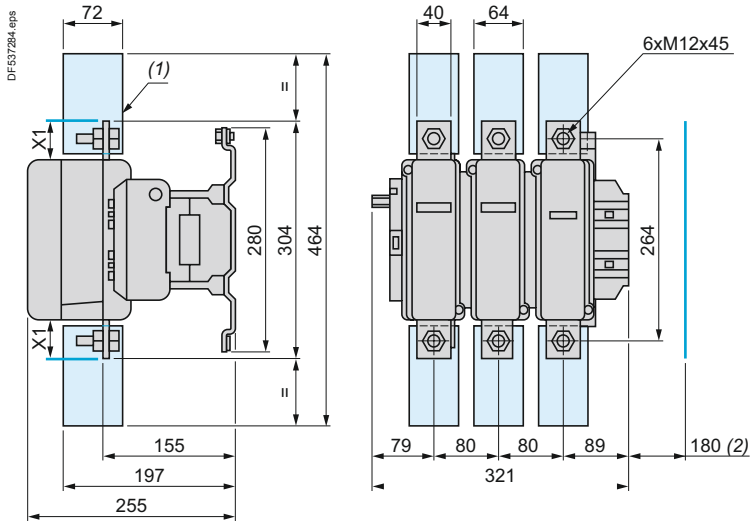

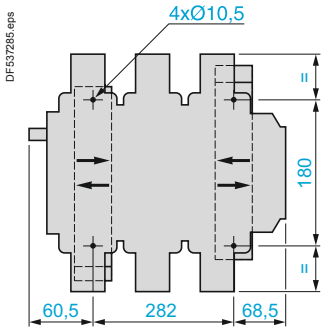

X1 (mm) = Minimum electrical clearance according to operating voltage and breaking capacity.

LC1	200…500 V	690…1000 V
FG630	20	30

(1) Power terminal protection shroud (see page B9/14).
(2) Minimum distance required for coil removal.

Schemes

Contactors LC1-FG150 to FG630

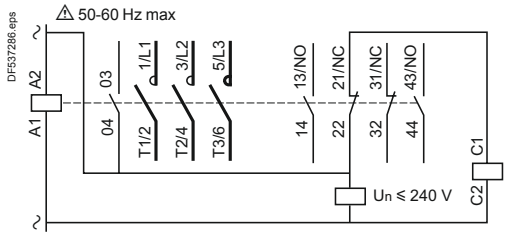

Add-on blocks

Instantaneous auxiliary contacts

1 N/O LAD N10

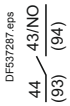

1 N/C LAD N01

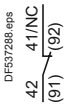

2 N/O + 2 N/C LAD N22

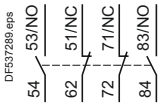

4 N/O LAD N40

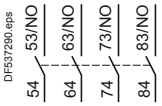

4 N/C LAD N04

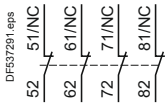

3 N/O + 1 N/C LAD N31

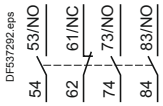

Time delay auxiliary contacts

On-delay 1 N/O + 1 N/C LAD T●

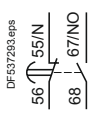

Off-delay 1 N/O + 1 N/C LAD R●

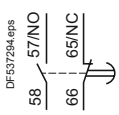

Coils ∼

LX1 FF, FG, FH, FJ, FK and FL

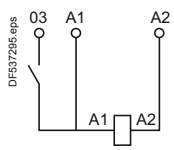

Presentation: pages B9/68 and B9/69
Selection: pages B9/70 to B9/75
Characteristics: pages B9/76 to B9/83
References: pages B9/6, B9/28 and B9/29

TeSys contactors

TeSys CR1 F magnetic latching contactors

PF526338R.eps



CR1 F500

Magnetic latching contactors of both block and bar mounted types are fitted with a special electromagnet which enables them to remain in the “On” position when the coil is no longer energised.

Applications

The special properties of magnetic latching contactors make them suitable for a large number of applications.

Properties

- Retention of the sequence memory in automatic control equipment in the event of loss of control voltage.
- Energy saving, since the source of supply to the coil does not need to supply current when the contactor is latched in the closed state.
- Change of state from “Closed” to “Open” by current signal through the coil.
- Unaffected by mains interference.
- Utilisation of contactors beyond their breaking capacity, as operations are performed off-load.
- Contactors are silent in the latched position.

Applications

- Refineries, power stations, excitation circuits.
- Contactors remaining in the closed state for long periods.

Examples: refineries, power supplies, low voltage distribution.

- Selective opening control.
- No unwanted opening and closing of the main power poles.
- Current carrying at voltages up to 1000 Volts.

Operation of the electromagnet

CR1 F block contactors

CR1 F magnetic latching contactors are fitted with a double coil with 3 terminals comprising a latching winding and an unlatching winding. The 2 windings have a common point which can necessitate special wiring precautions when the latching supply is separate from the unlatching supply.

The power supplies may be a.c. or d.c. For d.c. operation, the polarities indicated must be complied with.

Operating precautions:

- the 2 windings must not be supplied simultaneously
- a winding must not be supplied continuously
- supply to the coils must be via pulsed contacts.

Manual opening:
if the control voltage is not present, the contactor can be unlatched manually.

CR1 B bar mounted contactors

CR1 B magnetic latching contactors are fitted with a single coil, supplied with d.c. or with a.c. through a rectifier.

Latching is obtained by direct supply of the coil in one direction of current flow.

Unlatching is obtained by a reverse current, adjusted by resistors.

Mechanical latching contactors

LC1 D block contactors

For applications using smaller contactor sizes than those described on page B9/78, it is possible to obtain the same function by the addition of a mechanical latch block type LA6 DK, which can be mounted on LC1 D contactors (see page B9/78).

TeSys contactors

TeSys CR1 F magnetic latching contactors

Selection guide for direct on-line starting of squirrel cage motors

Continuous or intermittent duty up to 30 operating cycles/hour

Motor (1) 220 V 230 V			380 V 400 V			415 V			440 V			3-pole contactor (2)	3-pole differential thermal overload relay		3 fuses Type	
													Reference	Setting range	aM	BS-88
P		In	P		In	P		In	P		In	Reference			Rating	
kW	HP	A	kW	HP	A	kW	HP	A	kW	HP	A			A	A	A
25	35	85	–	–	–	–	–	–	–	–	–	CR1F150	LR9F5367	60…100	100	125
30	40	103	51	70	98	55	75	100	59	80	97	CR1F150	LR9F5369	90…150	100	160
33	45	113	55	75	105	–	–	–								
–	–	–	59	80	112	59	80	105	63	85	109	CR1F150	LR9F5369	90…150	125	160
–	–	–	63	85	117	63	85	115	–	–	–					
37	50	126	75	100	138	75	100	135	75	100	125	CR1F150	LR9F5369	90…150	160	200
40	54	134	–	–	–	–	–	–	80	110	131					
45	60	150	80	110	147	80	110	138	90	125	146	CR1F185	LR9F5369	90…150	160	200
51	70	170	90	125	170	90	125	165	100	136	162	CR1F185	LR9F5371	132…220	200	250
55	75	182	–	–	–	100	136	182	–	–	–					
59	80	195	100	138	188	110	150	200	110	150	178	CR1F265	LR9F5371	132…220	250	315
63	85	203	110	150	205	–	–	–	129	175	209					
75	100	240	129	175	242	129	175	230	132	180	215	CR1F265	LR9F7375	200…330	250	315
–	–	–	132	180	245	132	180	240	–	–	–					
–	–	–	–	–	–	140	190	250	140	190	227	CR1F265	LR9F7375	200…330	315	400
80	110	260	140	190	260	147	200	260	147	200	236	CR1F400	LR9F7375	200…330	315	400
–	–	–	147	200	273	150	205	270	150	205	246					
–	–	–	150	205	280	160	220	280	160	220	256					
90	125	295	160	220	300	–	–	–	180	245	289	CR1F400	LR9F7375	200…330	315	400
–	–	–	–	–	–				185	250	295					
100	136	325	180	245	333	180	245	320	200	270	321	CR1F400	LR9F7379	300…500	400	500
110	150	356	185	250	342	185	250	325	220	300	353					
–	–	–	200	270	370	200	270	340	250	340	401	CR1F400	LR9F7379	300…500	400	500
						220	300	385	–	–	–					
129	175	420	220	300	408	–	–	–	257	350	412	CR1F500	LR9F7379	300…500	500	630
132	180	425	250	340	460	250	340	425	280	380	450	CR1F500	LR9F7381	380…630	500	630
140	190	450	–	–	–	257	350	450	–	–	–					
147	200	472	–	–	–	–	–	–	295	400	473	CR1F500	LR9F7381	380…630	500	630
–	–	–	257	350	475	280	380	475	300	410	481	CR1F630	LR9F7381	380…630	500	630
			–	–	–	295	400	500	–	–	–					
150	205	483	280	380	510	300	410	510	315	430	505	CR1F630	LR9F7381	380…630	630	800
160	220	520	295	400	546	315	430	535	335	450	518					
180	245	578	300	410	565	335	450	550	355	480	549	CR1F630	LR9F7381	380…630	630	800
185	250	595	315	430	584	355	480	580	375	500	575					
200	270	626	335	450	620	375	500	610	400	454	611	CR1F630	LR9F7381	380…630	800	1000
220	★	700	355	★	635	400	★	650	425	★	650	CR1BL33		500…800	800	1000
			375	★	670	425	★	690	445	★	680					
			400	★	710	445	★	730	450	★	690					
			–		–	450	★	740	475	★	730					
250	★	800	425	★	760	475	★	780	500	★	780	CR1BM33		500…800	800	1000
257	★	826	445	★	790	500	★	820	530	★	825	CR1BM33		630…1000	1000	1250
280	★	900	450	★	800	530	★	870	560	★	870					
295	★	948	475	★	850	560	★	920	600	★	920					
300	★	980	500	★	900	600	★	978	630	★	965					
315	★	990	530	★	950											

(1) The ratings are for standard 220/230 V, 380/400 V, 415 or 440 V motors. The overload relays should preferably be set to the motor full-load current shown on the motor rating plate. For other power ratings, select the overload relay with the appropriate range; the associated contactor and fuses must have ratings equal to or immediately greater than In.

(2) Reference to be completed, see page B9/79.

★ There are no standard power ratings for these motors.

Characteristics: pages B9/92 to B9/95

References: pages B9/7, B9/30 to B9/35

Dimensions: pages B9/96 to B9/99

TeSys contactors

TeSys CR1 F magnetic latching contactors

Selection guide for utilisation category AC-3

Rated operational current in AC-3 (θ ≤ 55 °C)											
Contactor size		**CR1 F150**	**CR1 F185**	**CR1 F265**	**CR1 F400**	**CR1 F500**	**CR1 F630**	**CR1 BL**	**CR1 BM**	**CR1 BP**	**CR1 BR**
440 V	**A**	150	185	265	400	500	630	750	1000	1500	1800
500 V	**A**	135	175	245	385	500	540	750	900	1200	1500
660/690 V	**A**	130	140	230	365	435	470	700	800	900	1100
1000 V	**A**	47	73	95	135	270	330	400	400	500	600
Rated operational power (standard motor power ratings)											
220…240 V	**kW**	40	55	75	110	147	200	220	280	425	500
	HP	*54*	*75*	*100*	*150*	*200*	*270*	*300*	*380*	*580*	*680*
380…400 V	**kW**	75	90	132	200	250	335	400	500	750	900
	HP	*100*	*185*	*180*	*270*	*340*	*450*	*545*	*680*	*1000*	*1220*
415 V	**kW**	80	100	140	220	280	375	425	530	800	900
	HP	*110*	*136*	*180*	*300*	*380*	*500*	*580*	*720*	*1100*	*1220*
440 V	**kW**	80	100	140	250	295	400	450	560	800	900
	HP	*110*	*136*	*190*	*340*	*400*	*545*	*610*	*760*	*1100*	*1220*
500 V	**kW**	90	110	160	257	355	400	500	600	750	900
	HP	*125*	*150*	*220*	*350*	*480*	*545*	*680*	*810*	*1000*	*1220*
660/690 V	**kW**	100	110	160	280	335	450	560	670	750	900
	HP	–	–	–	–	–	*610*	*760*	*910*	*1000*	*1220*
1000 V	**kW**	65	100	147	185	335	450	530	530	670	750
	HP	–	*136*	*200*	*250*	–	*610*	*720*	*720*	*910*	*1000*

Maximum operating rate in operating cycles/hour, at rated operational power with an on-load factor = 85 %: 750 for CR1 F150 to F265, 500 for CR1 F400 to F630 and 120 for CR1 B.

Characteristics:
pages B9/92 to B9/95

References:
pages B9/7, B9/30 to B9/35

Dimensions:
pages B9/96 to B9/99

TeSys contactors

TeSys CR1 F magnetic latching contactors

Selection according to required electrical durability

Use in category AC-3 (Ue ≤ 440 V) (1) (θ ≤ 55 °C)

The current (Ic) in AC-3 is equal to the rated operational current (Ie) drawn by the motor.

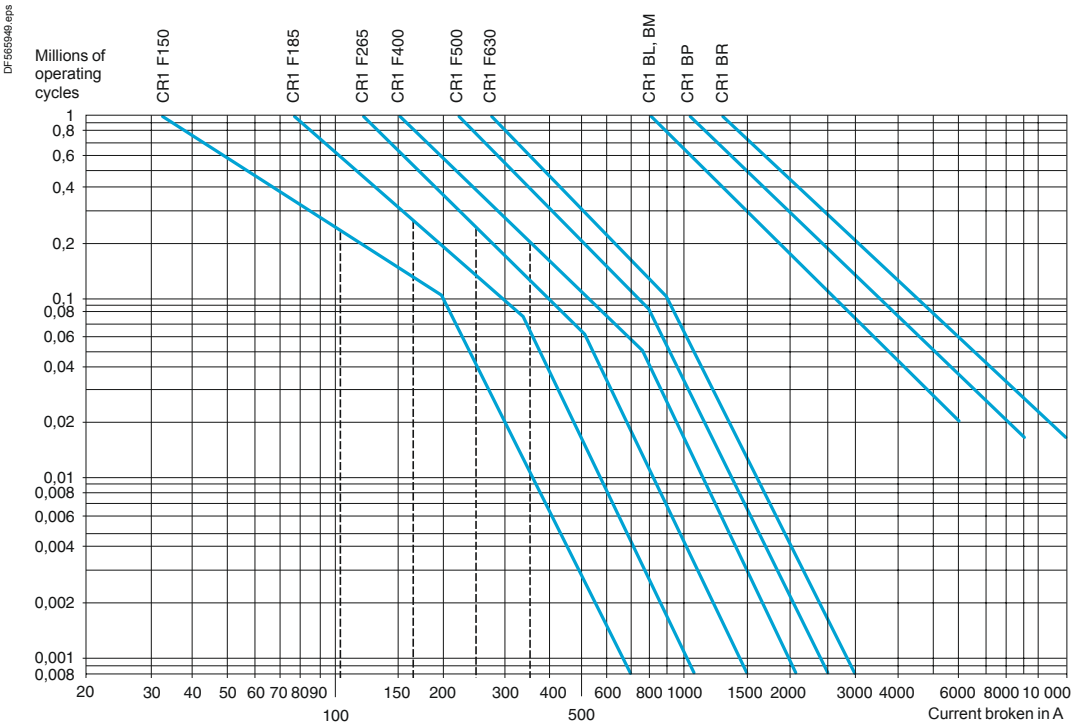

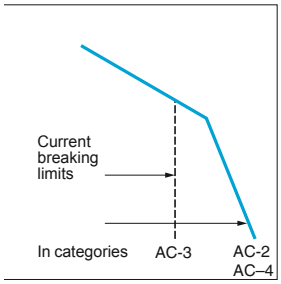

Example:
Asynchronous motor with P = 50 kW, Ue = 380 V, Ie = 100 A, Ic = Ie = 100 A, or asynchronous motor with P = 55 kW, Ue = 415 V, Ie = 100 A, Ic = Ie = 100 A.
600000 operating cycles required.
The above selection curves show the contactor rating needed, CR1 F185.

(1) For 660 V, multiply the number of operating cycles by 0.8.

High power contactors

Characteristics:
pages B9/92 to B9/95

References:
pages B9/7, B9/30 to B9/35

Dimensions:
pages B9/96 to B9/99

TeSys contactors

TeSys CR1 F magnetic latching contactors

Selection guide for utilisation category AC-1 and according to required electrical durability

Maximum operational current (on-load factor ≥ 0.95)

Maximum operating rate: 120 operating cycles/hour

Contactor size			CR1 F150	CR1 F185	CR1 F265	CR1 F400	CR1 F500	CR1 F630	CR1 BL	CR1 BM	CR1 BP	CR1 BR
Cable c.s.a.		mm²	120	150	185	–	–	–	–	–	–	–
Number of bars			–	–	–	2	2	2	2	2	3	4
Bar c.s.a.		mm	–	–	–	30 x 5	40 x 5	60 x 5	50 x 5	80 x 5	100 x 5	100 x 5
Operational current in category AC-1 at ambient temperature	≤ 40 °C	A	250	275	350	500	700	1000	800	1250	2000	2750
	≤ 55 °C	A	250	275	300	430	580	850	700	1100	1750	2400
	≤ 70 °C	A	170	180	250	340	500	700	600	900	1500	2000

Increase in operational current by parallel connection of poles

Apply the following coefficients to the above currents; these coefficients take into account an often unbalanced distribution of current between the poles:

- 2 poles in parallel: K = 1.6
- 3 poles in parallel: K = 2.25
- 4 poles in parallel: K = 2.8.

(1)

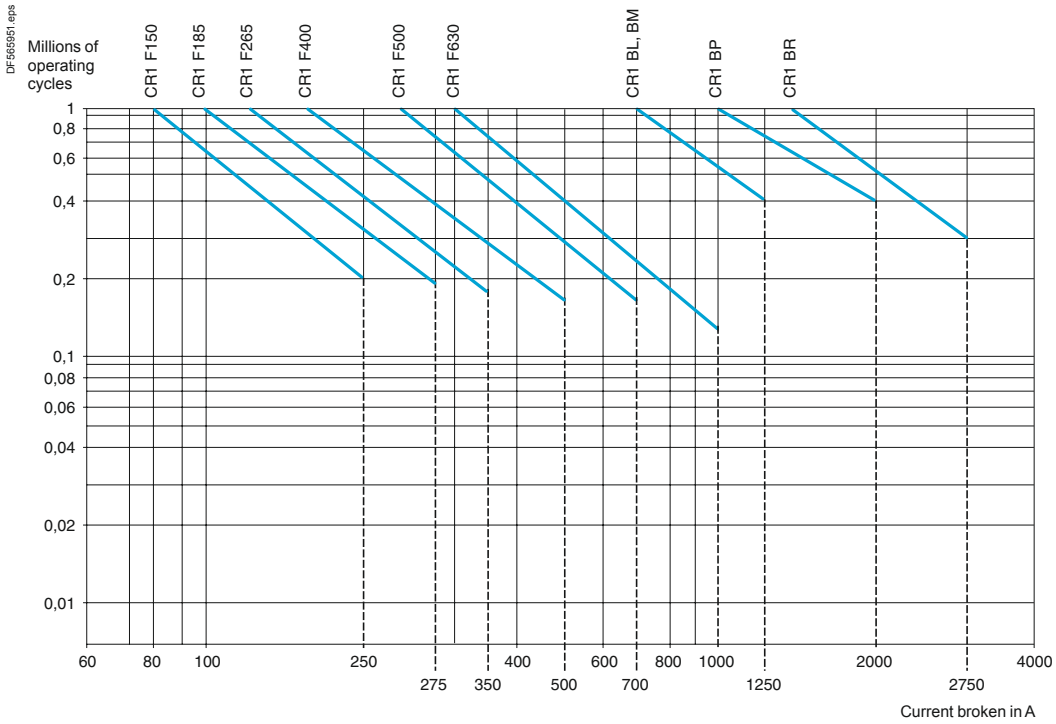

Example:

Ue = 220 V - Ie = 200 A - θ = 40 °C - Ic = Ie = 200 A

600000 operating cycles required.

The above selection curves show the contactor rating needed, CR1 F400.

(1) For 660 V, multiply the number of operating cycles by 0.8.

Characteristics: pages B9/92 to B9/95

References: pages B9/7, B9/30 to B9/35

Dimensions: pages B9/96 to B9/99

TeSys contactors

TeSys CR1 F magnetic latching contactors

Selection guide for switching the primaries of 3-phase transformers

Operating conditions

Maximum ambient temperature: 55 °C.
Maximum operational voltage: 1000 V, 50…60 Hz.

When a transformer is switched on, there is generally an initial current surge which reaches its peak value almost instantaneously and then decreases in a largely exponential manner to quickly reach its steady state value.

The value of this current depends on:
- the characteristics of the magnetic circuit and of the windings (cross sectional area of the core, rated inductance, number of turns, size of the windings, ...)
- the performance of the magnetic laminations used (residual induction and saturation inductance),
- the magnetic state of the circuit and the instantaneous value of the a.c. mains voltage at the moment of switch-on.

The peak current at the moment of switch-on can reach 20 to 40 times the rated current for the various kVA power ratings in the tables below. This value is independent of the “no-load” or “on-load” state of the transformer.

The peak magnetising current of the transformer must be lower than the values given in the tables below.

Contactor selection

Maximum operating rate: 120 operating cycles/hour

Contactor size			CR1 F150	CR1 F185	CR1 F265	CR1 F400	CR1 F500	CR1 F630	CR1 BL	CR1 BM	CR1 BP	CR1 BR
Maximum permissible current peak at switch-on		**A**	1700	2800	3500	5500	6800	9000	18 000	18 000	24 000	30 000
Maximum operational power (1)	220…230 V	**kVA**	25	40	50	75	100	140	230	230	300	380
	380…400 V	**kVA**	50	75	90	130	170	225	400	400	530	660
	415…440 V	**kVA**	55	80	100	140	190	250	450	450	560	700
	500 V	**kVA**	65	95	110	170	225	280	480	480	600	750
	660 V	**kVA**	80	120	140	200	270	315	600	600	800	950
	1000 V	**kVA**	100	150	200	250	375	470	700	700	1000	1200

(1) Maximum operational power corresponding to a current peak at switch-on of 30 In.

Characteristics: pages B9/92 to B9/95
References: pages B9/7, B9/30 to B9/35
Dimensions: pages B9/96 to B9/99

TeSys contactors
TeSys CR1 F magnetic latching contactors

TeSys CR1 F

Environment

Contactor type			CR1 F150	CR1 F185	CR1 F265
Rated insulation voltage (Ui)	Conforming to IEC 60158-1, BS 775, 60947-4	V	1000	1000	1000
	Conforming to VDE 0110 grC	V	1500	1500	1500
Protective treatment	Standard version		"TH"		
	Special version		–		
Ambient air temperature around the device	Storage	°C	-60…+80		
	For operation at Uc	°C	-15…+70		
Maximum operating altitude	Without derating	m	3000		
Operating positions	Without derating		±5 °		

Pole characteristics

Number of poles				3 or 4	3 or 4	3 or 4
Rated operational current (Ie) (Ue ≤ 440 V)	In AC-3, θ ≤ 40 °C		A	150	185	265
	In AC-1, θ ≤ 40 °C		A	250	275	350
	In AC-4, θ ≤ 40 °C		A	138	170	245
Rated operational voltage (Ue)	Up to		V	1000	1000	1000
Frequency limits (sine wave)	Of the opeational current		Hz	25…200	25…200	25…200
Rated making capacity	I rms		A	1700	2100	2940
Rated breaking capacity	I rms	220…440 V	A	1500	1800	2450
		500 V	A	1200	1600	2200
		660/690 V	A	1100	1200	1700
		1000 V	A	450	600	800
Permissible short time rating from cold state, with no current flowing for previous 60 minutes at θ ≤ 40 °C	For 1 s		A	1200	1500	2200
	For 5 s		A	1200	1500	2200
	For 10 s		A	1200	1500	2200
	For 30 s		A	700	920	1230
	For 1 min		A	600	740	950
	For 3 min		A	450	500	620
	For 10 min		A	350	400	480
Short-circuit protection by fuses θ ≤ 440 V	Motor circuit AC-3 (type aM)		A	160	200	315
	AC-1 circuit (type gG, BS 88)		A	250	315	400
Average impedance per pole	At Ith and 50 Hz		mΩ	0.45	0.36	0.32
Power dissipated per pole for the above operational currents	AC-3		W	6	12	22
	AC-1		W	18	26	39
Connection	Number of conductors			1	1	1
	Cable with lugs		mm^2	120	150	240
	Cable with connector		mm^2	120	150	240
	Number of bars			2	2	2
	Bar c.s.a.		mm	25 x 3	25 x 3	32 x 4
	Bolt diameter			Ø8	Ø8	Ø10
	Tightening torque		N.m	18	18	35

Selection: pages B9/87 to B9/91
References: pages B9/7, B9/30 to B9/35
Dimensions: pages B9/96 to B9/99

TeSys contactors
TeSys CR1 F magnetic latching contactors

TeSys CR1 F

CR1 F400	CR1 F500	CR1 F630	CR1 BL	CR1 BM	CR1 BP	CR1 BR
1000	1000	1000	1000	1000	1000	1000
1500	1500	1500	1500	1500	1500	1500
"TH"			"TC"			
–			"TH"			
-60…+80			-60…+80			
-15…+70			-15…+60			
3000			3000			
±5 ° in relation to normal vertical mounting plane			±5 ° in relation to normal vertical mounting plane			
3 or 4	3 or 4	3 or 4	1, 2, 3 or 4	1, 2, 3 or 4	1, 2, 3 or 4	1, 2, 3 or 4
400	500	630	750	1000	1500	1800
500	700	1000	800	1250	2000	2750
370	460	560	700	800	1250	1500
1000	1000	1000	1000	1000	1000	1000
25…200	25…200	25…200	50…60	50…60	50…60	50…60
4500	5000	6740	10 000	10 000	15 000	18 000
4000	5000	6300	10 000	10 000	15 000	18 000
3500	4500	5400	9000	9000	12 000	15 000
3000	3560	4600	8000	8000	9000	11 000
1200	2500	3200	4000	4000	5000	6000
3600	4200	5050	9600	9600	12 000	15 000
3600	4200	5050	9600	9600	12 000	15 000
3600	4200	5050	7000	8000	9600	12 000
2400	3200	4400	4800	5200	6400	8000
1700	2400	3400	3500	3800	5200	6300
1200	1500	2200	2100	2400	3600	4400
1000	1200	1600	1200	1800	2800	3600
400	500	630	800	1200	800 x 2 (1)	1000 x 2 (1)
500	800	1000	800	1200	1000 x 2 (1)	1200 x 2 (1)
0.28	0.18	0.12	0.18	0.18	0.13	0.09
45	45	48	88	180	290	360
70	88	120	115	280	520	680
2	2	–	–	–	–	–
150	240	–	–	–	–	–
–	–	–	–	–	–	–
2	2	2	2	2	3	4
30 x 5	40 x 5	60 x 5	50 x 5	80 x 5	100 x 5	100 x 10
Ø10	Ø10	Ø12	4 x Ø8	4 x Ø10	4 x Ø10	4 x Ø10
35	35	58	21	35	35	35

(1) Paralleling of poles must be carried out only in accordance with the fuse manufacturer's recommendations.

TeSys contactors
TeSys CR1 F magnetic latching contactors

TeSys CR1 F

Control circuit characteristics

Contactor type					CR1 F150	CR1 F185	CR1 F265
Rated control circuit voltage (Uc)	∿ 50 or 60 Hz			V	48…415		
	∿ 400 Hz			V	48…220		
	⎓			V	48…220		
	⎓ low consumption			V	48…220		
Control voltage limits ∿ and ⎓	Latching				0.85…1.1 Uc		
	Unlatching				0.85…1.1 Uc		
Maximum operating rate at ambient temperature ≤ 40 °C	In operating cycles per hour				120		
Mechanical durability	In millions of operating cycles				1		
Average consumption 50/60 Hz	Latching	1-pole		VA	–	–	–
		2-pole		VA	–	–	–
		3-pole		VA	1100	1600	1650
		4-pole		VA	100	1600	1650
	Unlatching	1-pole		VA	–	–	–
		2-pole		VA	–	–	–
		3-pole		VA	7.3	8	9
		4-pole		VA	7.3	8	9
400 Hz and ⎓	Latching	1-pole		VA	–	–	–
		2-pole		VA	–	–	–
		3-pole		VA	1260	1750	1800
		4-pole		VA	1260	1750	1800
	Unlatching	1-pole		VA	–	–	–
		2-pole		VA	–	–	–
		3-pole		VA	10	11	12
		4-pole		VA	10	11	12
⎓ low consumption	Latching	3/4-pole		W	500	500	500
	Unlatching	3/4-pole		W	15	20	40
Average operating time at Uc (1)	Latching			ms	35…40	35…40	45…50
	Unlatching			ms	50…100	50…100	50…100

(1) The closing time is measured from the moment the closing coil is energised to initial contact of the main poles. The opening time is measured from the moment the opening coil is energised to the moment the main poles separate.

Note: *the arcing time depends on the circuit switched by the main poles. For 3-phase applications the arcing time is usually less than 10 ms. The load is isolated from the supply after a time equal to the sum of the opening time and the arcing time.*

Auxiliary contact characteristics

Type of contacts			LAD N for contactors CR1 F
Conventional thermal current		A	10
Rated insulation voltage (Ui)	Conforming to IEC 60947-5-1	V	690
Connection	Flexible or solid conductor with or without cable end	mm²	1 x 1 min; 2 x 2.5 max

Operational power of contacts LAD N for contactors CR1 F

a.c. supply

Electrical durability (valid for up to 3600 operating cycles/hour) on an inductive load such as the coil of an electromagnet: making current (cos φ 0.7) = 10 times the power broken (cos φ 0.4).

	V	48	115	230	400	600
1 million operating cycles	VA	120	280	560	960	1440
Occasional making capacity	VA	2600	7000	13 000	15 000	9000

d.c. supply

Electrical durability (valid for up to 1200 operating cycles/hour) on an inductive load such as the coil of an electromagnet, without economy resistor, the time constant increasing with the load.

	V	48	125	250	440
1 million operating cycles	W	90	75	68	61
Occasional making capacity	W	700	400	260	220

Selection: pages B9/87 to B9/91
References: pages B9/7, B9/30 to B9/35
Dimensions: pages B9/96 to B9/99

TeSys contactors
TeSys CR1 F magnetic latching contactors

TeSys CR1 F

CR1 F400	CR1 F500	CR1 F630	CR1 BL	CR1 BM	CR1 BP	CR1 BR
48…415			110…500			
48…220			110…500			
48…220			110…500			
48…220			–			
0.85…1.1 Uc			0.85…1.1 Uc			
0.85…1.1 Uc			0.85…1.1 Uc			
120			120			
1			1			
–	–	–	650	650	650	650
–	–	–	1100	1100	1100	1100
1450	1650	2100	1650	1650	1650	1650
1450	1650	2100	1850	1850	1850	1850
–	–	–	110	110	110	110
–	–	–	125	125	125	125
12	9.5	8	165	165	165	165
12	9.5	8	175	175	175	175
–	–	–	600	600	600	600
–	–	–	1000	1000	1000	1000
1600	1800	2300	1500	1500	1500	1500
1600	1800	2300	1700	1700	1700	1700
–	–	–	100	100	100	100
–	–	–	115	115	115	115
16	13	11	150	150	150	150
16	13	11	160	160	160	160
500	550	620	–	–	–	–
70	60	45	–	–	–	–
40…75	40…80	40…80	100…150	100…150	100…150	100…150
50…100	50…100	50…100	20…40	20…40	20…40	20…40

(1) The closing time is measured from the moment the closing coil is energised to initial contact of the main poles. The opening time is measured from the moment the opening coil is energised to the moment the main poles separate.

Note: *the arcing time depends on the circuit switched by the main poles. For 3-phase applications the arcing time is usually less than 10 ms. The load is isolated from the supply after a time equal to the sum of the opening time and the arcing time.*

LAD N for contactors CR1 F	ZC4 GM for contactors CR1 B
10	20
690	660
1 x 1 min; 2 x 2.5 max	2 min; 4 max

Operational power of contacts ZC4 GM for contactors CR1 B

a.c. supply

Electrical durability (valid for up to 2400 operating cycles/hour) on an inductive load such as the coil of an electromagnet: making current (cos φ 0.7) = 10 times the power broken (cos φ 0.4).

	V	110 127	220	380	415 440	500
1 million operating cycles	VA	2000	4000	4000	4000	3500
Occasional making capacity	VA	14000	23000	35000	45000	35000

d.c. supply

Electrical durability (valid for up to 1200 operating cycles/hour) on an inductive load such as the coil of an electromagnet, without economy resistor, the time constant increasing with the load.

V	110	120	440	500
W	250	250	230	200
W	1600	800	400	360

Selection: pages B9/87 to B9/91
References: pages B9/7, B9/30 to B9/35
Dimensions: pages B9/96 to B9/99

TeSys contactors
TeSys CR1 F magnetic latching contactors

TeSys CR1 F

CR1 F150 to F500

Common side view

CR1 F150, F185, F265

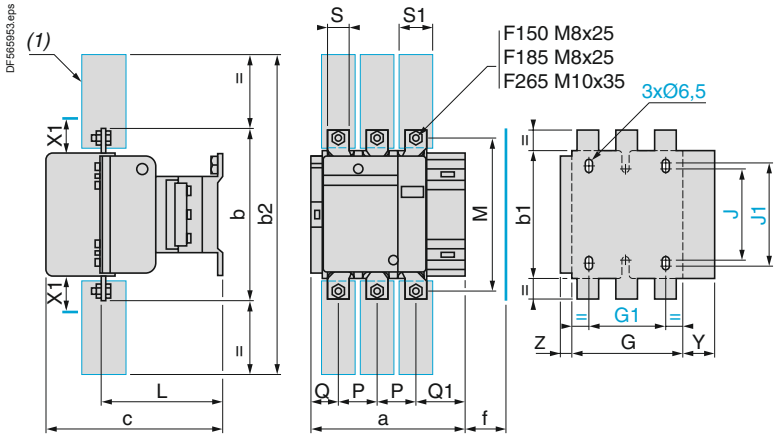

CR1 F400, F500

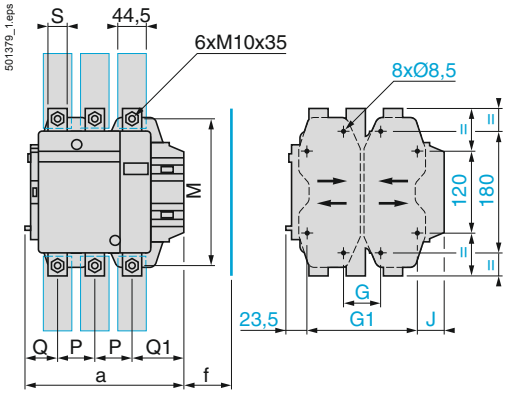

CR1	F150		F185		F265	
	3P	4P	3P	4P	3P	4P
a	163.5	201.5	168.5	208.5	201.5	244.5
b	170	170	174	174	203	203
b1	137	137	137	137	145	145
b2	301	301	305	305	370	370
c	171	171	181	181	213	213
f	131	131	130	130	147	147
G	106	143	111	151	142	190
G1	80	80	80	80	96	96
J	106	106	106	106	106	106
J1	120	120	120	120	120	120
L	107	107	113.5	113.5	141	141
M	150	150	154	154	178	178
P	40	40	40	40	48	48
Q	26	26	29	29	39	34
Q1	57.5	55.5	59.5	59.5	66.5	66.5
S	20	20	20	20	25	25
S1	27	27	34	34	38	38
Y	44	44	38.5	30.5	30.5	21.5
Z	13.5	13.5	13.5	13.5	15.5	15.5

f = minimum distance required for coil removal.

X1: Minimum electrical clearance according to operational voltage and breaking capacity.

Voltage in V	200…500	660…1000
CR1 F150	10	15
CR1 F185	10	15
CR1 F265	10	15

CR1	F400		F500	
	3P	4P	3P	4P
a	213	261	233	288
G min.	66	66	66	66
b	206	206	238	238
b2	375	375	400	400
c	219	219	232	232
f	146	146	150	150
G supplied	80	80	80	140
G max.	102	150	120	175
G1 supplied	170	170	170	230
G1 min.	156	156	156	156
G1 max.	192	240	210	265
J	12	60	32	27
L	145	145	146	146
M	181	181	208	208
P	48	48	55	55
Q	43	43	47	47
Q1	74	74	77	77
S	25	25	30	30

f = minimum distance required for coil removal.

X1: Minimum electrical clearance according to operational voltage and breaking capacity.

Voltage in V	200…500	660…1000
CR1 F400	15	20
CR1 F500	15	20

(1) Power terminal protection shroud (see page B9/14).

CR1 F630

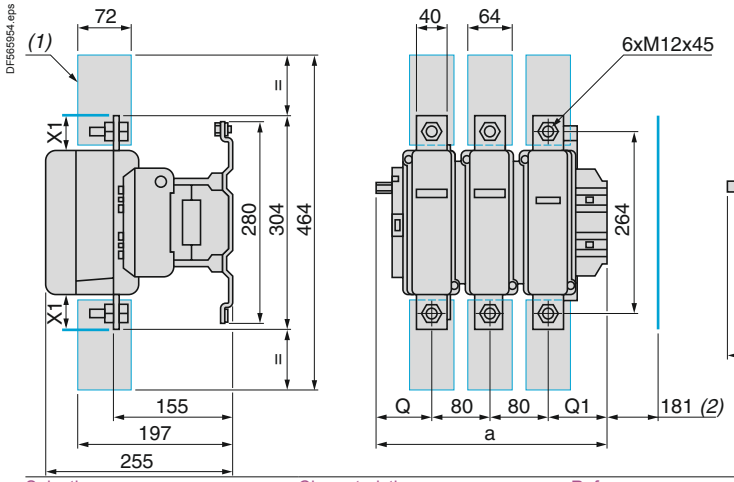

CR1 F630	3P	4P
a	309	389
G supplied	180	240
G min.	100	150
G max.	195	275
J1	61	81
Q	60	60
Q1	89	89

X1: Min. electrical clearance according to operational voltage and breaking capacity.

Voltage in V	X1
200…500	20
690…1000	30

(1) Power terminal protection shroud.
(2) Minimum distance required for coil removal.

Selection:
pages B9/87 to B9/91

Characteristics:
pages B9/92 to B9/95

References:
pages B9/7, B9/30 to B9/35

TeSys contactors
TeSys CR1 F magnetic latching contactors

TeSys CR1 F

CR1 F150…F265

Panel mounted

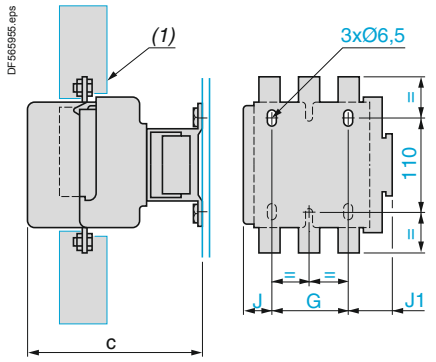

CR1		F150	F185	F265
c	3P	171	181	213
	4P	171	181	213
G	3P	80	80	96
	4P	80	80	96
J	3P	26.5	29	44.5
	4P	45	49	68.5
J1	3P	57	59.5	61.5
	4P	75.5	79.5	85.5

On pre-slotted mounting plate AM1 PA, PB, PC

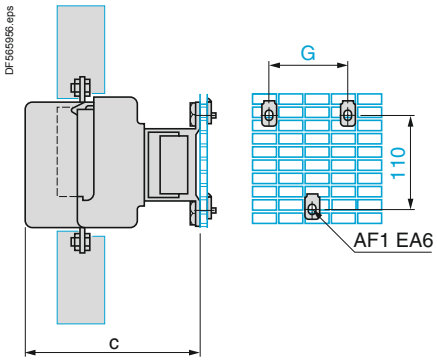

CR1		F150	F185	F265
c	3P	171	181	213
	4P	171	181	213
G	3P	80	80	96
	4P	80	80	96

On rails DZ5 MB on 120 mm centres

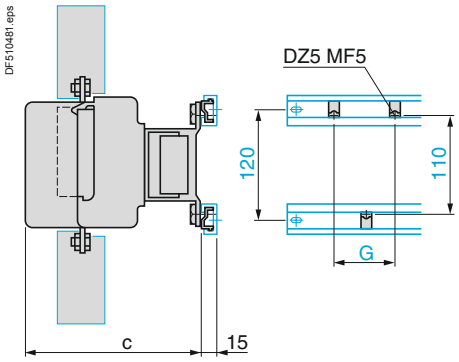

CR1		F150	F185	F265
c	3P	171	181	213
	4P	171	181	213
G	3P	80	80	96
	4P	80	80	96

(1) Power terminal protection shroud (see page B9/14).

CR1 F150…F650

On 2 notched uprights AM1 EC●●●

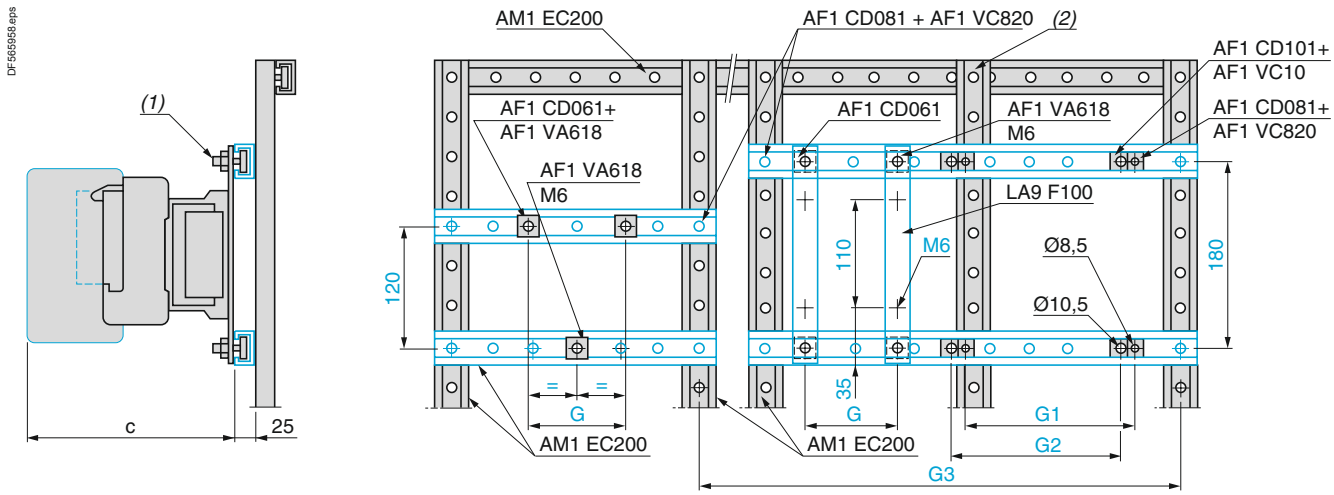

CR1		F150	F185	F265	F400	F500	F630
c	3P	171	181	213	213	226	250
	4P	171	181	213	213	226	250
G (M6)	3P	80	80	96	–	–	–
	4P	80	80	96	–	–	–
G1 (Ø8,5)	3P	–	–	–	80	80	–
	4P	–	–	–	80	140	–
G2 (Ø10,5)	3P	–	–	–	–	–	180
	4P	–	–	–	–	–	240

(1) AF1 CD●●● or AF1 VA●●●.
(2) This AM1 EC200 upright is required when G2 or G3 is greater than 700 mm (please consult your Regional Sales Office).

High power contactors

Selection: pages B9/87 to B9/91
Characteristics: pages B9/92 to B9/95
References: pages B9/7, B9/30 to B9/35

TeSys contactors
TeSys CR1 F magnetic latching contactors

TeSys CR1 F

Reversing contactors 2 x CR1 F150…F265

Horizontally mounted

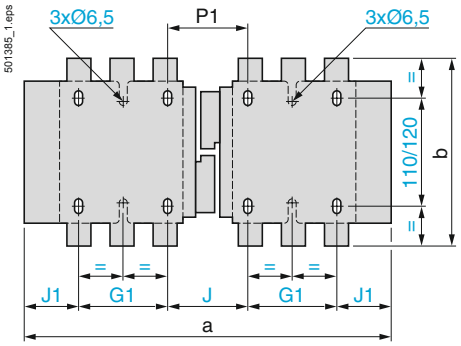

Reversing contactors 2 x CR1 F400…F630

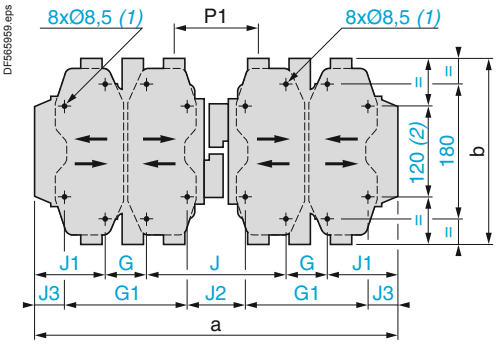

2 x **CR1**		**F150**	**F185**	**F265**
a	3P	345	357	425
	4P	422	437	521
b	3P	170	174	203
	4P	170	174	203
G1	3P	80	80	96
	4P	80	80	96
J	3P	71	78	109
	4P	111	118	157
J1	3P	57	59.5	61.5
	4P	75.5	79.5	85.5
P1	3P	71	78	100
	4P	71	78	100

2 x **CR1**		**F400**	**F500**	**F630**
a	3P	446	485	636
	4P	542	595	796
b	3P	206	238	304
	4P	206	238	304
G	3P	80	80	180
	4P	80	140	240
G1	3P	170	170	–
	4P	170	230	–
J	3P	157	156	139
	4P	157	156	139
J1	3P	64.5	84.5	68.5
	4P	112.5	79.5	68.5
J2	3P	67	66	–
	4P	67	66	–
J3	3P	19.5	39.5	–
	4P	67.5	34.5	–
P1	3P	107	112	137
	4P	107	112	137

(1) Except F630: 4 x Ø 10.5.
(2) Except F630: 180.

Selection:
pages B9/87 to B9/91

Characteristics:
pages B9/92 to B9/95

References:
pages B9/7, B9/30 to B9/35

TeSys contactors
TeSys CR1 F magnetic latching contactors

TeSys CR1 F

Reversing contactors

Vertically mounted with mechanical interlock **LA9 F●●●**.
2 contactors **CR1 F** of identical or different ratings (CR1 F150…F630), see pages B9/81 and B9/81.

Assembly A

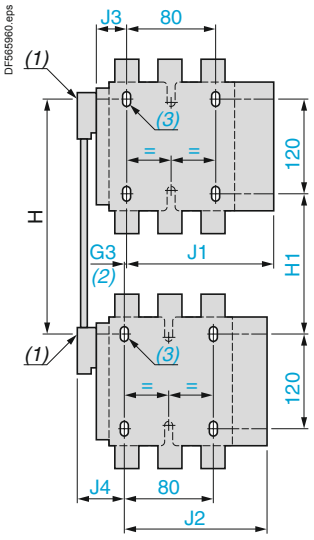

Assembly B

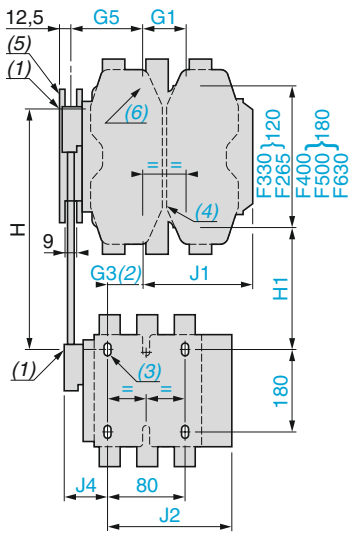

Assembly C

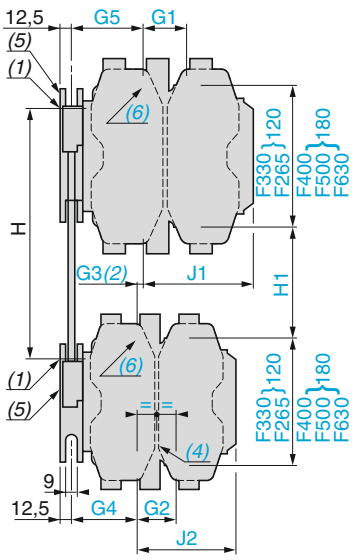

(1) Mechanical interlock shaft.
(2) For assembly of contactors of different ratings only.
(3) 3 x Ø6.5 mm for CR1 F150…F265.
(4) 3 x Ø6.5 mm for CR1 F265.
(5) Mechanical interlock guide bracket.
(6) 4 x Ø8.5 mm for CR1 F400, F500 or 4 x Ø10.5 mm.

Assembly type LA9 F		A			B								C								
		F4F	G4F	G4G	H4F	J4F	K4F	L4F	H4G	J4G	K4G	L4G	H4H	J4H	K4H	L4H	J4J	K4J	L4J	K4K	L4K	L4L
G1	3P	–	–	–	96	80	80	180	96	80	80	180	96	80	80	180	80	80	180	80	180	180
	4P	–	–	–	96	80	140	240	96	80	140	240	96	80	140	240	80	140	240	140	240	240
G2	3P	–	–	–	–	–	–	–	–	–	–	–	96	96	96	96	80	80	80	80	80	180
	4P	–	–	–	–	–	–	–	–	–	–	–	96	96	96	96	80	80	80	140	140	240
G3	3P	0	3	0	21	45	45	35	19	42	42	33	0	23	23	14	0	0	9 (7)	0	9 (7)	0
	4P	0	4	0	27	26	26	17	23	22	22	13	0	0	0	9 (7)	0	0	9 (7)	0	9 (7)	0
G4	3P	–	–	–	–	–	–	–	–	–	–	–	60	60	60	60	83	83	83	83	83	74
	4P	–	–	–	–	–	–	–	–	–	–	–	83	83	83	83	83	83	83	83	83	74
G5	3P	–	–	–	60	83	83	74	60	83	83	74	60	83	83	74	83	83	74	83	74	74
	4P	–	–	–	83	83	83	74	83	83	83	74	83	83	83	74	83	83	74	83	74	74
H	min.	200	210	220	240	250	270	310	250	250	270	310	250	260	280	330	260	280	325	300	345	380
	max.	310	300	310	380	380	380	380	380	380	380	380	380	380	380	380	380	380	380	380	380	380
H1	min.	80	90	100	110	80	100	140	120	90	110	150	130	110	130	170	60	100	140	120	160	200
	max.	190	180	190	250	210	210	210	250	220	220	220	260	230	230	220	200	200	195	200	195	200
J1	3P	133	134	134	149.5	137	157	241	149.5	137	157	241	149.5	137	157	24	137	157	241	157	244	241
	4P	145	146	146	164.5	185	212	321	164.5	185	212	321	164.5	185	212	321	185	212	321	212	321	321
J2	3P	133	133	134	183	133	183	133	134	134	134	134	142.5	149.5	149.5	149.5	137	137	137	157	157	241
	4P	145	145	146	145	145	145	145	146	146	146	146	164.5	164.5	164.5	164.5	185	185	185	212	212	312
J3	3P	48.5	53	53	–	–	–	–	–	–	–	–	–	–	–	–	–	–	–	–	–	–
	4P	67	73	73	–	–	–	–	–	–	–	–	–	–	–	–	–	–	–	–	–	–
J4	3P	48.5	54	53	48.5	48.5	48.5	48.5	53	53	53	53	–	–	–	–	–	–	–	–	–	–
	4P	67	69	73	67	67	67	67	73	73	73	73	–	–	–	–	–	–	–	–	–	–

(7) In this case, G4 is greater than G5.

High power contactors

TeSys contactors

TeSys F reversing contactors and changeover contactor pairs

Horizontally mounted

Pre-assembled

LC2 F115 to F265 (reverser supplied on 2 bars which can be used for fixing the device)

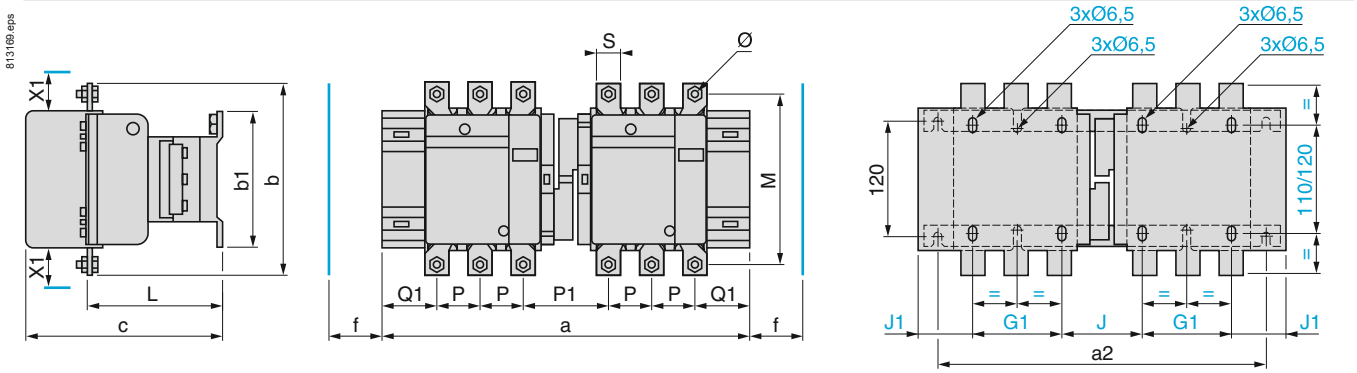

f - Minimum distance required for coil removal.

Bar fixing centres
Vertical: 120 mm
Horizontal: a2 see table

X1 (mm) = Minimum electrical clearance according to operating voltage and breaking capacity.

LC1	200…500 V	660…1000 V
F115, F150	10	15
F185	10	15
F225, F265	10	15

LC2		a	a2	b	b1	c	G1	J	J1	L	M	P	P1	Q1	S	f	Ø
F115	3P	345	317	162	137	171	80	71	57	107	147	37	77	60	20	131	M6
	4P	419	378	162	137	171	80	108	75.5	107	147	37	77	60	20	131	M6
F150	3P	345	317	170	137	171	80	71	57	107	150	40	71	57	20	131	M8
	4P	422	381	170	137	171	80	111	75.5	107	150	40	71	55.5	20	131	M8
F185	3P	357	326	174	137	181	80	78	59.5	113.5	154	40	78	59.5	20	130	M8
	4P	437	390	174	137	181	80	118	79.5	113.5	154	40	78	59.5	20	130	M8
F225	3P	357	326	197	137	181	80	78	59.5	113.5	172	48	62	51.5	25	130	M10
	4P	437	390	197	137	181	80	118	79.5	113.5	172	48	54	47.5	25	130	M10
F265	3P	425	386	203	145	213	96	109	61.5	141	178	48	100	66.5	25	147	M10
	4P	521	464	203	145	213	96	157	85.5	141	178	48	100	66.5	25	147	M10

Selection:
pages A6/23 to A6/47

References:
pages B9/36 to B9/41

Schemes:
page B9/103

TeSys contactors

TeSys F reversing contactors and changeover contactor pairs

Horizontally mounted

For customer assembly, fixing recommended on AM1 EC uprights, please consult your Regional Sales Office.

2 x **LC1 F115 to F330**

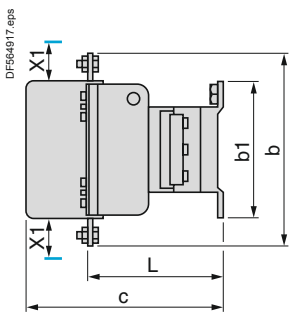

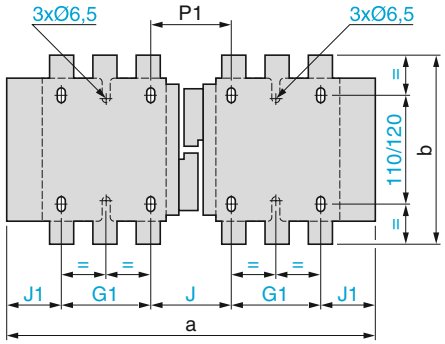

2 x **LC1 F400, F500, F630, F800**

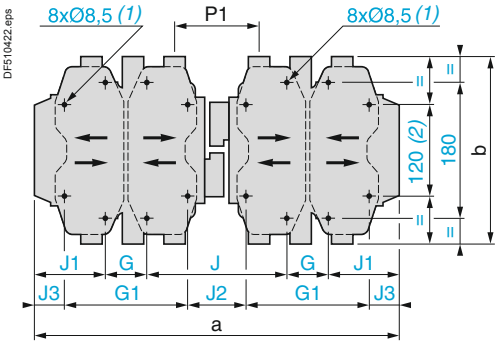

X1 (mm) = Minimum electrical clearance according to operating voltage and breaking capacity.

LC1	200…500 V	660…1000 V	200…690 V	1000 V
F115, F150	10	15	–	–
F185	10	15	–	–
F225, F265	10	15	–	–
F330	10	15	–	–
F400	15	20	–	–
F500	15	20	–	–
F630	20	30	–	–
F800	–	–	10	20

2 x LC1		a	b	b1	c	G	G1	J	J1	J2	J3	L	P1
F115	3P	345	162	137	171	–	80	71	57	–	–	107	77
	4P	419	162	137	171	–	80	108	75.5	–	–	107	77
F150	3P	345	170	137	171	–	80	71	57	–	–	107	71
	4P	422	170	137	171	–	80	111	75.5	–	–	107	71
F185	3P	357	174	137	181	–	80	78	59.5	–	–	113.5	78
	4P	437	174	137	181	–	80	118	79.5	–	–	113.5	78
F225	3P	357	197	137	181	–	80	78	59.5	–	–	113.5	62
	4P	437	197	137	181	–	80	118	79.5	–	–	113.5	54
F265	3P	425	203	145	213	–	96	109	61.5	–	–	141	100
	4P	521	203	145	213	–	96	157	85.5	–	–	141	100
F330	3P	447	206	145	219	–	96	124	65.5	–	–	145	107
	4P	543	206	145	219	–	96	172	89.5	–	–	145	107
F400	3P	446	206	209	219	80	170	157	64.5	67	19.5	145	107
	4P	542	206	209	219	80	170	157	112.5	67	67.5	145	107
F500	3P	485	238	209	232	80	170	156	84.5	66	39.5	146	112
	4P	595	238	209	232	140	230	156	79.5	66	34.5	146	112
F630	3P	636	304	280	255	180	–	139	68.5	–	–	155	137
	4P	796	304	280	255	240	–	139	88.5	–	–	155	137
F800	3P	636	304	280	255	180	–	139	68.5	–	–	155	137

(1) Except LC1 F630 and F800: 4 x Ø10.5.
(2) Except LC1 F630 and F800.

For other dimensions: see pages B9/54 and B9/55.

TeSys contactors

TeSys F reversing contactors and changeover contactor pairs

Vertically mounted

For customer assembly, with mechanical interlock (MI) **LA9 F**, fixing recommended on AM1 EC uprights (please consult your Regional Sales Office). 2 x **LC1** identical or different ratings (**LC1 F115 to F630 and F800**). See pages B9/36 to B9/39.

Assembly A

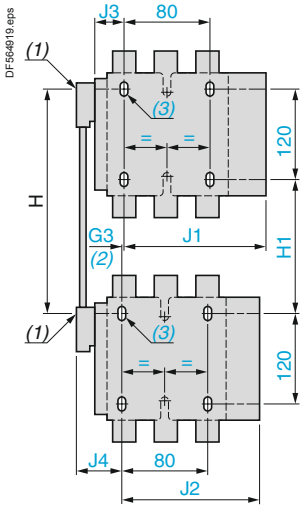

Assembly B

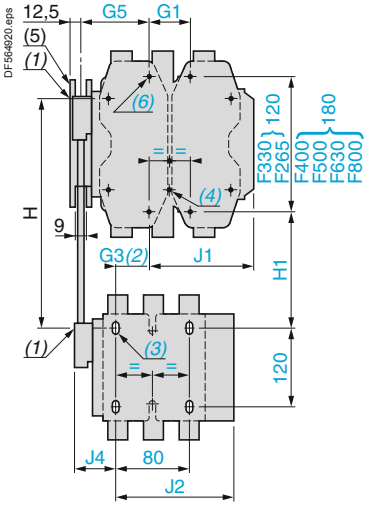

Assembly C

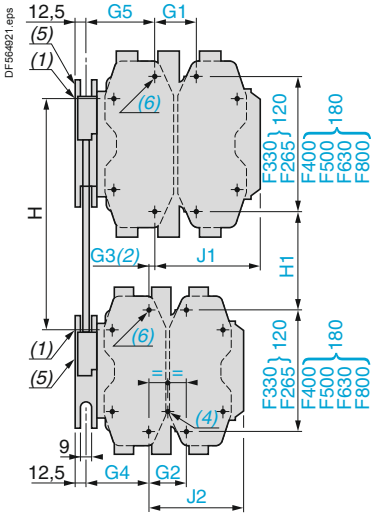

(1) *Mechanical interlock shaft.*
(2) For assembly of contactors of different ratings only.
(3) 4 x Ø6.5 for LC1 F115 to F225.

(4) 4 x Ø6.5 for LC1 F265.
(5) *Mechanical interlock guide bracket.*

(6) 4 x Ø8.5 for LC1 F400, F500 or 4 x Ø10.5 for LC1 F630 and F800.

Assembly A (7) - Mechanical interlock reference

	G3 3P	G3 4P	H min.	H max.	H1 min.	H1 max.	J1 3P	J1 4P
LA9 FF4F	0	0	200	310	80	190	137	155.5
LA9 FG4F	3	4	210	300	90	180	139.5	159.5
LA9 FG4G	0	0	220	310	100	190	139.5	159.5

	J2 3P	J2 4P	J3 3P	J3 4P	J4 3P	J4 4P
LA9 FF4F	137	155.5	48.5	67	48.5	67
LA9 FG4F	137	155.5	53	73	54	69
LA9 FG4G	139.5	159.5	53	73	53	73

For customer assembly, fixing recommended on AM1 EC uprights, please consult your Regional Sales Office.
2 x **LC1 F780**

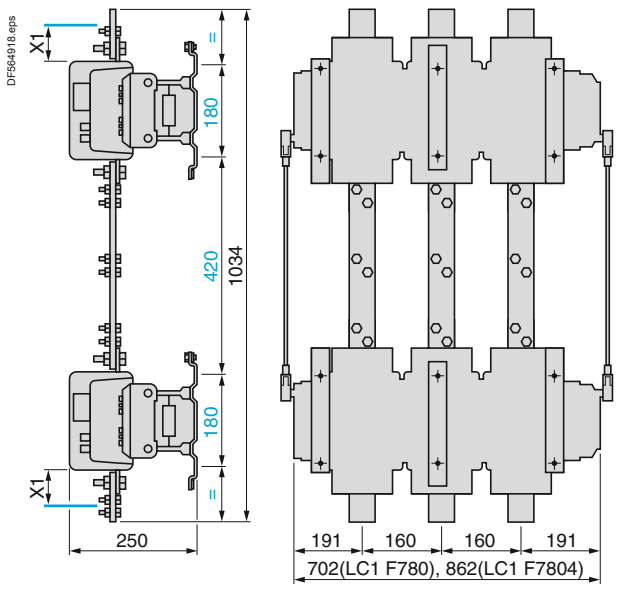

X1 and fixings, see page B9/84.

(7) *Only 3P for F800.*
(8) In this case, G4 is greater than G5.

Assembly B (7) - Mechanical interlock reference

	G1 3P	G1 4P	G3 3P	G3 4P	G5 3P	G5 4P	H min.	H max.
LA9 FH4F	96	96	21	27	60	83	240	380
LA9 FJ4F	80	80	45	26	83	83	250	380
LA9 FK4F	80	140	45	26	83	83	270	380
LA9 FL4F	180	240	35	17	74	74	310	380
LA9 FH4G	96	96	19	23	60	83	250	380
LA9 FJ4G	80	80	42	22	83	83	250	380
LA9 FK4G	80	140	42	22	83	83	270	380
LA9 FL4G	180	240	33	13	74	74	310	380

	H1 min.	H1 max.	J1 3P	J1 4P	J2 3P	J2 4P	J4 3P	J4 4P
LA9 FH4F	110	250	157.5	181.5	137	155.5	48.5	67
LA9 FJ4F	80	210	144.5	192.5	137	155.5	48.5	67
LA9 FK4F	100	210	164.5	219.5	137	155.5	48.5	67
LA9 FL4F	140	210	248.5	328.5	137	155.5	48.5	67
LA9 FH4G	120	250	157.5	181.5	139.5	159.5	53	73
LA9 FJ4G	90	220	144.5	192.5	139.5	159.5	53	73
LA9 FK4G	110	220	164.5	219.5	139.5	159.5	53	73
LA9 FL4G	150	220	248.5	328.5	139.5	159.5	53	73

Assembly C (7)

	G1 3P	G1 4P	G2 3P	G2 4P	G3 3P	G3 4P	G4 3P	G4 4P	G5 3P	G5 4P
LA9 FH4H	96	96	96	96	0	0	60	83	60	83
LA9 FJ4H	80	80	96	96	23	0	60	83	83	83
LA9 FK4H	80	140	96	96	23	0	60	83	83	83
LA9 FL4H	180	240	96	96	14	9 (8)	60	83	74	74
LA9 FJ4J	80	80	80	80	0	0	83	83	83	83
LA9 FK4J	80	140	80	80	0	0	83	83	83	83
LA9 FL4J	180	240	80	80	9 (8)	9 (8)	83	83	74	74
LA9 FK4K	80	140	80	140	0	0	83	83	83	83
LA9 FL4K	180	240	80	140	9 (8)	9 (8)	83	83	74	74
LA9 FL4L	180	240	180	240	0	0	74	74	74	74

	H min.	H max.	H1 min.	H1 max.	J1 3P	J1 4P	J2 3P	J2 4P
LA9 FH4H	250	380	130	260	157.5	181.5	157.5	181.5
LA9 FJ4H	260	380	110	230	144.5	192.5	157.5	181.5
LA9 FK4H	280	380	130	230	164.5	219.5	157.5	181.5
LA9 FL4H	330	380	170	220	248.5	328.5	157.5	181.5
LA9 FJ4J	260	380	60	200	144.5	192.5	144.5	192.5
LA9 FK4J	280	380	100	200	164.5	219.5	144.5	192.5
LA9 FL4J	325	380	140	195	248.5	329.5	144.5	192.5
LA9 FK4K	300	380	120	200	164.5	329.5	164.5	219.5
LA9 FL4K	345	380	160	195	248.5	328.5	164.5	219.5
LA9 FL4L	380	380	200	200	248.5	328.5	248.5	328.5

Selection:
pages A6/23 to A6/47

References:
pages B9/36 to B9/41

Schemes:
page B9/103

TeSys contactors

TeSys F reversing contactors and changeover contactor pairs

Reversing contactors for motor control LC2 F

2 x **LC1 F**

Horizontally mounted

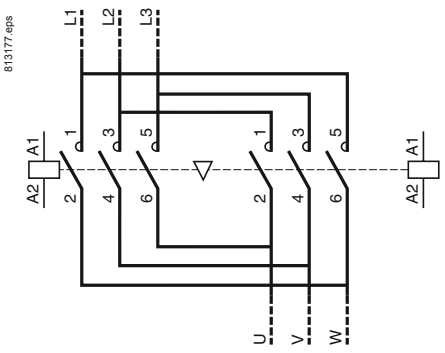

2 x **LC1 F**

Vertically mounted

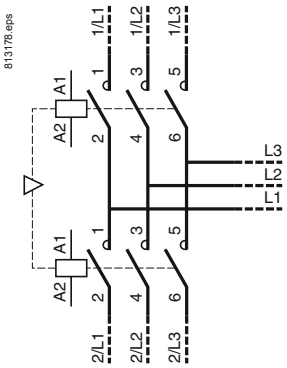

Changeover contactor pairs for distribution LC2 F

2 x **LC1 F**

Horizontally mounted

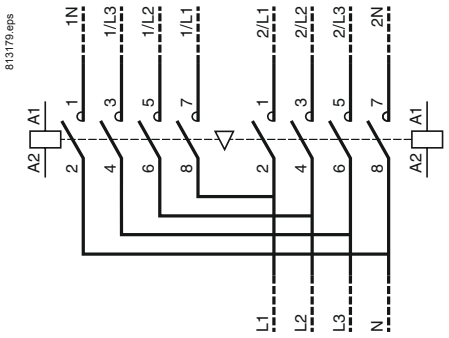

2 x **LC1 F**

Vertically mounted

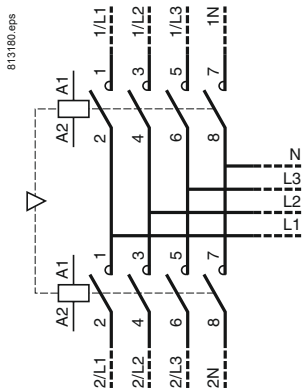

Electrical interlocking of reversers fitted with mechanical interlock without integral electrical contacts

LA9 F

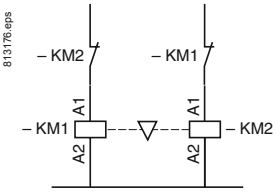

High power contactors

TeSys contactors

High power changeover contactor pairs for distribution

TeSys F

Dimensions

Contactors used to assemble high power changeover contactor pairs LC1 F780: see page B9/43

Common side view

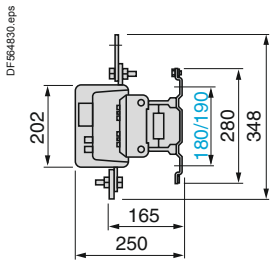

LC1 F6309

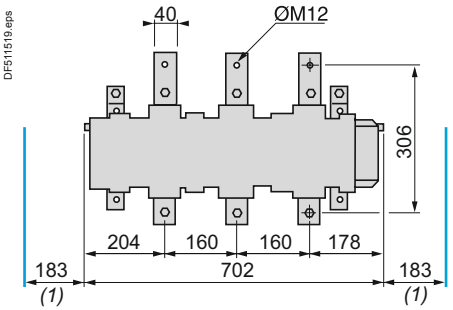

LC1 F63049

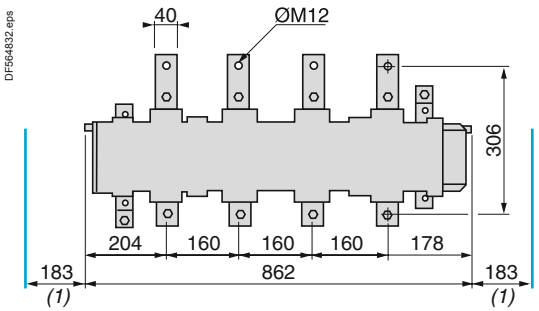

Common side view

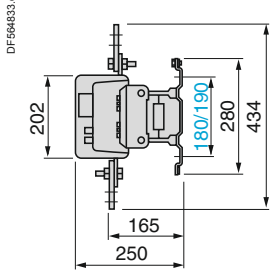

LC1 F78040

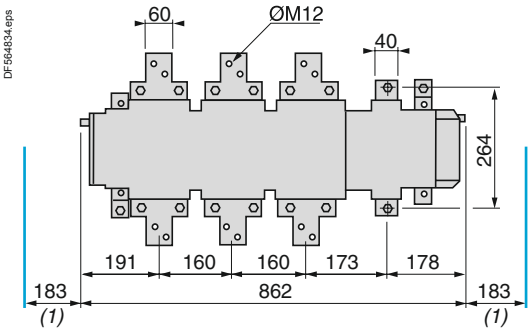

LC1 F78041

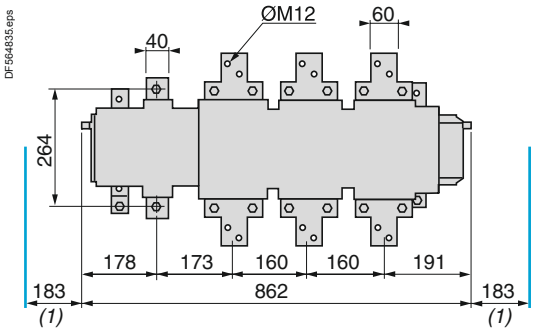

(1) Minimum distance required for removal of each coil.

3-phase changeover contactor pairs

LC1 F780 + LC1 F780 + LA9 FX970: see page B9/43
LC1 F780 + LC1 F6309 + LA9 FX970

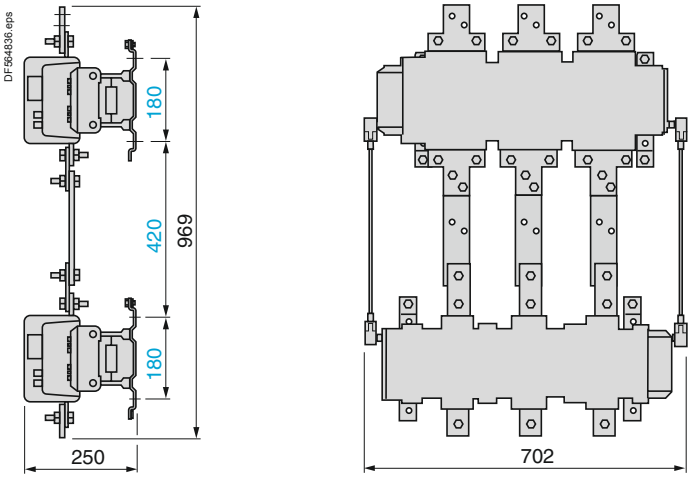

References:
page B9/43

TeSys contactors

High power changeover contactor pairs for distribution

TeSys F

Dimensions

3-phase + neutral changeover contactor pairs

LC1 F78041 + LC1 F63049 + LA9 FX970

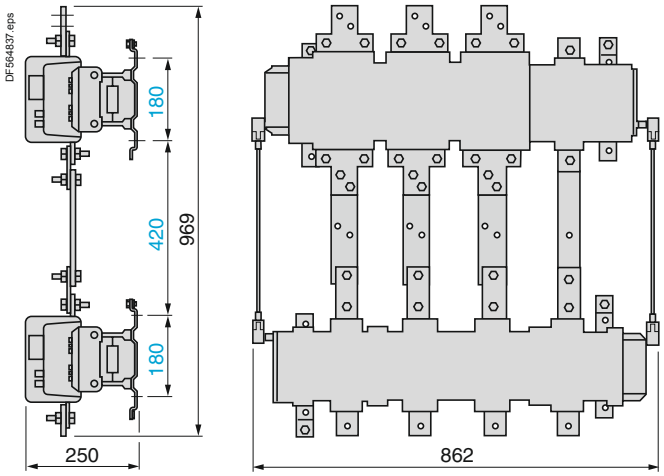

LC1 F78041 + LC1 F78040 + LA9 FX970

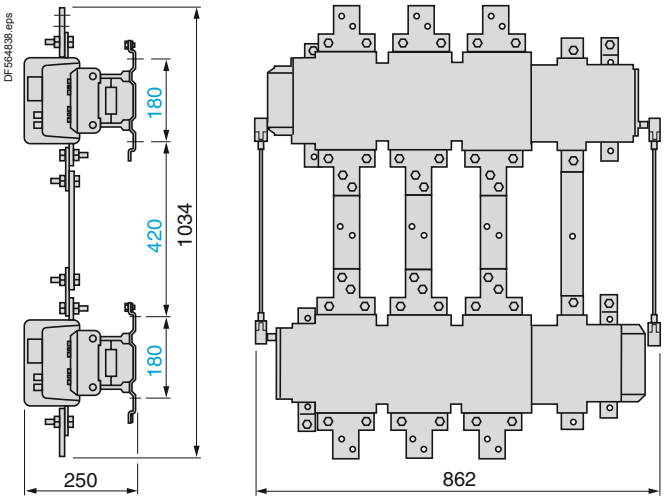

LC1 F7804 + LC1 F63049 + LA9 FX971

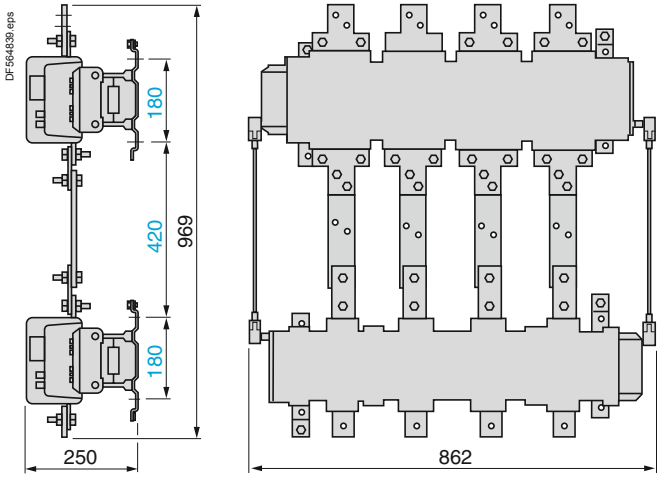

LC1 F7804 + LC1 F7804 + LA9 FX971

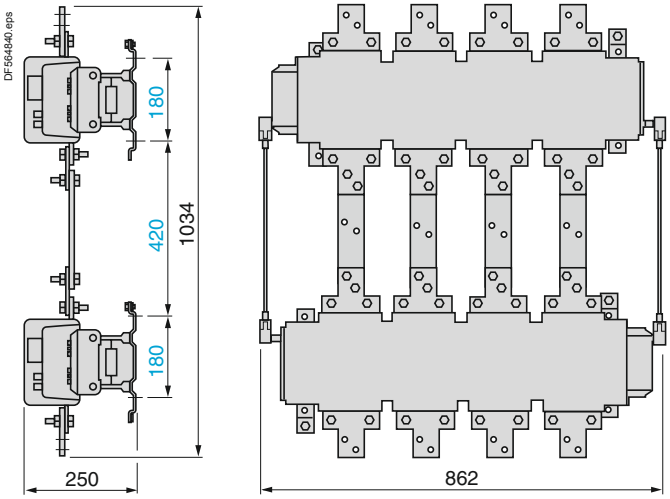

Schemes

3-phase changeover contactor pairs

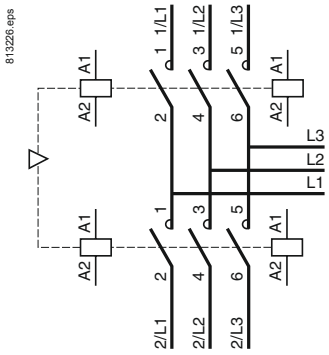

3-phase + neutral changeover contactor pairs

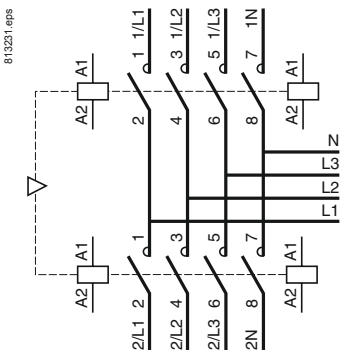

References:
page B9/43

Bar mounted contactors
TeSys B

Pre defined composition contactors – TeSys B

Type of product	Range		Pages
High performance & power - 1000 V TeSys LC1B	From **750** to **1800** A - **AC-3** From **800** to **2750** A - **AC-1**	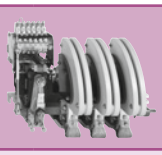	B10/2
Magnetic latching - 1000 V TeSys CR1B	From **750** to **1800** A - **AC-3** From **800** to **2750** A - **AC-1**	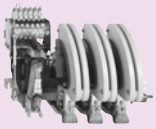	B10/10
For control of DC excitation circuit of synchronous motors - 1200 V DC TeSys CRXB, CVXB, CWXB	From **80** to **2750** A - **DC**	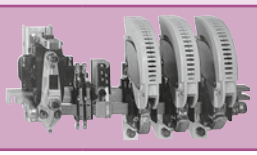	B10/13

Variable composition contactors – TeSys B

Standard - 690 V TeSys CV1B Composition to be defined by customer	From **80** to **700** A - **AC-3** From **80** to **1000** A - **AC-1**	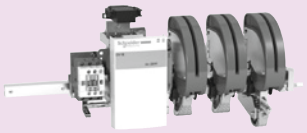	B10/16
High performance - 1000 V TeSys CV3B Composition to be defined by customer	From **80** to **1800** A - **AC-3** From **80** to **2750** A - **AC-1**	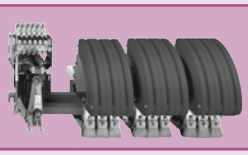	B10/17
Variable composition contactors - ordering process			B10/18

All details and composition list in the TeSys B dedicated catalogue >



Catalogue ref:
DIAED2070702EN

Free download on the web

On request – TeSys B

For induction heating applications - 3000 V TeSys B	From **80** to **16300** A - **AC-1**	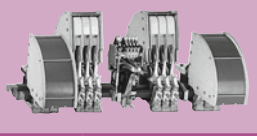	On request

Technical Data for Designers B10/23

TeSys contactors
TeSys LC1B contactors

TeSys B

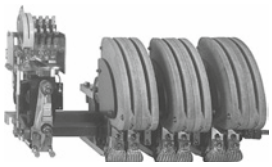
DF522612R.eps

LC1 BP33

Contactors for motor control in category AC-3, from 750 to 1800 A (~ or ⎓)

3-pole contactors

Standard power ratings of 3-phase motors 50-60 Hz in category AC-3							Rated operational current in AC-3 440V up to	Instantaneous auxiliary contacts		Basic reference, to be completed by adding the voltage code (1)	Weight
220 V 230 V	380 V 400 V	415 V	440 V	500 V	660 V 690 V	1000 V					
kW	kW	kW	kW	kW	kW	kW	A				kg
220	400	425	450	500	560	530	750	2	2	**LC1BL33●22**	58.000
								3	1	**LC1BL33●31**	58.000
								1	3	**LC1BL33●13**	58.000
								4	–	**LC1BL33●40**	58.000
280	500	530	560	600	670	530	1000	2	2	**LC1BM33●22**	57.000
								3	1	**LC1BM33●31**	57.000
								1	3	**LC1BM33●13**	57.000
								4	–	**LC1BM33●40**	57.000
425	750	800	800	700	750	670	1500	2	2	**LC1BP33●22**	94.000
								3	1	**LC1BP33●31**	94.000
								1	3	**LC1BP33●13**	94.000
								4	–	**LC1BP33●40**	94.000
500	900	900	900	900	900	750	1800	2	2	**LC1BR33●22**	129.000
								3	1	**LC1BR33●31**	129.000
								1	3	**LC1BR33●13**	129.000
								4	–	**LC1BR33●40**	129.000

Contactors for control in category AC-1, from 800 to 2750 A (~ or ⎓)

Single, 2, 3 or 4-pole contactors

Maximum operational current in AC-1 (θ ≤ 40 °C)	Number of poles	Instantaneous auxiliary contacts		Basic reference, to be completed by adding the voltage code (1)	Weight
A					kg
800	1	2	2	**LC1BL31●22**	32.000
		3	1	**LC1BL31●31**	32.000
		1	3	**LC1BL31●13**	32.000
		4	–	**LC1BL31●40**	32.000
	2	2	2	**LC1BL32●22**	45.000
		3	1	**LC1BL32●31**	45.000
		1	3	**LC1BL32●13**	45.000
		4	–	**LC1BL32●40**	45.000
	3	2	2	**LC1BL33●22**	58.000
		3	1	**LC1BL33●31**	58.000
		1	3	**LC1BL33●13**	58.000
		4	–	**LC1BL33●40**	58.000
	4	2	2	**LC1BL34●22**	72.000
		3	1	**LC1BL34●31**	72.000
		1	3	**LC1BL34●13**	72.000
		4	–	**LC1BL34●40**	72.000

(1) Standard control circuit voltages (for other voltages, please consult your Regional Sales Office):

Volts	48	110	120	125	127	220	230	240	380	400	415	440	500
~ 50…400 Hz	–	F	K	–	G	M	P	U	Q	V	N	R	S
⎓	ED	FD	–	GD	–	MD	–	UD	–	–	–	RD	SD

*For voltages other than those indicated above, replace the p in the reference with the the operational voltage (3 figures) and the type of current (2 letters: **AC** for a.c. supply and **DC** for d.c. supply). Example: 82 V d.c., the reference becomes LC1 BP33**082DC**22.*
For coil characteristics, see pages B10/6 to B10/9.

Selection: pages A6/23 to A6/47
Characteristics: pages B10/24 and B10/25
Dimensions and schemes: pages B10/26 and B10/27

TeSys contactors
TeSys LC1B contactors

TeSys B

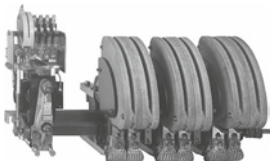

LC1 BP33

Contactors for control in category AC-1, from 800 to 2750 A (~ or ⎓)

Single, 2, 3 or 4-pole contactors

Maximum operational current in AC-1 (θ ≤ 40 °C)	Number of poles	Instantaneous auxiliary contacts		Basic reference, to be completed by adding the voltage code (1)	Weight
A					kg
1250	1	2	2	**LC1BM31●22**	31.000
		3	1	**LC1BM31●31**	31.000
		1	3	**LC1BM31●13**	31.000
		4	–	**LC1BM31●40**	31.000
	2	2	2	**LC1BM32●22**	44.000
		3	1	**LC1BM32●31**	44.000
		1	3	**LC1BM32●13**	44.000
		4	–	**LC1BM32●40**	44.000
	3	2	2	**LC1BM33●22**	57.000
		3	1	**LC1BM33●31**	57.000
		1	3	**LC1BM33●13**	57.000
		4	–	**LC1BM33●40**	57.000
	4	2	2	**LC1BM34●22**	71.000
		3	1	**LC1BM34●31**	71.000
		1	3	**LC1BM34●13**	71.000
		4	–	**LC1BM34●40**	71.000
2000	1	2	2	**LC1BP31●22**	41.000
		3	1	**LC1BP31●31**	41.000
		1	3	**LC1BP31●13**	41.000
		4	–	**LC1BP31●40**	41.000
	2	2	2	**LC1BP32●22**	65.000
		3	1	**LC1BP32●31**	65.000
		1	3	**LC1BP32●13**	65.000
		4	–	**LC1BP32●40**	65.000
	3	2	2	**LC1BP33●22**	94.000
		3	1	**LC1BP33●31**	94.000
		1	3	**LC1BP33●13**	94.000
		4	–	**LC1BP33●40**	94.000
	4	2	2	**LC1BP34●22**	120.000
		3	1	**LC1BP34●31**	120.000
		1	3	**LC1BP34●13**	120.000
		4	–	**LC1BP34●40**	120.000
2750	1	2	2	**LC1BR31●22**	52.000
		3	1	**LC1BR31●31**	52.000
		1	3	**LC1BR31●13**	52.000
		4	–	**LC1BR31●40**	52.000
	2	2	2	**LC1BR32●22**	85.000
		3	1	**LC1BR32●31**	85.000
		1	3	**LC1BR32●13**	85.000
		4	–	**LC1BR32●40**	85.000
	3	2	2	**LC1BR33●22**	129.000
		3	1	**LC1BR33●31**	129.000
		1	3	**LC1BR33●13**	129.000
		4	–	**LC1BR33●40**	129.000
	4	2	2	**LC1BR34●22**	160.000
		3	1	**LC1BR34●31**	160.000
		1	3	**LC1BR34●13**	160.000
		4	–	**LC1BR34●40**	160.000

(1) See previous page.

TeSys contactors

TeSys LC1 B contactors

Accessories and spare parts

TeSys B

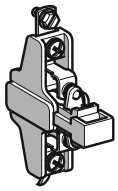

ZC4 GM1

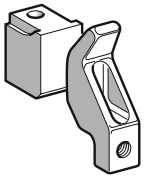

PA1 LB80
(PA1 LB76 + PA1 LB75)

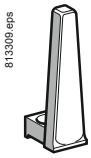

PA1 LB89

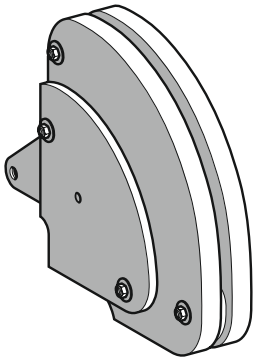

PA1 LB50

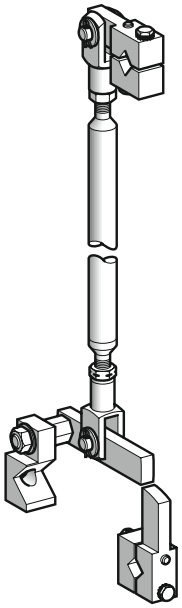

EZ2 LB0601

Spare parts

Description	For contactor	Composition	Reference	Weight kg
Instantaneous auxiliary contact blocks	LC1 B	1 N/O	**ZC4GM1**	0.030
		1 N/C	**ZC4GM2**	0.030

Description	For contactor	Number of sets required per contactor pole	Set reference	Weight kg
Set of contacts (1 moving contact, 1 fixed contact)	LC1 BL	1	**PA1LB80**	0.420
	LC1 BM	1	**PA1LB80**	0.420
	LC1 BP	2	**PA1LB80**	0.420
	LC1 BR	3	**PA1LB80**	0.420

Description	For contactor	Reference	Weight kg
Moving contact only (for 1 finger)	LC1 B	**PA1LB75**	0.220
Fixed contact only (for 1 finger)	LC1 B	**PA1LB76**	0.200
Blow-out horn only (for 1 finger)	LC1 B	**PA1LB89**	0.120
Arc chamber (for 1 contactor pole)	LC1 BL	**PA1LB50**	3.700
	LC1 BM	**PA1LB50**	3.700
	LC1 BP	**PA1PB50**	6.200
	LC1 BR	**PA1RB50**	8.500

Mounting accessories

Description	For contactor	Sold in lots of	Unit reference	Weight kg
Bar support bracket for mounting on 120 or 150 mm centres	LC1 BL to BR	2	**LA9B103**	1.620

Assembly of two vertically mounted contactors by the customer

Description	For contactor	Reference	Weight kg
Mechanical interlock and locking device components	LC1 B	**EZ2LB0601**	1.280

Specifications

- Positive mechanical interlock between two vertically mounted contactors of the same or different ratings.
- Connecting rod with cranks mounted on the right-hand, pole side.
- Vertical fixing centres of the two contactors: 600 mm.

Description	Specification	Height mm	Sold in lots of	Unit reference	Weight kg
Notched mounting rails used as uprights and as equipment support	2 mm steel, with zinc chromate treatment	1650	4	**AM1EC165**	2.460
		1850	4	**AM1EC185**	2.760
		2000	4	**AM1EC200**	2.980
1/4 turn sliding clip nut and corresponding screw for assembly of rails AM1 EC	M8	–	10	**AF1CD081**	0.020
	M8 x 18	–	10	**AF1VC820**	0.024

Selection: pages A6/23 to A6/47
Characteristics: pages B10/24 and B10/25
Dimensions and schemes: pages B10/26 and B10/27

TeSys B

Electromagnet

Electromagnet EB5 KB50

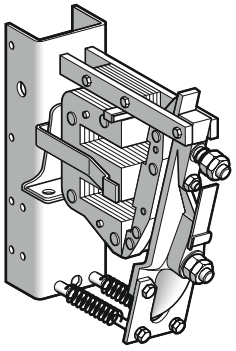

Adjustment of pick-up travel and pull-in travel

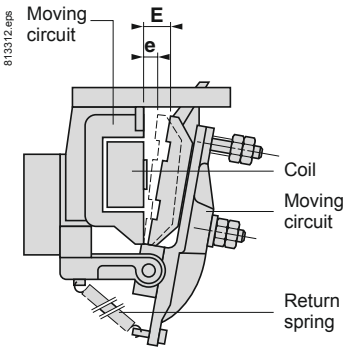

Poles

Complete pole

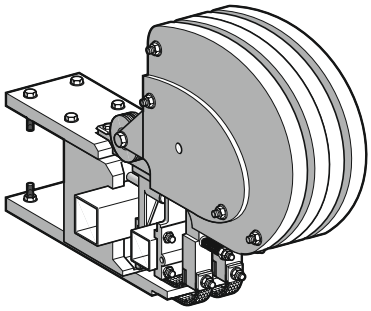

N/O pole

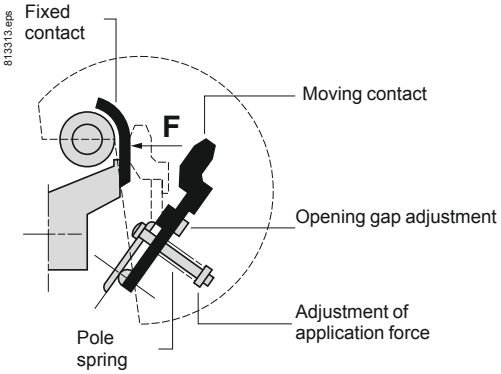

⎓ or ∿ supply adjustment characteristics with economy resistor (and rectifier on ∿)

Contactor type			LC1 BL	LC1 BM	LC1 BP	LC1 BR
Electromagnet			EB5 KB50	EB5 KB50	EB5 KB50	EB5 KB50
	Pick-up travel (**E**)	**mm**	30	30	30	30
	Pull-in travel (**e**)	**mm**	10	10	10	10
Coil			WB1KB●●●	WB1KB●●●	WB1KB●●●	WB1KB●●●
	Pull-in voltage	**V**	0.75 Uc	0.75 Uc	0.75 Uc	0.75 Uc
	Drop-out voltage	**V**	0.3…0.5 Uc	0.3…0.5 Uc	0.3…0.5 Uc	0.3…0.5 Uc
N/O pole Adjustment of application force (F) on the contact per pole according to contactor composition	1-pole	**daN**	30	30	30 (1)	30 (2)
	2-pole	**daN**	30	30	30 (1)	30 (2)
	3-pole	**daN**	30	30	30 (1)	30 (2)
	4-pole	**daN**	30	30	30 (1)	30 (2)

(1) Each pole has 2 contacts; the force must be applied evenly to each of these contacts.
(2) Each pole has 3 contacts; the force must be applied evenly to each of these contacts.

Bar mounted contactors

TeSys contactors

TeSys LC1 B contactors

Replacement coils and accessories for single-pole contactors

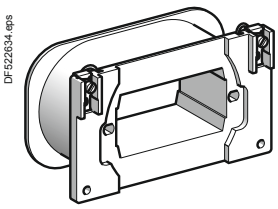

WB1 KB●●●

References

The same coils are used for ⎓ or ∿ contactor control supply.

■ For d.c. operation, the following must be associated with the coil:
□ 1 economy resistor arrangement (resistors + 1 or 2 auxiliary contact(s) or 1 contactor).

■ For 50 to 400 Hz a.c. operation, the following must be associated with the coil:
□ 1 individual rectifier (to be wired)
□ 1 economy resistor arrangement (resistors + auxiliary contact(s) or 1 contactor) wired into the rectified current side.

Operating range min-max (1)		Coil		Economy resistor				Rectifier (for ∿ only)	Coil	Weight
d.c.	a.c.	Resistance at 20 °C ±10 %	I inrush ±10 % at Un max	Resistor		Contact		Reference	Reference	
				Unit reference	Total resistance	Qty	Reference			
V	V	Ω	A		Ω					kg
47-51	–	5.1	10.3	**DR2SC0270**	270	1	**ZC4GM2**	–	**WB1KB155**	1.120
52-56	–	5.9	9.5	**DR2SC0330**	330	1	**ZC4GM2**	–	**WB1KB132**	1.120
57-64	–	7.3	8.9	**DR2SC0390**	390	1	**ZC4GM2**	–	**WB1KB123**	1.120
65-68	–	9.5	7.1	**DR2SC0560**	560	1	**ZC4GM2**	–	**WB1KB133**	1.120
69-79	–	11.6	6.9	**DR2SC0680**	680	1	**ZC4GM2**	–	**WB1KB121**	1.120
80-87	–	16.2	5.3	**DR2SC0820**	820	1	**ZC4GM2**	–	**WB1KB130**	1.120
88-94	–	19.9	4.7	**DR2SC1000**	1000	1	**ZC4GM2**	–	**WB1KB140**	1.120
95-108	110-125	25.5	4.3	**DR2SC1200**	1200	1	**ZC4GM2**	**DR5TE1U**	**WB1KB134**	1.120
109-136	126-155	33.1	4.2	**DR2SC1800**	1800	1	**ZC4GM2**	**DR5TE1U**	**WB1KB124**	1.120
137-151	156-173	50.9	3	**DR2SC2700**	2700	2	**ZC4GM2**	**DR5TE1U**	**WB1KB122**	1.120
152-166	174-191	61.36	2.7	**DR2SC3300**	3300	2	**ZC4GM2**	**DR5TE1U**	**WB1KB135**	1.120
167-189	192-216	78.4	2.4	**DR2SC3900**	3900	2	**ZC4GM2**	**DR5TE1U**	**WB1KB136**	1.120
190-221	217-256	94.8	2.3	**DR2SC4700**	4700	2	**ZC4GM2**	**DR5TE1U**	**WB1KB139**	1.120
222-243	257-280	123.9	1.9	**DR2SC6800**	6800	1	**LC1DT20LDS135**	**DR5TE1U**	**WB1KB125**	1.120
244-267	281-307	159.9	1.7	**DR2SC8200**	4700 + 3300	1	**LC1DT20LDS135**	**DR5TE1S**	**WB1KB137**	1.120
268-318	308-365	199.6	1.6	**DR2SC1001**	5600 + 4700	1	**LC1DT20UDS135**	**DR5TE1S**	**WB1KB126**	1.120
319-405	366-463	247.4	1.6	**DR2SC1201**	6800 + 5600	1	**LC1DT20TDS135**	**DR5TE1S**	**WB1KB138**	1.120
406-446	464-500	382	1.1 (2)	**DR2SC1001**	20 000	1	**LC1DT20VDS135**	**DR5TE1S**	**WB1KB127**	1.120
447-500	–	506.7	1 (3)	**DR2SC1201**	24 000	1	**LC1DT20RDS135**	–	**WB1KB128**	1.120

Specifications

■ Average coil consumption (low sealed consumption):
□ d.c.: inrush 380…520 W, sealed 0.15…0.20 W
□ a.c. (with rectifier): inrush 450…620 VA, sealed 0.15…0.20 VA
■ Time constant when sealed 25 ms
■ Economy resistor consumption: 7…10 W
■ Operating cycles/hour at θ ⩽ 55 °C: ⩽ 120
■ Mechanical durability at Uc: 1.2 million operating cycles
■ With a.c. operation: good resistance to voltage drop on inrush, non susceptibility to micro-breaks, mains harmonics: level ⩽ 7.

(1) For supply voltages of less than 110 V, beware of voltage drops caused by the inrush current.
(2) 2 resistors in series: 2 x 10000 Ω.
(3) 2 resistors in series: 2 x 12000 Ω.

TeSys contactors

TeSys LC1 B contactors

Replacement coils and accessories for 2-pole contactors

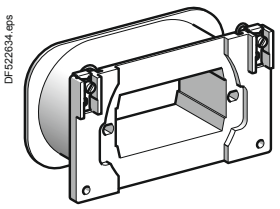

WB1 KB●●●

References

The same coils are used for ⎓ or ∿ contactor control supply.

■ For d.c. operation, the following must be associated with the coil:
□ 1 economy resistor arrangement (resistors + 1 or 2 auxiliary contact(s) or 1 contactor).

■ For 50 to 400 Hz a.c. operation, the following must be associated with the coil:
□ 1 individual rectifier (to be wired)
□ 1 economy resistor arrangement (resistors + auxiliary contact(s) or 1 contactor) wired into the rectified current side.

Operating range min-max (1)		Coil		Economy resistor				Rectifier (for ∿ only)	Coil	Weight
d.c.	a.c.	Resistance at 20 °C ± 10 %	I inrush ± 10 % at Un max	Resistors (2 in series) Unit reference	Total resistance	Contact Qty	Reference	Reference	Reference	
V	V	Ω	A		Ω					kg
48-51	–	3.22	15.8	**DR2SC0068**	2 x 68	1	**ZC4GM2**	–	**WB1KB141**	1.120
52-56	–	4.04	13.8	**DR2SC0082 DR2SC0100**	82 + 100	1	**ZC4GM2**	–	**WB1KB142**	1.120
57-62	–	4.96	12.5	**DR2SC0100 DR2SC0120**	100 + 120	1	**ZC4GM2**	–	**WB1KB155**	1.120
63-68	–	5.86	11.6	**DR2SC0120**	2 x 120	1	**ZC4GM2**	–	**WB1KB132**	1.120
69-79	–	7.2	11	**DR2SC0150**	2 x 150	1	**ZC4GM2**	–	**WB1KB123**	1.120
80-85	–	9.6	8.8	**DR2SC0180 DR2SC0220**	180 + 220	1	**ZC4GM2**	–	**WB1KB133**	1.120
86-98	99-113	11.4	8.6	**DR2SC0220 DR2SC0270**	220 + 270	1	**ZC4GM2**	–	**WB1KB121**	1.120
99-108	114-125	16.3	6.6	**DR2SC0330**	2 x 330	1	**ZC4GM2**	**DR5TE1U**	**WB1KB130**	1.120
109-119	126-136	19.7	6	**DR2SC0390**	2 x 390	1	**ZC4GM2**	**DR5TE1U**	**WB1KB140**	1.120
120-136	137-156	25.2	5.4	**DR2SC0470**	2 x 470	2	**ZC4GM2**	**DR5TE1U**	**WB1KB134**	1.120
137-173	157-196	32.5	5.3	**DR2SC0680**	2 x 680	2	**ZC4GM2**	**DR5TE1U**	**WB1KB124**	1.120
174-191	197-216	49.7	3.8	**DR2SC1000**	2 x 1000	2	**ZC4GM2**	**DR5TE1U**	**WB1KB122**	1.120
192-210	217-238	61	3.4	**DR2SC1200**	2 x 1200	2	**ZC4GM2**	**DR5TE1U**	**WB1KB135**	1.120
211-238	239-272	77.2	3	**DR2SC1500 DR2SC1800**	1500 + 1800	2	**ZC4GM2**	**DR5TE1U**	**WB1KB136**	1.120
239-279	273-318	94	3	**DR2SC1800 DR2SC2200**	1800 + 2200	1	**LP1DT20LDS135**	**DR5TE1S**	**WB1KB139**	1.120
280-310	319-359	128	2.4	**DR2SC2700**	2 x 2700	1	**LP1DT20UDS135**	**DR5TE1S**	**WB1KB125**	1.120
311-341	360-387	160	2.1	**DR2SC3300**	2 x 3300	1	**LP1DT20TDS135**	**DR5TE1S**	**WB1KB137**	1.120
342-399	388-452	197	2	**DR2SC3900**	2 x 3900	1	**LP1DT20TDS135**	**DR5TE1S**	**WB1KB126**	1.120
400-500	453-500	257	1.9	**DR2SC4700 DR2SC5600**	4700 + 5600	1	**LP1DT20VDS135**	**DR5TE1S**	**WB1KB138**	1.120

Specifications

■ Average coil consumption (low sealed consumption):
□ d.c.: inrush 600…800 W, sealed 0.35…0.5 W
□ a.c. (with rectifier): inrush 720…1000 VA, sealed 0.35…0.5 VA.
■ Time constant when sealed 25 ms.
■ Economy resistor consumption: 15…20 W.
■ Operating cycles/hour at θ ⩽ 55 °C: ⩽ 120.
■ Mechanical durability at Uc: 1.2 million operating cycles.
■ With a.c. operation: good resistance to voltage drop on inrush, non susceptibility to micro-breaks, mains harmonics: level ⩽ 7.

(1) For supply voltages of less than 110 V, beware of voltage drops caused by the inrush current.

TeSys contactors

TeSys LC1 B contactors

Replacement coils and accessories for 3-pole contactors

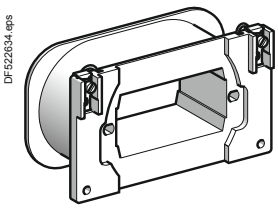

WB1 KB●●●

References

The same coils are used for ⎓ or ∿ contactor control supply.

■ For d.c. operation, the following must be associated with the coil:
□ 1 economy resistor arrangement (resistors + 1 or 2 auxiliary contact(s) or 1 contactor).

■ For 50 to 400 Hz a.c. operation, the following must be associated with the coil:
□ 1 individual rectifier (to be wired),
□ 1 economy resistor arrangement (resistors + auxiliary contact(s) or 1 contactor) wired into the rectified current side.

Operating range min-max (1)		Coil		Economy resistor				Rectifier (for ∿ only)	Coil	Weight
d.c.	a.c.	Resistance at 20 °C ±10 %	I inrush ±10 % at Un max	Resistors (2 in parallel or in series) Unit reference	Total resistance	Contact Qty	Reference	Reference	Reference	
V	V	Ω	A		Ω					kg
47-50	–	1.85	27	**DR2SC0150**	2x150//	1	**ZC4GM2**	–	**WB1KB154**	1.120
51-55	–	2.35	23.5	**DR2SC0180**	2x180//	1	**ZC4GM2**	–	**WB1KB153**	1.120
56-60	–	3.22	18.5	**DR2SC0220**	2x220//	1	**ZC4GM2**	–	**WB1KB141**	1.120
61-66	–	4.04	16	**DR2SC0270**	2X270//	1	**ZC4GM2**	–	**WB1KB142**	1.120
67-72	–	4.96	14.5	**DR2SC0330**	2x330//	1	**ZC4GM2**	–	**WB1KB155**	1.120
73-79	–	5.86	13.5	**DR2SC0100**	2x100	1	**ZC4GM2**	–	**WB1KB132**	1.120
80-92	–	7.2	12.8	**DR2SC0120**	2x120	1	**ZC4GM2**	–	**WB1KB123**	1.120
93-98	108-113	9.6	10.2	**DR2SC0150** **DR2SC0180**	150 + 180	1	**ZC4GM2**	**DR5TE1U**	**WB1KB133**	1.120
99-114	114-132	11.4	10	**DR2SC0180** **DR2SC0220**	180 + 220	1	**ZC4GM2**	**DR5TE1U**	**WB1KB121**	1.120
115-126	133-145	16.3	7.7	**DR2SC0270**	2x270	2	**ZC4GM2**	**DR5TE1U**	**WB1KB130**	1.120
127-139	146-160	11.7	7	**DR2SC0330**	2x330	2	**ZC4GM2**	**DR5TE1U**	**WB1KB140**	1.120
140-159	161-181	25.2	6.3	**DR2SC0390** **DR2SC0470**	390 + 470	2	**ZC4GM2**	**DR5TE1U**	**WB1KB134**	1.120
160-201	182-228	32.2	6.2	**DR2SC0560**	2x560	2	**ZC4GM2**	**DR5TE1U**	**WB1KB124**	1.120
202-222	229-255	49.7	4.5	**DR2SC0820**	2x820	2	**ZC4GM2**	**DR5TE1U**	**WB1KB122**	1.120
223-246	256-282	61	4	**DR2SC1000**	2x1000	1	**LC1DT20LDS135**	**DR5TE1S**	**WB1KB135**	1.120
247-277	283-316	77.2	3.6	**DR2SC1200**	2x1200	1	**LC1DT20LDS135**	**DR5TE1S**	**WB1KB136**	1.120
278-327	317-372	94	3.5	**DR2SC1500**	2x1500	1	**LC1DT20UDS135**	**DR5TE1S**	**WB1KB139**	1.120
328-360	373-408	128	2.8	**DR2SC1500**	3x1500	1	**LC1DT20TDS135**	**DR5TE1S**	**WB1KB125**	1.120
361-399	409-452	160	2.5	**DR2SC1800**	3x1800	1	**LC1DT20VDS135**	**DR5TE1S**	**WB1KB137**	1.120
400-469	453-500	197	2.4	**DR2SC2200**	3x2200	1	**LC1DT20VDS135**	**DR5TE1S**	**WB1KB126**	1.120
470-500	–	257	1.9	**DR2SC2700**	3x2700	1	**LC1DT20RDS135**	–	**WB1KB138**	1.120

Specifications

■ Average coil consumption (low sealed consumption):
□ d.c.: inrush 900…1100 W, sealed 0.7…1 W
□ a.c. (with rectifier): inrush 1100…1300 VA, sealed 0.7…1 VA.
■ Time constant when sealed 25 ms.
■ Economy resistor consumption: 24…30 W.
■ Operating cycles/hour at θ ≤ 55 °C: ≤ 120.
■ Mechanical durability at Uc: 1.2 million operating cycles.
■ With a.c. operation: good resistance to voltage drop on inrush, non susceptibility to micro-breaks, mains harmonics: level ≤ 7.

(1) For supply voltages of less than 110 V, beware of voltage drops caused by the inrush current.

TeSys contactors

TeSys LC1 B contactors

Replacement coils and accessories for 4-pole contactors

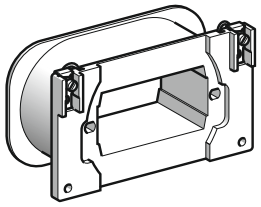

WB1 KB●●●

References

The same coils are used for ⎓ or ∿ contactor control supply.

■ For d.c. operation, the following must be associated with the coil:
□ 1 economy resistor arrangement (resistors + 1 or 2 auxiliary contact(s) or 1 contactor).

■ For 50 to 400 Hz a.c. operation, the following must be associated with the coil:
□ 1 individual rectifier (to be wired),
□ 1 economy resistor arrangement (resistors + auxiliary contact(s) or 1 contactor) wired into the rectified current side.

Operating range min-max (1)		Coil		Economy resistor				Rectifier (for ∿ only)	Coil	Weight
d.c.	a.c.	Resistance at 20 °C ± 10 %	I inrush ± 10 % at Un max	Resistors (3 in series)		Contact		Reference	Reference	
				Reference unit	Total resistance	Qty	Reference			
V	V	Ω	A		Ω					kg
57-61	–	2.35	26	**DR2SC0027**	3x27	1	**ZC4GM2**	–	**WB1KB153**	1.120
62-67	–	3.22	21	**DR2SC0033**	3x33	1	**ZC4GM2**	–	**WB1KB141**	1.120
68-73	–	4.04	18	**DR2SC0039**	3x39	1	**ZC4GM2**	–	**WB1KB142**	1.120
74-81	–	4.96	16.3	**DR2SC0047**	3x47	1	**ZC4GM2**	–	**WB1KB155**	1.120
82-89	–	5.86	15	**DR2SC0056**	3x56	1	**ZC4GM2**	–	**WB1KB132**	1.120
90-102	105-119	7.2	14	**DR2SC0068**	3x68	1	**ZC4GM2**	**DR5TE1U**	**WB1KB123**	1.120
103-111	120-128	9.6	11.5	**DR2SC0100**	3x100	2	**ZC4GM2**	**DR5TE1U**	**WB1KB133**	1.120
112-129	129-148	11.4	11.3	**DR2SC0100**	3x100	2	**ZC4GM2**	**DR5TE1U**	**WB1KB121**	1.120
130-143	149-163	16.3	8.7	**DR2SC0150**	3x150	2	**ZC4GM2**	**DR5TE1U**	**WB1KB130**	1.120
144-157	164-179	19.7	8	**DR2SC0180**	3x180	2	**ZC4GM2**	**DR5TE1U**	**WB1KB140**	1.120
158-180	180-204	25.2	7.1	**DR2SC0220**	3x220	2	**ZC4GM2**	**DR5TE1U**	**WB1KB134**	1.120
181-226	205-259	32.5	6.9	**DR2SC0330**	3x330	2	**ZC4GM2**	**DR5TE1U**	**WB1KB124**	1.120
227-251	260-288	49.7	5	**DR2SC0470**	3x470	1	**LC1DT20LDS135**	**DR5TE1S**	**WB1KB122**	1.120
252-278	289-317	61	4.5	**DR2SC0560**	3x560	1	**LC1DT20UDS135**	**DR5TE1S**	**WB1KB135**	1.120
279-313	318-356	77.2	4	**DR2SC0680**	3x680	1	**LC1DT20UDS135**	**DR5TE1S**	**WB1KB136**	1.120
314-368	357-418	94	3.9	**DR2SC0820**	3x820	1	**LC1DT20TDS135**	**DR5TE1S**	**WB1KB139**	1.120
369-408	419-462	128	3.2	**DR2SC1200**	3x1200	1	**LC1DT20VDS135**	**DR5TE1S**	**WB1KB125**	1.120
409-448	463-500	160	2.8	**DR2SC1500**	3x1500	1	**LC1DT20VDS135**	**DR5TE1S**	**WB1KB137**	1.120
449-500	–	197	2.5	**DR2SC1800**	3x1800	1	**LC1DT20RDS135**	–	**WB1KB126**	1.120

Specifications

■ Average coil consumption (low sealed consumption):
□ d.c.: inrush 1100…1400 W, sealed 1.2…1.6 W
□ a.c. (with rectifier): inrush 1300…1600 VA, sealed 1.2…1.6 VA
■ Time constant when sealed 25 ms
■ Economy resistor consumption: 35…45 W
■ Operating cycles/hour at θ ⩽ 55 °C: ⩽ 120
■ Mechanical durability at Uc: 1.2 million operating cycles
■ With a.c. operation: good resistance to voltage drop on inrush, non susceptibility to micro-breaks, mains harmonics: level ⩽ 7.

(1) For supply voltages of less than 110 V, beware of voltage drops caused by the inrush current.

CR1 B
Magnetic latching contactors

TeSys B

DB116198.eps

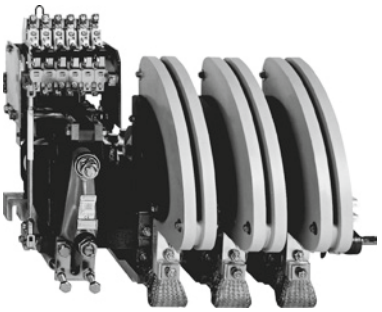

CR1 BL33

Accessories for contactors CR1 B
Control circuit: a.c. or d.c. supply

Maximum thermal current in category AC-1	Rated operational current in category AC-3	Composition	Number of Instantaneous auxiliary contacts		Basic reference, to be completed by adding the voltage code (1)	Weight
A	A		N/C	N/O		kg
800	750	1 pole	2	1	**CR1BL31●21** (2)	32.000
		2 poles	2	1	**CR1BL32●21** (2)	45.000
		3 poles	2	1	**CR1BL33●21** (2)	58.000
		4 poles	2	1	**CR1BL34●21** (2)	72.000
1250	1000	1 pole	2	1	**CR1BM31●21** (2)	31.000
		2 poles	2	1	**CR1BM32●21** (2)	44.000
		3 poles	2	1	**CR1BM33●21** (2)	57.000
		4 poles	2	1	**CR1BM34●21** (2)	71.000
2000	1500	1 pole	2	1	**CR1BP31●21** (2)	41.000
		2 poles	2	1	**CR1BP32●21** (2)	65.000
		3 poles	2	1	**CR1BP33●21** (2)	94.000
		4 poles	2	1	**CR1BP34●21** (2)	120.000
2750	1800	1 pole	2	1	**CR1BR31●21** (2)	52.000
		2 poles	2	1	**CR1BR32●21** (2)	85.000
		3 poles	2	1	**CR1BR33●21** (2)	129.000
		4 poles	2	1	**CR1BR34●21** (2)	160.000

(1) Standard control circuit voltages:

Volts	110	125	127	200	220	240	250	380	412	440	500
∿ 50-400 Hz	F	-	G	L	M	U	-	Q	N	R	S
⎓	FD	GD	-	-	MD	UD	UCD	-	-	RD	SD

For other voltages, see tables of references coils page B10/11 or consult us.

(2) Other configurations, see below.

DB116217.eps

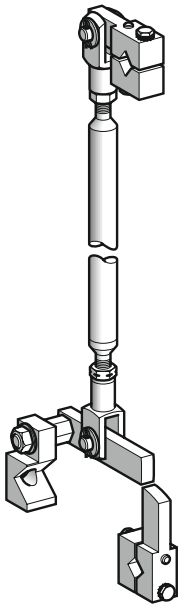

Other configurations for CR1 B

For other configurations of auxiliary contacts, replace the number 21 (2 “N/O” + 1 “N/C”) by the reference of the chosen configuration.
Example: LC1 BP33●30.

1 “N/O” + 2 “N/C” ⟶ **12**

3 “N/O” ⟶ **30**

Accessories for contactors CR1 B

Description	Application	Reference	Weight
			kg
Mechanical interlock (3) with mounting accessories	For vertical assembly of reversing contactors and CR1 B changeover contactor pairs	**EZ2LB0601**	1.560
Kit containing 2 bar mounting brackets		**LA9B103**	1.620

Spare parts see page B10/12.

Note: *the protection coil control circuit against short circuits must be performed by a fuse coordinated with the cable section used: 1.5 mm² for copper: 12 A fuse maximum (BS88 or g1).*

(3) Positive mechanical interlocking between 2 vertically mounted contactors of identical or different ratings. Connecting rods and cranks assembled on right-hand sides, crank pins on the pole side.
Vertical fixing centre distance between the two contactors: 600 mm.

CR1 B
Magnetic latching contactors

TeSys B

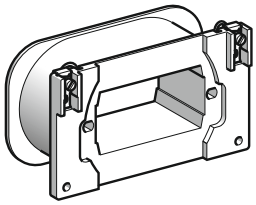

WB1 KB●●●

Coils for CR1 B contactors

Usual voltage		Coils		Spare parts				
⎓	∿ 50 - 400 Hz	Resistance (θ = 20 °C)	Reference	Additional resistors (1)		Cut-out contact		Rectifier for ∿
				R1	R2	Number	Type	
V	V	Ω		Ω	Ω			
For CR1 B●31		**1 pole**						
-	110/120	19.7	**WB1KB140**	68	47	2	**ZC4GM2** or **ZC4GM8**	**DR5TE1U**
110 / 125	-	25.2	**WB1KB134**	68	68	2	**ZC4GM2** or **ZC4GM8**	-
-	220/240	77.2	**WB1KB136**	220	180	2	**ZC4GM2** or **ZC4GM8**	**DR5TE1U**
220	-	94	**WB1KB139**	270	220	2	**ZC4GM2** or **ZC4GM8**	-
250	-	128	**WB1KB125**	330	270	3	**ZC4GM2** or **ZC4GM8**	-
-	380/400	197	**WB1KB126**	470	470	3	**ZC4GM2** or **ZC4GM8**	**DR5TE1S**
-	415/440	257	**WB1KB138**	1000	470	3	**ZC4GM2** or **ZC4GM8**	**DR5TE1S**
For CR1 B●32		**2 poles**						
-	110	9.6	**WB1KB133**	10	33	1	**PR4FB0011**	**DR5TE1U**
110	120/127	11.4	**WB1KB121**	47	39	1	**PR4FB0010**	**DR5TE1U**
125	-	19.7	**WB1KB140**	100	47	1	**PR4FB0009**	-
-	220	32.5	**WB1KB124**	120	120	1	**PR4FB0007**	**DR5TE1U**
220	240	49.7	**WB1KB122**	220	150	1	**PR4FB0007**	**DR5TE1U**
250	-	77.2	**WB1KB136**	330	220	1	**PR4FB0006**	-
-	380/400	128	**WB1KB125**	470	470	1	**PR4FB0005**	**DR5TE1S**
-	415/440	160	**WB1KB137**	680	560	1	**PR4FB0004**	**DR5TE1S**
For CR1 B●33		**3 poles**						
-	110	7.2	**WB1KB123**	39	27	1	**PR4FB0012**	**DR5TE1U**
110	120/127	9.6	**WB1KB133**	47	39	1	**PR4FB0011**	**DR5TE1U**
125	-	11.4	**WB1KB121**	56	47	1	**PR4FB0010**	-
220	240	32.5	**WB1KB124**	180	120	1	**PR4FB0008**	**DR5TE1U**
250	-	61	**WB1KB135**	270	270	1	**PR4FB0006**	-
-	380/400	94	**WB1KB139**	470	390	1	**PR4FB0005**	**DR5TE1S**
-	415/440	128	**WB1KB125**	680	470	1	**PR4FB0004**	**DR5TE1S**
For CR1 B●34		**4 poles**						
-	110	5.8	**WB1KB132**	33	27	1	**PR4FB0014**	**DR5TE1U**
110	120/127	7.2	**WB1KB123**	47	33	1	**PR4FB0012**	**DR5TE1U**
125	-	11.4	**WB1KB121**	56	45	1	**PR4FB0010**	-
-	220	25.2	**WB1KB134**	150	120	1	**PR4FB0008**	**DR5TE1U**
-	240	32.5	**WB1KB124**	180	150	1	**PR4FB0007**	**DR5TE1U**
250	-	49.7	**WB1KB122**	270	220	1	**PR4FB0007**	-
-	380	77.2	**WB1KB136**	390	390	1	**PR4FB0006**	**DR5TE1S**
-	400/440	94	**WB1KB139**	560	470	1	**PR4FB0005**	**DR5TE1S**

(1) For hot and humid conditions "TH treatment", the references of the coils are supplemented by the letters "TH".
*Example: **WB1 KB 135TH**.*
*Reference of resistance: **DR2 SC0010** for 10 ohms and **DR2 SC0470** for 470 ohms.*

Weight of the various elements:
- *coil WB1 KB●●● 1.120 kg*
- *contact ZC4 GM● 0.030 kg*
- *switch PR4 FB00●● 0.600 kg*
- *rectifier DRS TEl● 0.100 kg*
- *resistance DR2 SC0●●● 0.030 kg*

CR1 B
Magnetic latching contactors

TeSys B

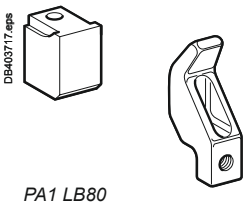

PA1 LB80
(PA1 LB76 + PA1 LB75)

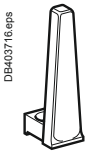

PA1 LB89

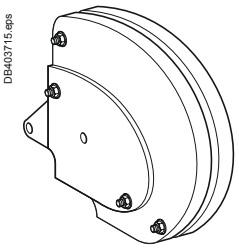

PA1 LB50

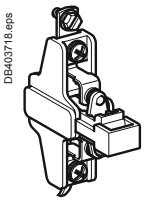

ZC4 GM1

Separate components and spare

Description	For contactors	Number of sets required per pole	Reference	Weight kg
Sets of contacts (1 moving contact, 1 fixed contact)	**CR1BL**	1	**PA1LB80**	0.420
	CR1BM	1	**PA1LB80**	0.420
	CR1BP	2	**PA1LB80**	0.420
	CR1BR	3	**PA1LB80**	0.420
Description	**For contactors**	**Composition**	**Reference**	**Weight kg**
Moving contact only (for one finger)	**CR1B**		**PA1LB75**	0.220
Fixed contact only (for one finger)	**CR1B**		**PA1LB76**	0.200
Blow-out horn only (for 1 finger)	**CR1B**		**PA1LB89**	0.120
Arc chambers (for a single pole)	**CR1BL**		**PA1LB50**	3.700
	CR1BM		**PA1LB50**	3.700
	CR1BP		**PA1PB50**	6.200
	CR1BR		**PA1RB50**	8.500
Auxiliary contact blocks	**CR1B**	1 contact N/C	**ZC4GM1**	0.030
	CR1B	1 contact N/O	**ZC4GM2**	0.030
	CR1B	1 contact N/C	**ZC4GM9**	0.030
	CR1B	1 contact N/O	**ZC4GM8**	0.030
Switch pole for automatic cut-out coil	**CR1B**		**PR4FB00●●** (1)	0.600
Set of moving and fixed contacts for switch pole	**CR1B**		**PV1FA80**	0.035
Arc chamber for switch pole	**CR1B**		**PN1FB50**	0.220

Mechanical interlock for the realization of reversing superposed contactors ref. EZ2-LB0601

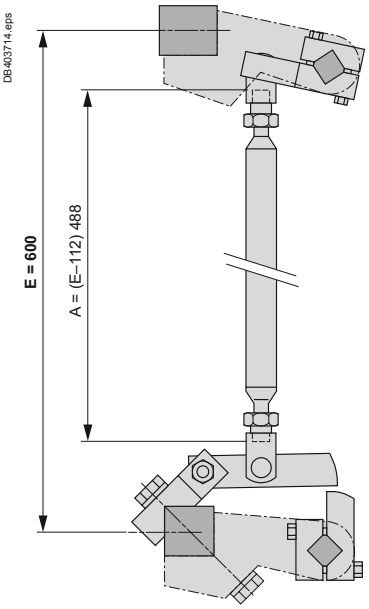

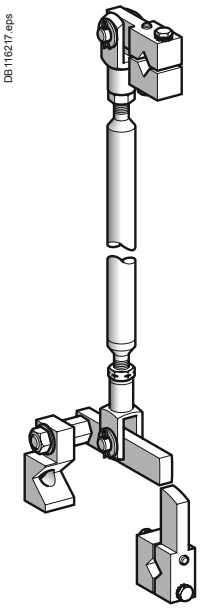

(1) Reference to be completed, see page B10/10.

CRX B and CVX B for switching the excitation circuits of synchronous machines

Magnetic latching contactors

Control circuit: dc

Operational voltage	Number of pole N/O	Number of pole N/C	Instantaneous auxiliary contacts		Rated operational current	Basic reference to be completed by adding the voltage (1)	Weight
	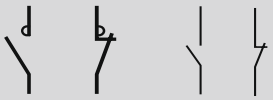						
⎓ V					A		kg
850	2	1	6	2	80	**CRXBF21●●**	6.280
					170	**CRXBG21●●**	10.890
					250	**CRXBH21●●**	15.000
					470	**CRXBJ21●●**	21.700
					630	**CRXBK21●●**	38.150
					800	**CRXBL21●●**	58.000
					1250	**CRXBM21●●**	58.000
					2000	**CRXBP21●●**	81.000
					2750	**CRXBR21●●**	114.000

Contactors with standard electromagnets

Control circuit: dc with economy resistor

Operational voltage	Number of pole N/O	Number of pole N/C	Instantaneous auxiliary contacts		Rated operational current	Basic reference to be completed by adding the voltage (1)	Weight
	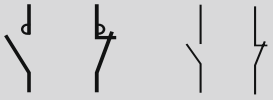						
⎓ V					A		kg
850	2	1	6	2	80	**CVXBF21●●**	6.280
					170	**CVXBG21●●**	10.890
					250	**CVXBH21●●**	15.000
					470	**CVXBJ21●●**	21.700
					630	**CVXBK21●●**	38.150
					800	**CVXBL21●●**	58.000
					1250	**CVXBM21●●**	58.000
					2000	**CVXBP21●●**	81.000
					2750	**CVXBR21●●**	114.000

(1) Standard control circuit voltages (for other voltages, please consult your Regional Sales Office).

Volts	110	125	250
⎓	FD	GD	UD

CRX B and CVX B for switching the excitation circuits of synchronous machines

Contactors description

CRX and CVX B contactors comprise:

- ■ 2 N/O poles with magnetic blow-out (80…2750 A at ⎓ 850 V).
- ■ 1 N/C pole without blow-out (80…630 A).
- ■ 1 electromagnet with d.c. supply
- □ either magnetic latching (CRX B●21●●)
- □ or with economy resistor (CVX B●21●●).
- ■ 2 instantaneous auxiliary contact heads (6 N/O contacts + 2 N/C contacts).
- ■ 1 mounting bar, 1 rotary drive shaft.

The following can be added:
- ■ 1 or 2 blocks of 4 instantaneous auxiliary contacts LAD N●●, without increasing the overall size of the contactor.
- ■ or 1 time delay block LAD T● or LAD R●.

Note: *it is not possible to fit a mechanical latch block LA6 DK●● on these contactors.*

Characteristics

Sizes of contactors CRX B and CVX B			F	G	H	J	K	L	M	P	R
N/O Pole											
Rated current	θ ≤ 40 °C	**A**	80	170	250	470	630	800	1250	2000	2750
Maximum operating voltage d.c.	2 pole series	**V**	850								
Rated insulation voltage According to IEC 60664-1	d.c.	**V**	1000								
Making capacity	d.c.	**A**	1400	2900	3500	5200	6500	14 000	14 000	21 000	25 000
Breaking capacity	d.c. L/R = 15 ms	**A**	500	1000	1200	1200	1500	3200	4400	7200	10 000
Overlap time with the N/C pole		**ms**	2								
N/C Pole											
Rated current	θ ≤ 40 °C	**A**	80	200	300	470	630	630	630	630	630
Making capacity	d.c.	**A**	1600	3200	4000	5200	6500	6500	6500	6500	6500
Breaking capacity	d.c. L/R = 15 ms	**A**	0								
Permissible current	For 10 seconds	**A**	480	960	1400	2700	3600	3600	3600	3600	3600

CRX B and CVX B for switching the excitation circuits of synchronous machines

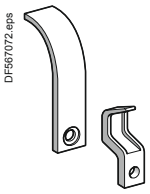

PN1 JB80

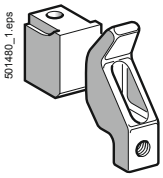

PN1 LB80

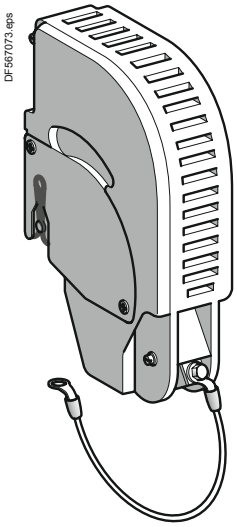

PN3 KB50

Spare parts

Sets of contacts for CRX contactors

Description	Number of sets required per contactor pole	CRX B and CVX B contactor sizes	Reference	Weight kg
1 fixed contact + 1 moving contact	1	F	**PA2FB80**	0.070
	1	G	**PA2GB80**	0.160
	1	H	**PA2HB80**	0.220
	1	J	**PN1JB80**	0.320
	1	K	**PN1KB80**	0.440
	1	L	**PA1LB80**	0.420
	1	M	**PA1LB80**	0.420
	2	P	**PA1LB80**	0.420
	3	R	**PA1LB80**	0.420

Arc chamber only

Description	Number of sets required per contactor pole	CRX B and CVX B contactor sizes	Reference	Weight kg
Arc chamber	1	F	**PA2FB50**	0.070
		G	**PA2GB50**	0.160
		H	**PA2HB50**	0.220
		J	**PN3JB50**	0.320
		K	**PN3KB50**	0.440
		L	**PA1LB50**	0.420
		M	**PA1LB50**	0.420
		P	**PA1PB52**	0.840
		R	**PA1RB52**	1.260

Variable composition standard and high performance contactors

TeSys B

Applications	■ Motor switching in categories AC-3. ■ Resistive load switching: heating, etc. ■ Distribution circuit switching: line contactor. ■ Supply changeover switching: circuit coupling etc. ■ Transformer, capacitor, lighting switching.

PB110868.eps



PB110869.eps



Contactors	Type	**CV1 B**					
	Size	**F**	**G**	**H**	**J**	**K**	**L**
Rated operational current	AC-3	80 A	170 A	250 A	350 A	460 A	700 A
	AC-4/DC-5	72 A/–	145 A/–	205 A/–	290/470 A (1)	380/630 A (1)	584/1000 A (1)
	AC-1	80 A	200 A	300 A	470 A	630 A	1000 A
Rated operational voltage		690 V ∼	690 V ∼	690 V ∼	690 V ∼	690 V ∼	690 V ∼
Available with configuration type command		A - B - C - D					

Available control circuit configuration

Type A
a.c. supply ∼

501346_1.eps

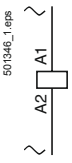

Type B
d.c. supply ⎓

501347_1.eps



(1) With PN3 poles.

Variable composition standard and high performance contactors

TeSys B

- Motor switching in categories AC-4, DC-5.
- Inductive circuit switching.
- High voltage d.c. switching: crane electromagnets, railway locomotives.
- Load switching at high operating rates.

501352_1.eps

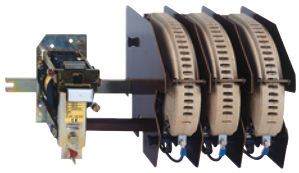

501353_1.eps

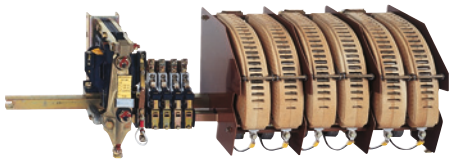

501354_1.eps

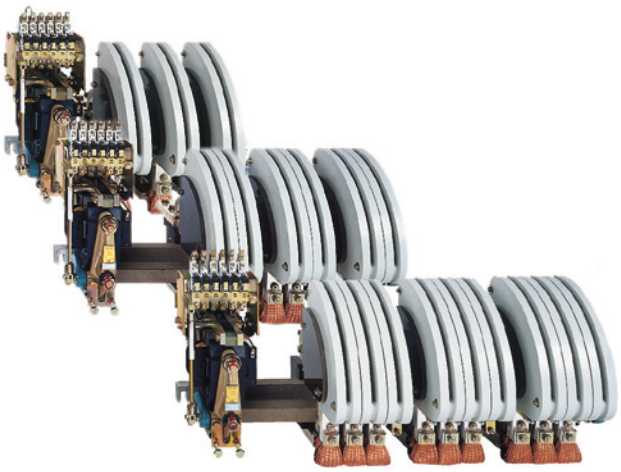

CV3 B				
F	**G**	**H**	**J**	**K**
80 A	200 A	250 A	320 A	460 A
80/80 A	170/200 A	208/300 A	250/320 A	380/500 A
80A	200 A	300 A	320 A	500 A
1000 V ~	1000 V ~	1000 V ~	1000 V ~	1000 V ~
A - B - C - D				

CV3 B and LC1 B			
L	**M**	**P**	**R**
800 A	1000 A	1500 A	1800 A
720/800 A	830/1000 A	1200/1800 A	1500/2500 A
800 A	1250 A	2000 A	2750 A
1000 V ~	1000 V ~	1000 V ~	1000 V ~
C - D (B: special conditions - contact us)			

Type C

a.c. supply via economy resistor

501348_1R.eps

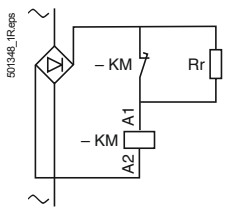

Type D

d.c. supply via economy resistor

501349_1R.eps

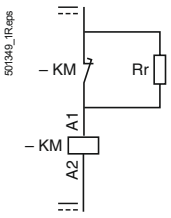

Variable composition contactors
Ordering process

TeSys B

Selection

To define a contactor
The criteria required to define the composition of a contactor are:
- the number of N/O and N/C power poles
- the current and power supply voltage
(note: on a d.c. supply, the time constant $\frac{L}{R}$ of the load must be known in order to define the number of poles to be wired in series to break the arc)
- the control circuit voltage
- the number of auxiliary contacts.

To order a contactor
Three possibilities are offered:
- contactor selectable by code combinations:
  - use the configuration software “bar contactor soft-customer.xls” to download on: www.schneider-electric.com.
  - use the symbol combination table, on the next page.
- Contactor not selectable by code combinations use the symbol combination table or the software, use the order form on catalogue DIA2070702EN.

To order a contactor manually
contactor selectable by code combinations
- Use the symbol combination table on the next page.
- Check the operational currents possible in the selection restrictions table, below.
- Check the maximum number of poles in the selection table, below.

Choice of operational current (Ie) for contactors selectable by code combinations

Contactor type		CV1 BF CV3 BF	CV1 BG CV3 BG	CV1 BH CV3 BH	CV1 BJ CV3 BJ	CV1 BK CV3 BK	CV1 BL
Rated operational current (1)	11 A	E	–	–	–	–	–
	13 A	M	–	–	–	–	–
	20 A	N	–	–	–	–	–
	40 A	P	–	–	–	–	–
	50 A	Q	Q	–	–	–	–
	80 A	F	–	–	–	–	–
	125 A	–	R	R	–	–	–
	200 A	–	G	G	–	–	–
	250 A	–	–	–	S	–	–
	300 A	–	–	H	–	–	–

(1) Other rating: contact us.

Guide to selection of poles for code combinations

Maximum potential of pole contactors, new design (size F to H)

Pole N/O	Pole N/C
0	1
1	0
1	1
2	0
2	1
3	0
4	0

For another combination, please contact us.

Contactors CV1 B or CV3 B:
number of standard auxiliary contacts: 3 N/O +2 N/C + additive Tesys D.

Examples

- Switching of single-phase capacitor: 400 V - 80 A - 1 N/O main pole. 220 V / 50 Hz. control circuit voltage, 3 N/O and 2 N/C auxiliary contacts.
Reference: **CV1 BF1F0ZM5A**.
- Switching of d.c. heating circuits: 800 V - 150 A - 2 N/O main poles - 48 V ⎓.
control circuit, instantaneous auxiliary contact 1 N/O + 1 on-delay.
Reference: **CV3 BG2G0ZEDA + LADT 0, 2 or 4**.

Other versions

To obtain a composition with more main poles or with more than 4 auxiliary contacts, please use **order form CF 452, on** catalogue DIA2070702EN..

Variable composition contactors CV1B / CV3B - 80 to 300 A

Symbol combination table

TeSys B

Reference to be constituted (see examples page B10/18)														
Type of contactor related to application														
∼ 690 V, ⎓ 220 V/pole		**CV1 B**												
∼ 1000 V, ⎓ 440 V/pole		**CV3 B**												
Contactor size AC-1/AC-3														
CV1: 80/80 A	CV3: 80/80 A		**F** *											
CV1: 200/170 A	CV3: 200/200 A		**G** *											
CV1: 300/250 A	CV3: 300/285 A		**H** *											
Number of poles														
N/O poles	1 N/O			**1**										
	2 N/O			**2**										
	3 N/O			**3**										
	4 N/O			**4**										
N/C poles	1 N/C					**1**								
No main poles				**0**	**Z**	**0**	**Z**							
Operational current (determines the blow-out coil size)														
11 A					**E**		**E**							
13 A					**M**		**M**							
20 A					**N**		**N**							
40 A					**P**		**P**							
50 A					**Q**		**Q**							
80 A					**F**		**F**							
125 A					**R**		**R**							
200 A					**G**		**G**							
250 A					**S**		**S**							
300 A					**H**		**H**							
Without breaking					**Z**		**Z**							
Control circuit voltage														
24 V								**B**						
48 V								**E**						
110 V								**F**						
120 V								**K**						
127 V								**G**						
208 V								**L**						
220 V								**M**						
230 V								**P**						
240 V								**U**						
380 V								**Q**						
400 V								**V**						
Operating frequency														
50 Hz									**5**					
60 Hz									**6**					
50/60 Hz (rectifier + economy resistor)									**7**					
⎓									**D**					
⎓ + economy resistor									**R**					
Auxiliary contacts (LA1 BN32 + additives (fitted as standard))														
Instantanés	3 N/O + 2 N/C										**A**			

To check whether the symbol combinations are possible, refer to the selection information and guide on pages B10/18 and B10/20.
If in doubt, fill out order form CF 452, see catalogue DIA2070702EN.

★ *New design, can use any additives in the range of contactors TeSys D except LA6DK, and LAD6K LAD8N.*

Important information for use by Schneider Electric
To place an order in SAP GRC switch-LOGOS
Example: Order the contactor CRXBKZ1GD
■ enter in the Reference product "CRXBK"
■ in the field "Technical text", specify "CRXBK**Z1GD**".

Variable composition contactors
CV1 B - 80 to 1000 A
CV3 B - 80 to 500 A

Selection (see page B10/18)

To order a contactor manually
contactor selectable by code combinations

- Use the symbol combination table on page B10/21.
- Check the operational currents possible in the selection restrictions table, below.
- Check the maximum number of poles in the selection table, below.

Choice of operational current (Ie) for contactors selectable by code combinations

Contactor type		CV1 BF CV3 BF	CV1 BG CV3 BG	CV1 BH CV3 BH	CV1 BJ CV3 BJ	CV1 BK CV3 BK	CV1 BL
Rated operational current (1)	11 A	E	–	–	–	–	–
	13 A	M	–	–	–	–	–
	20 A	N	–	–	–	–	–
	40 A	P	–	–	–	–	–
	50 A	Q	Q	–	–	–	–
	80 A	F	–	–	–	–	–
	125 A	–	R	R	–	–	–
	200 A	–	G	G	–	–	–
	250 A	–	–	–	S	–	–
	300 A	–	–	H	–	–	–
	320 A	–	–	–	T	–	–
	400 A	–	–	–	–	U	–
	470 A	–	–	–	J	–	–
	500 A	–	–	–	–	V	–
	630 A	–	–	–	–	K	K
	1000 A	–	–	–	–	–	L
	0 Sans soufflage	Z	Z	Z	Z	Z	Z

(1) Other rating: contact us.

Guide to selection of code combinations

CV1 B contactors: maximum number of power poles

Contactor type	CV1 BF		CV1 BG		CV1 BH		CV1 BJ		CV1 BK		CV1 BL	
Pole type	N/O	N/C	N/O	N/C	N/O	N/C	N/O	N/C	N/O	N/C	N/O	N/C
Number of poles	5	0	4	0	4	0	4	0	4	0	2 (1)	0
	0	2	0	2	0	2	0	2	0	2	0	1 (2)
	2	1	2	1	2	1	2	1	2	1	–	–

CV3 B contactors: maximum number of power poles

Contactor type	CV3 BF		CV3 BG		CV3 BH		CV3 BJ		CV3 BK	
Pole type	N/O	N/C	N/O	N/C	N/O	N/C	N/O	N/C	N/O	N/C
Number of poles	5	0	4	0	4	0	2	0	2	0
	0	2	0	2	0	2	–	–	–	–
	1	2	1	2	–	–	–	–	–	–
	3	1	2	1	2	1	–	–	–	–

CV1 B or CV3 B contactors:
Maximum number of auxiliary contacts: 4 + 1 time delay if necessary

Selection restrictions, according to coil type:
(1) 4-pole with economy resistor.
(2) 2-pole with economy resistor.

Variable composition contactors
CV1 B - 80 to 1000 A
CV3 B - 80 to 500 A
Symbol combination table

Reference to be constituted (see examples page B10/20)														
Type of contactor related to application														
∼ 690 V, ⎓ 220 V/pole		**CV1 B**												
∼ 1000 V, ⎓ 440 V/pole		**CV3 B**												
Contactor size AC-1/AC-3														
CV1: 80/80 A	CV3: 80/80 A		**F**											
CV1: 200/170 A	CV3: 200/200 A		**G**											
CV1: 300/250 A	CV3: 300/285 A		**H**											
CV1: 470/350 A	CV3: 320/320 A		**J**											
CV1: 630/460 A	CV3: 500/460 A		**K**											
CV1: 1000/700 A			**L**											
Number of poles														
N/O poles	1 N/O			**1**										
	2 N/O			**2**										
	3 N/O			**3**										
	4 N/O			**4**										
	5 N/O			**5**										
N/C poles	1 N/C					**1**								
	2 N/C					**2**								
	3 N/C					**3**								
No main poles				**0**	**Z**	**0**	**Z**							
Operational current (determines the blow-out coil size)														
11 A					**E**		**E**							
13 A					**M**		**M**							
20 A					**N**		**N**							
40 A					**P**		**P**							
50 A					**Q**		**Q**							
80 A					**F**		**F**							
125 A					**R**		**R**							
200 A					**G**		**G**							
250 A					**S**		**S**							
300 A					**H**		**H**							
320 A					**T**		**T**							
400 A					**U**		**U**							
470 A					**J**		**J**							
500 A					**V**		**V**							
630 A					**K**		**K**							
1000 A					**L**		**L**							
Without breaking					**Z**		**Z**							
Control circuit voltage														
24 V								**B**						
48 V								**E**						
110 V								**F**						
120 V								**K**						
127 V								**G**						
208 V								**L**						
220 V								**M**						
230 V								**P**						
240 V								**U**						
380 V								**Q**						
400 V								**V**						
415 V								**N**						
440 V								**R**						
480 V								**T**						
500 V								**S**						
600 V								**X**						
Operating frequency														
50 Hz									**5**					
60 Hz									**6**					
50/60 Hz (rectifier + economy resistor)									**7**					
⎓									**D**					
⎓ + economy resistor									**R**					
Auxiliary contacts (type ZC4 GM)														
N/O instantaneous	1 N/O										**1**			
	2 N/O										**2**			
	3 N/O										**3**			
	4 N/O										**4**			
N/C instantaneous	1 N/C											**1**		
	2 N/C											**2**		
	3 N/C											**3**		
	4 N/C											**4**		
No instantaneous auxiliary contacts											**0**	**0**		
On-delay	1 N/O + 1 N/C on-delay													**J**
Off-delay	1 N/O + 1 N/C off-delay													**N**

To check whether the symbol combinations are possible, refer to the selection information and guide on pages B10/18 and B10/20.
If in doubt, fill out order form CF 452, on catalogue DIA2070702EN.

TeSys B

Technical Data for Designers

Contents

TeSys LC1B:
- > characteristics .... B10/24 and B10/25
- > dimensions B10/26
- > schemes..... B10/27

TeSys CR1B:
- > presentation..... B10/28
- > selection..... B10/29 and B10/30
- > characteristics .... B10/31 and B10/32
- > dimensions B10/33
- > schemes..... B10/34

TeSys CRXB, CVXB:
- > presentation..... B10/35
- > dimensions B10/36

TeSys CV1B, CV3B:
- > presentation..... B10/37 to B10/40

TeSys contactors
TeSys LC1 B contactors

TeSys B

Environment

Contactor type			LC1 BL	LC1 BM	LC1 BP	LC1 BR
Rated insulation voltage (Ui)	Conforming to IEC 60158-1/IEC 60947-4	V	1000	1000	1000	1000
	Conforming to VDE 0110 gr C	V	1500	1500	1500	1500
Conforming to standards			IEC 60947-4, EN 60947-4			
Product certifications			CSA			
Ambient air temperature around the device (for operation at Uc)	Storage	°C	-60…+80			
	Operation	°C	-5…+55			
	Permissible	°C	-30…+70			
Maximum operating altitude	Without derating	m	2000			
Operating positions	Without derating		±23° occasional, in relation to normal vertical mounting plane			

Pole characteristics

Number of poles			1, 2, 3 or 4	1, 2, 3 or 4	1, 2, 3 or 4	1, 2, 3 or 4
Rated operational current (Ie) (Ue ≤ 440 V)	In AC-3, θ ≤ 55 °C	A	750	1000	1500	1800
	In AC-1, θ ≤ 40 °C	A	800	1250	2000	2750
Rated operational voltage (Ue)	Up to	V	1000			
Frequency limits (sine wave)	Without derating	Hz	50/60			
	Derating coefficient		100 Hz: 0.9 - 150 Hz: 0.8 - 250 Hz: 0.7 - 400 Hz: 0.5			
Maximum thermal current (Ith)	θ ≤ 40 °C	A	800	1250	2000	2750
Rated making capacity	I rms conforming to IEC 60158-1 and 60947-4	A	8000	9000	12000	15000
Rated breaking capacity	I rms conforming to IEC 60158-1 and 60947-4 up to 440 V	A	8000	9000	12000	15000
	500 V	A	7000	8000	12000	14000
	660-690 V	A	6000	7000	9000	11000
	1000 V	A	4000	4000	5000	6000
Permissible short time rating From cold state, with no current flowing for previous 60 minutes at θ ≤ 40 °C	For 1 s	A	9600	9600	12000	15000
	For 5 s	A	9600	9600	12000	15000
	For 10 s	A	7000	8000	9600	12000
	For 30 s	A	4800	5200	6400	8000
	For 1 min.	A	3500	3800	5200	6300
	For 3 min.	A	2100	2400	3600	4400
	For 10 min.	A	1200	1800	2800	3600
Short-circuit protection by fuses U ≤ 440 V	Motor circuit (type aM)	A	800	1200	2 x 800 (1)	2 x 1000 (1)
	With thermal overload relay (type gl)	A	1000	1500	2 x 1000 (1)	2 x 1200 (1)
	gl fuses	A	800	1200	2 x 1000 (1)	2 x 1200 (1)
Average impedance per pole	At Ith and 50 Hz	mΩ	0.18	0.18	0.13	0.09
Power dissipated per pole	AC-3	W	115	180	290	290
	AC-1	W	115	280	520	680
Connection	Number of bars		2	2	3	4
	Bar	mm	50 x 5	80 x 5	100 x5	100 x 5
Bolt diameter		mm	4 x Ø8	4 x Ø10	4 x Ø10	4 x Ø10
Tightening torque	Power circuit connections	N.m	18	35	35	35

(1) Fuses must not be connected in parallel unless specified by the manufacturer.

Selection: pages A6/23 to A6/47
References: pages B10/2 to B10/4
Dimensions and schemes: pages B10/26 and B10/27

TeSys contactors
TeSys LC1 B contactors

TeSys B

Control circuit characteristics

Contactor type				LC1 BL	LC1 BM	LC1 BP	LC1 BR
Rated control voltage	50/60 Hz		V	110…500	110…500	110…500	110…500
	⎓ 1,2 or 3-pole contactors		V	48…500	48…500	48…500	48…500
	⎓ 4-pole contactors		V	48…500	48…500	48…500	60…500
Voltage limits	Operation		V	0.85…1.1 Uc	0.85…1.1 Uc	0.85…1.1 Uc	0.85…1.1 Ucw
	Drop-out		V	0.30…0.50 Uc	0.30…0.50 Uc	0.35…0.50 Uc	0.40…0.50 Uc
Maximum consumption (coil + economy resistor)	~	Number of poles: 1	VA	Inrush: 620 - sealed: 10			
		Number of poles: 2	VA	Inrush: 1000 - sealed: 20			
		Number of poles: 3	VA	Inrush: 1300 - sealed: 31			
		Number of poles: 4	VA	Inrush: 1600 - sealed: 47			
	⎓ (1)	Number of poles: 1	W	Inrush: 520 - sealed: 10			
		Number of poles: 2	W	Inrush: 800 - sealed: 20			
		Number of poles: 3	W	Inrush: 1100 - sealed: 31			
		Number of poles: 4	W	Inrush: 1400 - sealed: 47			
Operating time (2) average at Uc (in milliseconds)	"C"		ms	100…150	100…150	100…150	100…150
	"O" breaking on ~ side		ms	50…100	50…100	50…100	50…100
	"O" breaking on ⎓ side		ms	20…40	20…40	20…40	20…40
Mechanical durability (at Uc)	In millions of operating cycles			1.2	1.2	1.2	1.2
Maximum operating rate in mechanical operating cycles	Ambient temperature ≤ 55 °C		Op. cycs/h	120	120	120	120

Characteristics of instantaneous auxiliary contacts ZC4 GM●

Rated thermal current		A	20							
Rated insulation voltage	Conforming to IEC 60947-1	V	660							
	Conforming to VDE, group C	V	750							
Short-circuit protection gl type cartridge fuses	Conforming to IEC 60947-1 and VDE 0660	A	20							
Operational power			~ supply					⎓ supply			
		V	110/127	220	380	415/440	500	110	220	440	500
	1 million operating cycles	VA/W	2000	4000	4000	4000	3500	250	250	230	200
Making and breaking capacity		VA/W	14000	23000	35000	45000	35000	1600	800	400	360
Cabling	With cable end	mm^2	1 or 2 x 4 mm^2 conductors								
	Without cable end	mm^2	1 or 2 x 6 mm^2 conductors								

(1) The inrush and sealed power values of d.c. electromagnets often require the use of an intermediate relay for control.

(2) The closing time "C" is measured from the moment the coil supply is switched on to initial contact of the main poles. The opening time "O" is measured from the moment the coil supply is switched off to the moment the main poles separate.

Bar mounted contactors

Selection: pages A6/23 to A6/47
References: pages B10/2 to B10/4
Dimensions and schemes: pages B10/26 and B10/27

TeSys contactors
TeSys LC1 B contactors

TeSys B

Single, 2, 3 or 4-pole contactors LC1 B
Common side view

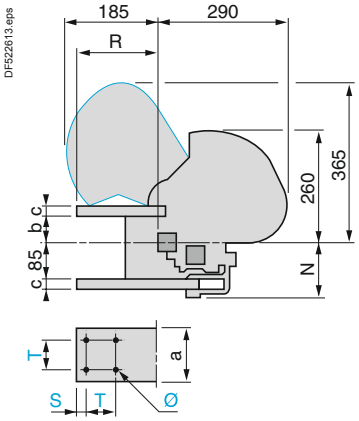

Single, 2 or 3-pole contactors LC1 B•31, B•32 or B•33

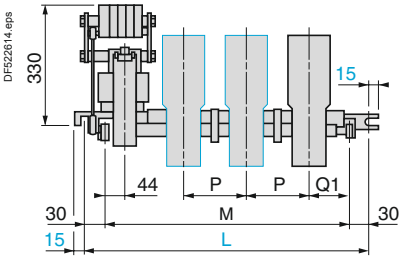

4-pole contactors LC1 B•34

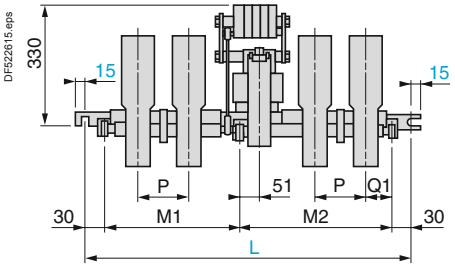

	LC1 BL				LC1 BM				LC1 BP				LC1 BR			
Number of poles	**1**	**2**	**3**	**4**	**1**	**2**	**3**	**4**	**1**	**2**	**3**	**4**	**1**	**2**	**3**	**4**
a	50	50	50	50	63	63	63	63	100	100	100	100	125	125	125	125
b	59	59	59	59	55	55	55	55	55	55	55	55	50	50	50	50
c	16	16	16	16	20	20	20	20	20	20	20	20	25	25	25	25
L	345	445	540	760	345	445	540	760	385	540	760	1065	445	635	885	1065
M	285	385	480	–	285	385	480	–	325	480	700	–	385	575	825	–
M1	–	–	–	308	–	–	–	308	–	–	–	455	–	–	–	455
M2	–	–	–	392	–	–	–	392	–	–	–	550	–	–	–	550
N	121	121	121	121	125	125	125	125	125	125	125	125	130	130	130	130
P	100	100	100	100	100	100	100	100	150	150	150	150	195	195	195	195
Q1	100	100	100	100	100	100	100	100	110	110	110	110	130	130	130	130
R	122	122	122	122	157	157	157	157	173	173	173	173	173	173	173	173
S	10	10	10	10	17	17	17	17	20	20	20	20	20	20	20	20
T	30	30	30	30	30	30	30	30	60	60	60	60	60	60	60	60
Ø	9	9	9	9	11	11	11	11	11	11	11	11	11	11	11	11

Electrical safety clearance
Values X1 and X2 are given for a breaking capacity of 10 In (∼ 3-phase supply).

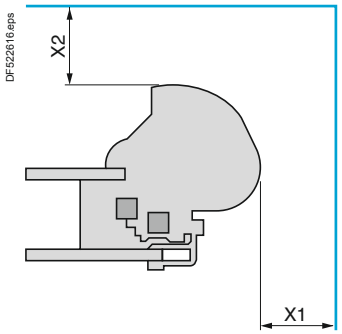

∼ 3-phase voltage		LC1 BL	LC1 BM	LC1 BP	LC1 BR
380/440 V	X1	100	100	150	200
	X2	150	150	200	250
500 V	X1	100	100	150	200
	X2	150	150	220	250
660/690 V	X1	150	150	200	200
	X2	200	200	250	250
1000 V	X1	200	200	200	250
	X2	250	250	250	300

Mechanical interlock for assembling vertically mounted reversing contactors
EZ2 LB0601

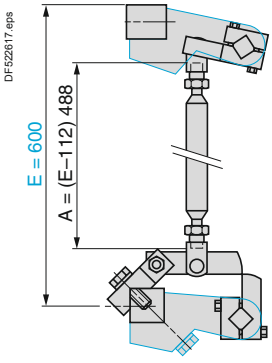

Selection:
pages A6/23 to A6/47

References:
pages B10/2 to B10/4

Schemes:
page B10/27

TeSys contactors
TeSys LC1 B contactors

TeSys B

TeSys LC1 B contactors

LC1 B•31•22

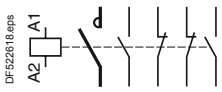

LC1 B•31•31

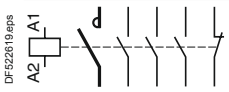

LC1 B•31•13

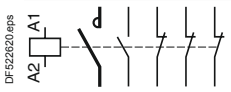

LC1 B•31•40

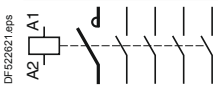

LC1 B•32•22

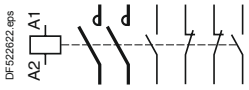

LC1 B•32•31



LC1 B•32•13



LC1 B•32•40

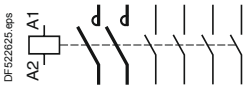

LC1 B•33•22

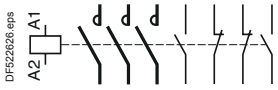

LC1 B•33•31

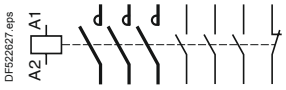

LC1 B•33•13

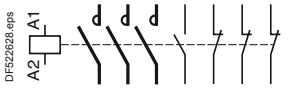

LC1 B•33•40

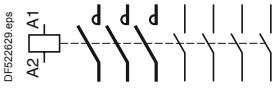

LC1 B•34•22



LC1 B•34•31

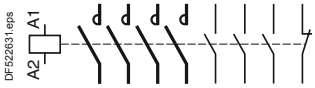

LC1 B•34•13

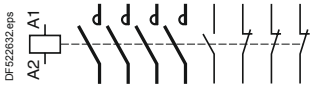

LC1 B•34•40

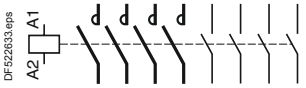

a.c. control circuit

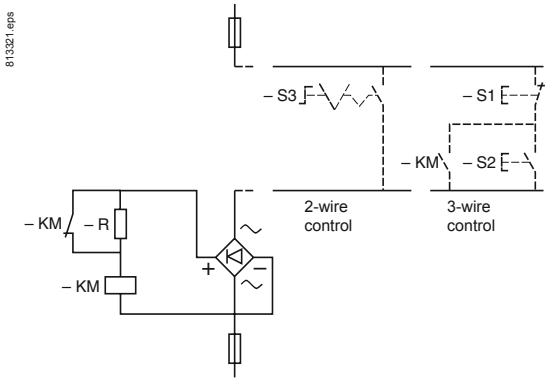

Dotted lines show optional wiring and external items required.

d.c. control circuit

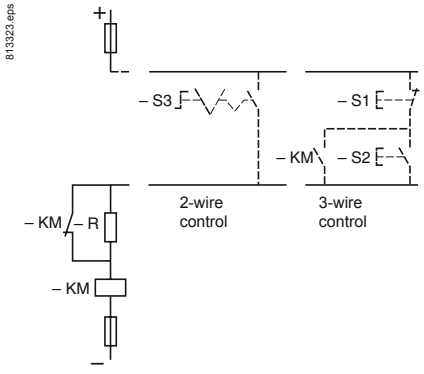

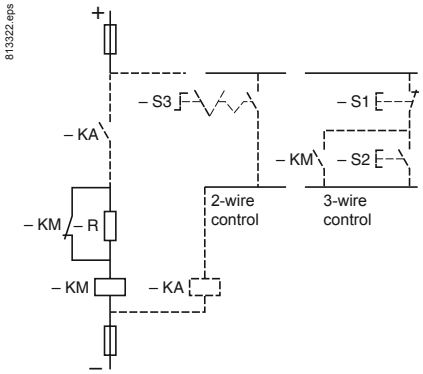

Note: *it is essential to check that the control circuit contacts have ratings compatible with the voltage and power consumption of the operating coil of the contactor. If not, an intermediate "KA" relay must be fitted and wired as shown.*

Dotted lines show optional wiring and external items required.

Bar mounted contactors

CR1 B
Magnetic latching contactors

Magnetic latching contactors

The magnetic latching contactors are equipped with a specific electromagnet allowing them to maintain position “ON” although the coil is fed by any current.

Use

The specific properties of magnetic latching contactors make them suitable for many uses:

Properties	Use
Memory retention of the sequence in automatic equipment, in the event of loss of the control voltage.	Refineries, power plants, excitation circuits.
Energy saving, as no current is drained when the contactor is activated.	Contactor staying activated for long periods. Examples: refineries, alimentation energy, ST distribution.
Change of state “Work” / “Rest” by current pulse sent to the coil.	Selective opening control.
Insensitivity to main perturbations.	No unexpected opening or closing of power poles
Use of contactors beyond breaking capacity as they are activated off-load.	Passer diverter, for use with 1000 V
Silent contactor when locked in ON position	

Electro-magnet operation of the CR1 B contactors

The CR1 B magnetic latching contactors are equipped with a single coil, supplied with direct current or alternating current through a rectifier.
The latching is obtained by direct feeding of the coil with a current in a given direction.
The unlatching is produced by a current of opposite direction, adjusted by resistors.

Range

- The magnetic latching contactors are available from 80 to 630 A (Size F to K).
- The characteristics of N/O and N/C poles are identical to those of CV1 and CV3 B (Size F to K).
- For other characteristics and mounting dimensions, please contact us.
- For ratings of 800 to 2750 A, see next page.

CR1 B
Magnetic latching contactors

TeSys B

Direct starting of squirrel cage motors

In continuous or intermittent service up to 30 operating cycles per hour.

Motor (1) 220 / 230 V		380 / 400 V		415 V		440 V		3-poles contactor
P	In	P	In	P	In	P	In	Size (2)
kW	A	kW	A	kW	A	kW	A	
220	700	355	635	400	650	425	650	**CR1-BL33**
-	-	375	670	425	690	445	680	**CR1-BL33**
-	-	400	710	445	730	450	690	**CR1-BL33**
-	-	-	-	450	740	475	730	**CR1-BL33**
250	800	425	760	475	780	500	780	**CR1-BM33**
257	826	445	790	500	820	530	825	**CR1-BM33**
280	900	450	800	530	870	560	870	**CR1-BM33**
295	948	475	850	560	920	600	920	**CR1-BM33**
300	980	500	900	600	978	630	965	**CR1-BM33**
315	990	530	950	-	-	-	-	**CR1-BM33**

(1) The ratings are for standard 220/230 V, 380/400 V, 415 or 440 V motors. The overload relays should preferably be set to the motor full-load current shown on the motor rating plate. For other power ratings, select the overload relay with the appropriate range; the associated contactor and fuses must have ratings equal to or immediately greater than In.
(2) Reference to be completed on page B10/10 .

Selection guide for utilisation category and electrical durability

a.c.: category AC-3					
CR1 B contactor rating		**L**	**M**	**P**	**R**
Rated operational current (θ ≤ 55 °C)					
440 V	**A**	750	1000	1500	1800
500 V	**A**	750	900	1200	1500
660 V	**A**	700	800	900	1100
1000 V	**A**	400	400	500	600
Operational power (θ ≤ 55 °C) (normalized motor power)					
220 / 230 V	**kW**	220	280	425	500
380 / 400 V	**kW**	400	500	750	900
415 V	**kW**	425	530	800	900
440 V	**kW**	450	560	800	900
500 V	**kW**	500	600	750	900
660 V	**kW**	560	670	750	900
1000 V	**kW**	530	530	670	750

Maximum operating rate of 120 operating cycles/hour, at rated operational power with an on-load factor ≤ 85 %.

Electrical durability in category AC-3 (Ue ≤ 440 V)

For 660 V, multiply the number of operating cycles by 0.8.

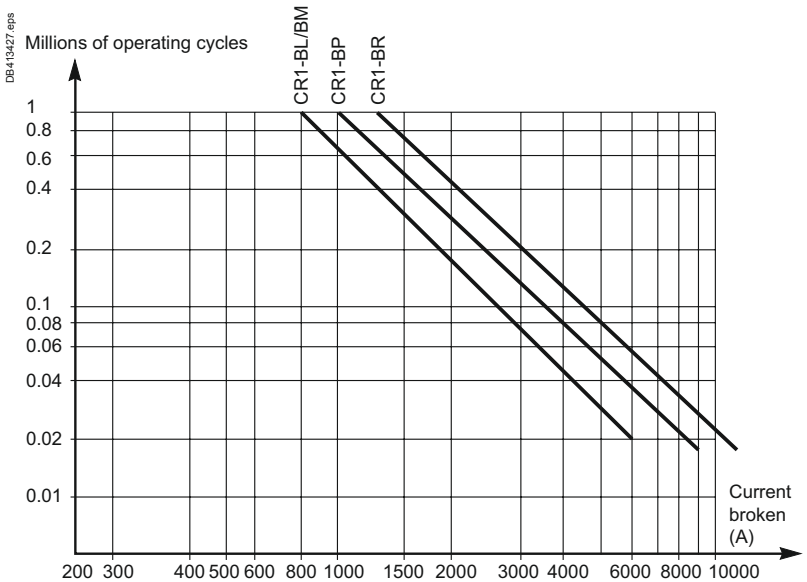

CR1 B
Magnetic latching contactors

TeSys B

Selection guide for utilisation category and electrical durability

Resistive circuits - power factor ≥ 0.95.

a.c.: category AC-3						
CR1 B contactor rating			**L**	**M**	**P**	**R**
Maximum operational current (θ ≤ 55 °C)						
Number of bars			2	2	3	4
Cabling c.s.a.		**mm²**	50 x 5	80 x 5	100 x 5	100 x 5
Rated operationnal current in category AC-1 at ambient air temperature	≤ 40 °C	**A**	800	1250	3000	2750
	≤ 55 °C	**A**	700	1100	1750	2400
	≤ 70 °C	**A**	600	900	1500	2000

Increase in rated operational current by paralleling of poles

Apply the following coefficients to the above currents:
- 2 poles in parallel: K = 1.60
- 3 poles in parallel: K = 2.25
- 4 poles in parallel: K = 2.8.

These coefficients take into account an often unbalanced distribution of current between the poles.

Maximum operating rate in operating cycles 120/hour.

Electrical durability in category AC-1 (Ue ≤ 440 V)

For 660 V, multiply the number of operating cycles by 0.8.

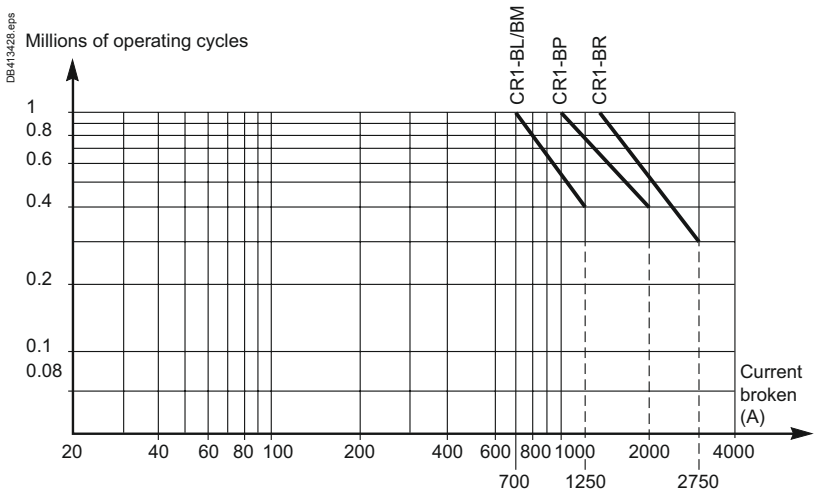

Switching the primaries of 3-phase transformers

Conditions of use

- Maximum operational voltage: 1000 V 50/60 Hz.
- Maximum ambient temperature: 55 °C.

At power up, there is usually a suden inrush current. It reaches almost instantly its peak value and then decreases so approximately exponentially to its rapid steady state value.
The value depends on:
- characteristics of the magnetic circuit and the windings (section of kernel design field,number of turns, dimensions of the coils...)
- characteristics of magnetic metal sheets used (residual induction and saturation induction)
- of the magnetic state of the circuit and the instantaneous value of the alternating voltage of the network at the time of activation.

When a transformer is switched on, there is generally an initial current surge which can reach 20 to 40 times the rated current for the power ratings shown below.

This current reaches its peak value almost instantaneously and then decreases in a largely exponential manner, quickly dropping back down to its steady state value.

CR1 B contactor rating			**L**	**M**	**P**	**R**
Prospective peak current at switch-on		**A**	18000	18000	24000	30000
Maximum operational power (1)	220 / 230 V	**kVA**	230	230	300	380
	380 400 V	**kVA**	400	400	530	660
	415 / 440 V	**kVA**	450	450	560	700
	500 V	**kVA**	480	480	600	750
	660 V	**kVA**	600	600	800	950
	1000 V	**kVA**	700	700	1000	1200

(1) Maximum operational power corresponding to a current peak at switch-on of 30 In.

CR1 B
Magnetic latching contactors
a.c or d.c. control circuit

TeSys B

Characteristics

CR1 B contactor rating				L	M	P	R
Number of poles				1, 2, 3 or 4			
Rated operational voltage			V	1000			
Environment							
Terminal protection cover against accidental contact				Without			
Protective treatment				TC			
Ambient air temperature		storage	°C	-60 ... +80			
		operation	°C	-15 ... +60			
Maximum operating altitude			m	3000			
Maximum inclination				± 30° occasional, in relation to normal vertical mounting plane			
Pole characteristics							
Rated operational voltage conforming to		BS 775 and IEC 158-1	V	1000			
		VDE 0110 grC	V	1500			
Frequency limits by operational current			Hz	50-60			
Operational current	Distribution (θ ≤ 40 °C)	AC-1	A	800	1250	2000	2750
	Motor (θ ≤ 40 °C, U ≤ 440 V)	AC-3	A	750	1000	1500	1800
		AC-4	A	750	1000	1500	1800
Rated making capacity I rms conforming to IEC 158-1			A	10000	10000	15000	18000
Rated breaking capacity conforming to IEC 158-1		220 - 380 - 415 - 440 V	A	10000	10000	15000	18000
		500 V	A	9000	9000	12000	15000
		660 V	A	8000	8000	9000	11000
		1000 V	A	4000	4000	5000	6000
Permissible short time rating From cold state, with no current flowing for previous 60 minutes at θ ≤ 40 °C		for 1 s	A	9600	9600	12000	15000
		for 5 s	A	9600	9600	12000	15000
		for 10 s	A	7000	8000	9600	12000
		for 30 s	A	4800	5200	6400	8000
		for 1 min	A	3500	3800	5200	6300
		for 3 min	A	2100	2400	3600	4400
		for 10 min	A	1200	1800	2800	3600
Short-circuit protection by fuses (max. rating)	Distribution	type g1 - BS 88	A	800	1200	1000 x 2 (1)	1200 x 2 (1)
	Motor circuit	type aM	A	800	1200	800 x 2 (1)	1000 x 2 (1)
	With thermal overload relay	type g1 - BS 88	A	1000	1500	1000 x 2 (1)	1200 x 2 (1)
Average impedance per pole			mΩ	0.18	0.18	0.13	0.09
Power dissipated per pole		AC-1	W	115	280	520	680
		AC-3	W	88	180	290	360
Number of bars				2	2	3	4
Bar			mm	50 x 5	80 x 5	100 x 5	100 x 10
Control circuit characteristics							
Rated control voltage		50/60 Hz	V	110 to 500			
		400 Hz and ⎓	V	110 to 500			
Voltage limits ∿ and ⎓		latching	Un	0.85 to 1.1			
		unlatching	Un	0.85 to 1.1			
Maximum operating rate in mechanical operating cycles (at θ ≤ 40 °C)			man./h	120			
Mechanical durability			man.	1 million			
Average consumption at 50/60 Hz	Latching	1 pole	VA	650	650	650	650
		2 poles	VA	1100	1100	1100	1100
		3 poles	VA	1650	1650	1650	1650
		4 poles	VA	1850	1850	1850	1850
	Unlatching	1 pole	VA	110	110	110	110
		2 poles	VA	125	125	125	125
		3 poles	VA	165	165	165	165
		4 poles	VA	175	175	175	175
Average consumption at 400 Hz and ⎓	Latching	1 pole	VA	600	600	600	600
		2 poles	VA	1000	1000	1000	1000
		3 poles	VA	1500	1500	1500	1500
		4 poles	VA	1700	1700	1700	1700
	Unlatching	1 pole	VA	100	100	100	100
		2 poles	VA	115	115	115	115
		3 poles	VA	150	150	150	150
		4 poles	VA	160	160	160	160
Average operating time at nominal voltage				The closing time “C” is measured from the moment the coil supply is switched on to initial contact of the main poles. The opening time “O” is measured from the moment the coil supply is switched off to the moment the main poles separate.			
Operating in a.c. or d.c.		Latching	ms	100 - 150	100 - 150	100 - 150	100 - 150
		Unlatching	ms	20 - 40	20 - 40	20 - 40	20 - 40
				Note: the arcing time depends on the circuit switched by the main poles. For 3-phase applications the arcing time is usually less than 10 ms. The load is isolated from the supply after a time equal to the sum of the opening time and the arcing time.			
Characteristics of instantaneous auxiliary contacts (type ZC4 GM for CR1 B contactors)							
Rated thermal current			A	20			
Rated insulation voltage conforming to		IEC 337-1		660			
		VDE 0110 grC		750			
Cabling		Number of bars		2			
		Bar c.s.a.	mm²	4			

(1) Parallel cabling must be done only according the instructions of the fuses manufacturer.

CR1 B
Magnetic latching contactors

TeSys B

Characteristics

Characteristics of instantaneous auxiliary contacts (type ZC4 GM for CR1 B contactors)

Operational power	in a.c.	**V**	110/127	220	380	415/440	500
	1 million operating cycles	**VA**	2000	4000	4000	4000	3500
	occasional making capacity	**VA**	14000	23000	35000	45000	35000
			Electrical durability (valid for up to 2400 operating cycles/hour) on an inductive load such as the coil of an electromagnet: making current (cos φ 0.7) = 10 times the power broken (cos φ 0.4).				
Operational power	in d.c.	**V**	110	220	440	500	
	1 million operating cycles	**VA**	250	250	230	200	
	occasional making capacity	**VA**	1600	800	400	360	
			Electrical durability (valid for up to 1200 operating cycles/hour) on an inductive load such as the coil of an electromagnet, without economy resistor, the time constant increasing with the load.				

Adjustment characteristics for control circuit

CR1 B contactor rating			**L**	**M**	**P**	**R**
Electromagnet		**Ref.**	ET1-KB50			
Air gap of the magnetic circuit		**mm**	5/100			
Pick-up travel (E)		**mm**	30			
Pull-in travel (e)		**mm**	10			
N° of the return spring of the moving part			1 x 292 (1 pole contactors) 2 x 292 (2 poles, 3 poles, 4 poles contactors)			
Type of coil			WB1-KB			
Pull-in cold voltage (θ = 20 °C)		**Un**	0.75			
Drop-out voltage		**Un**	0.30 to 0.50			
Adjustment of application force (F) on the contact per pole	according to contactor composition					
Number of springs	1 pole		201	201	201	155
	2 poles		201	201	201	155
	3 poles		201	201	201	155
	4 poles		201	201	201	155
Application force (F) to contact per pole	1 pole	**daN**	30	30	30 (1)	30 (2)
	2 poles	**daN**	30	30	30 (1)	30 (2)
	3 poles	**daN**	30	30	30 (1)	30 (2)
	4 poles	**daN**	30	30	30 (1)	30 (2)
Switch pole setting	Opening gap (b.), electro-magnet closed	**mm**	2 ±0.5			
	Beginning of opening, during closing action (F)	**mm**	12 to 14			
	Application force (F)	**daN**	0.900			

(1) Each pole has 2 contacts: the force must be applied evenly to each of these contacts.
(2) Each pole has 3 contacts: the force must be applied evenly to each of these contacts.

Electromagnet ET1-KB50

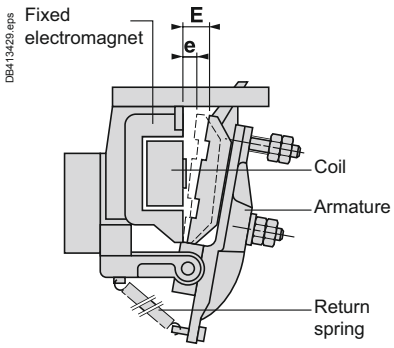

N/O pole

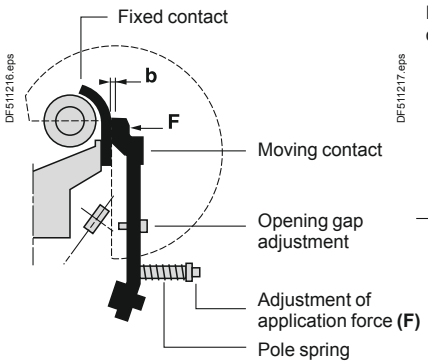

N/C pole

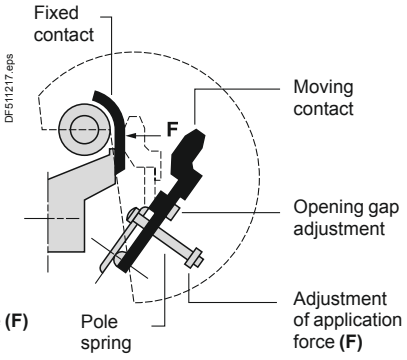

CR1 B
Magnetic latching contactors

TeSys B

Front face view

Single, 2 or 3-pole contactors

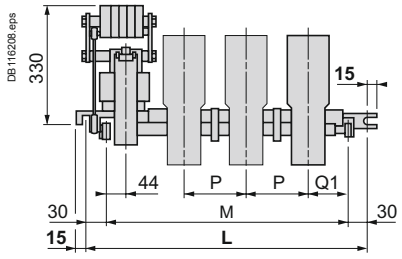

4-pole contactors

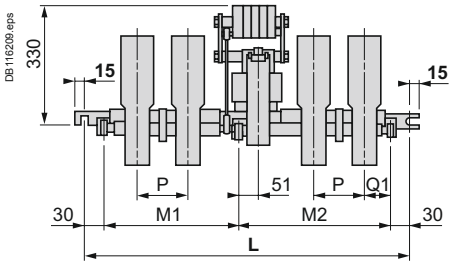

Common side view

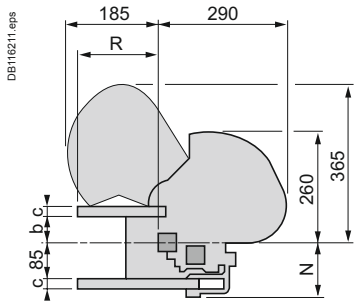

Drilling plan of busbars connections

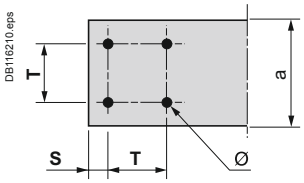

Diameter of screw: 12 mm.

Type	Rating (A)	Number of poles	L	M	M1	M2	b	c	ø	a	T	S	R	N	P	Q1
CR1 BL	800	1	345	285	-	-	59	16	9	50	30	10	122	121	100	100
		2	445	385	-	-	59	16	9	50	30	10	122	121	100	100
		3	540	480	-	-	59	16	9	50	30	10	122	121	100	100
		4	760	-	308	392	59	16	9	50	30	10	122	121	100	100
CR1 BM	1250	1	345	285	-	-	55	20	11	63	30	17	157	125	100	100
		2	445	385	-	-	55	20	11	63	30	17	157	125	100	100
		3	540	480	-	-	55	20	11	63	30	17	157	125	100	100
		4	760	-	308	392	55	20	11	63	30	17	157	125	100	100
CR1 BP	2000	1	385	325	-	-	55	20	11	100	60	20	173	125	150	110
		2	540	480	-	-	55	20	11	100	60	20	173	125	150	110
		3	760	700	-	-	55	20	11	100	60	20	173	125	150	110
		4	1065	-	455	550	55	20	11	100	60	20	173	125	150	110
CR1 BR	2750	1	445	385	-	-	55	20	11	125	60	20	173	130	195	123
		2	635	575	-	-	55	20	11	125	60	20	173	130	195	123
		3	885	825	-	-	55	20	11	125	60	20	173	130	195	123
		4	1065	-	455	550	55	20	11	125	60	20	173	130	195	123

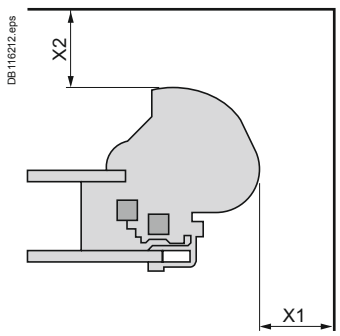

Minimum electrical clearance

Values X1 and X2 are given for a breaking capacity of 10 In (a 3-phase supply).

Rating of contactor CR1 B		L	M	P	R
∼ 3-phase voltage					
380/440 V	X1	100	100	150	200
	X2	150	150	200	250
500 V	X1	100	100	150	200
	X2	150	150	220	250
660 V	X1	150	150	200	200
	X2	200	200	250	250
1000 V	X1	200	200	200	250
	X2	250	250	250	300

CR1 B
Magnetic latching contactors

Contactor CR1 B with overload relay

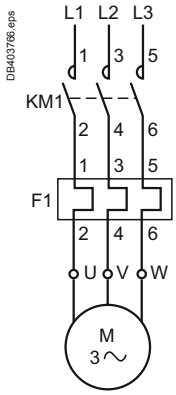

Contactor CR1 B

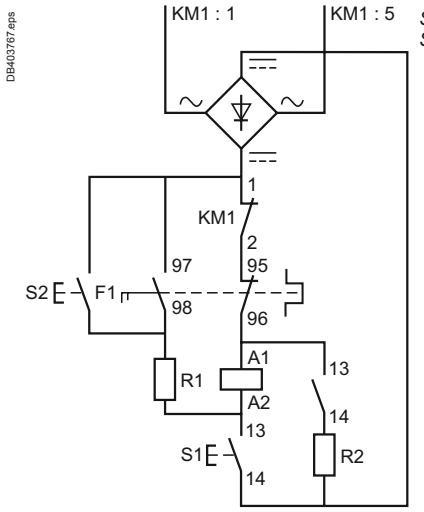

S1: latching pushbutton.
S2: unlatching pushbutton.

CRX B and CVX B for switching the excitation circuits of synchronous machines

Presentation

Variable composition contactors CRX B and CVX B are designed for switching the excitation circuits of synchronous machines, in particular electrical power station generators, for operational currents from 80 to 2750 A.
Example: Static excitation generator.

Basic scheme

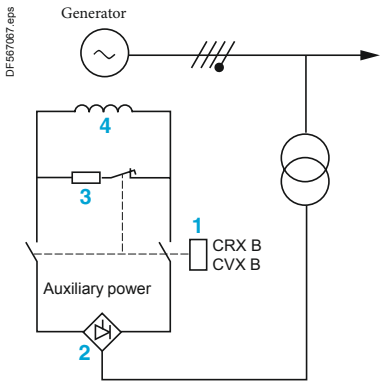

1 Excitation contactor
2 Thyristor bridge
3 Discharge resistor Rd
4 Excitation winding

Operating principle

The voltage delivered by the generator is related to the current flowing through the excitation winding 4.

Start-up phase

- The contactor 1 closes, off load.
- An adjustable auxiliary power supply generates current in the excitation winding 4 to allow power-up of the generator.
- When the voltage delivered by the generator is sufficient to supply the excitation winding 4 via a thyristor bridge 2, the auxiliary supply is switched off.

Stop phase

When a stop instruction is received, the thyristor bridge 2 operates for a few seconds as an inverter, then the excitation contactor 1 opens.
The function of the N/C pole is to discharge residual electromagnetic energy from the excitation winding 4 via the discharge resistor Rd 3.

Under normal operating conditions, breaking is therefore easy, especially as the N/O poles and the N/C pole are make before break.
However, in the event of a problem, the contactor must be able to break.

Note: *The N/C pole, which is used for machine de-excitation, has no arc chambers.*
Its breaking capacity is nil. Re-energisation of the contactor must therefore be avoided during the de-excitation phase.
If there is any risk of this happening, it is advisable to add an off-delay function that prevents pick-up of the contactor for the 10 seconds following drop-out.

CRX B and CVX B for switching the excitation circuits of synchronous machines

TeSys B

Contactors CRX B and CVX B, sizes F to K

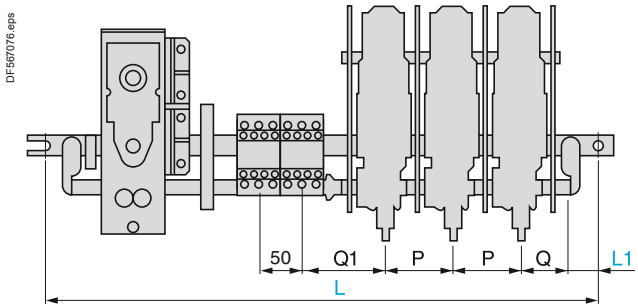

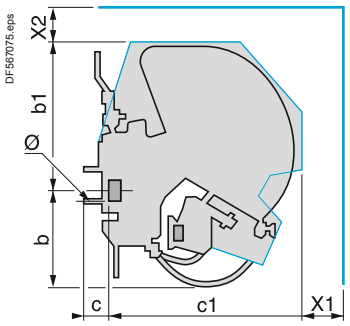

Dimension L: fixing centres depending on the number of N/O or N/C main poles, with or without magnetic blow-out, and the number of ZC4 GM auxiliary contact blocks in addition to the maintaining contact.

C●X B contactor size	Ø	b	b1	c	c1	L	L1	P	Q	Q1	Minimum electrical clearance X1	X2
F	M6	75	120	17	149	445	15	50	20	52	25	15
G	M8	60	164	43	134	540	15	50	45	52	20	15
H	M10	62	188	52	176	540	20	60	57	57	60	55
J	M10	114	117	40	173	635	34	85	64	70	50	100
K	M12	141	214	45	215	760	37	100	64	75	80	80

Contactors CRX B and CVX B, sizes L to R

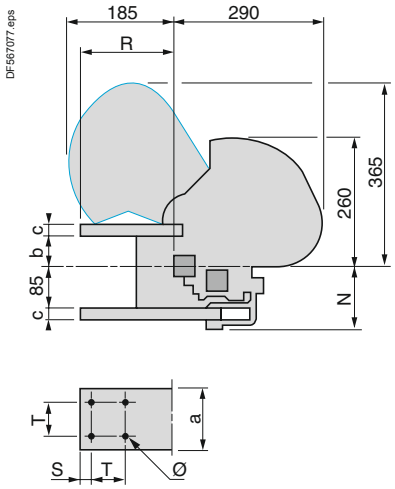

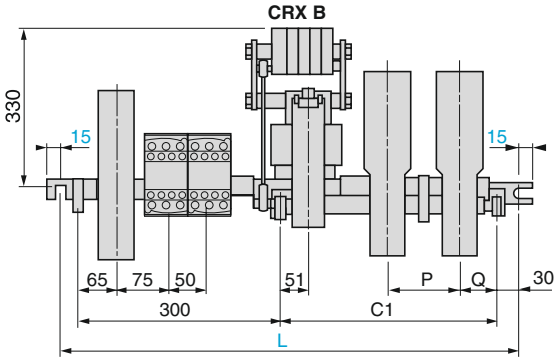

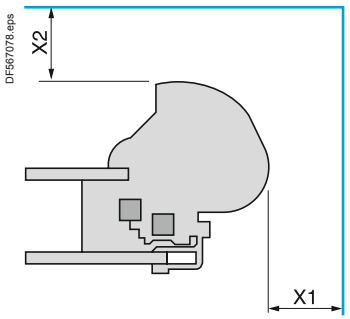

*Dimension L: fixing centres depending on the number of N/O or N/C main poles, with or without magnetic blow-out, and the number of **ZC4 GM** auxiliary contact blocks in addition to the maintaining contact.*

C●X B contactor size	Ø	b	c	C1	L	N	P	Q	R	Minimum electrical clearance X1	X2
L	M8	59	16	392	760	121	100	100	122	200	250
M	M10	55	20	392	760	125	100	100	157	200	250
P	M10	55	20	487	885	125	150	110	173	200	250
R	M10	50	25	582	950	130	195	130	173	250	300

Variable composition contactors

TeSys CV1 B, CV3 B

The variable composition contactor range is split into 3 groups:

■ **Low power switching contactors:**
□ type CV1 B●, 80 to 1000 A
□ type CV3 B●, 80 to 500 A.
For motor control, the references of the CV1 and CV3 contactors are given on catalogue DIA2070702EN.
For other applications, the composition of the commercial references is described on Symbol combination table, see pages B10/18 and B10/21 or use the configuration software “bar contactor soft-customer.xls” to download on: www.schneider-electric.com.

■ **Increased power switching contactors:**
□ type LC1 B●, 800 to 2750 A. References shown on B10/2.

■ **Specific contactors** (large number of main poles, pole arrangement, customised fixing and dimensions, component referencing, etc.) :
□ type CV1●B, 80 to 1000 A
□ type CV3●B, 80 to 2750 A.
To order these contactors, complete the Order form on catalogue DIA2070702EN.

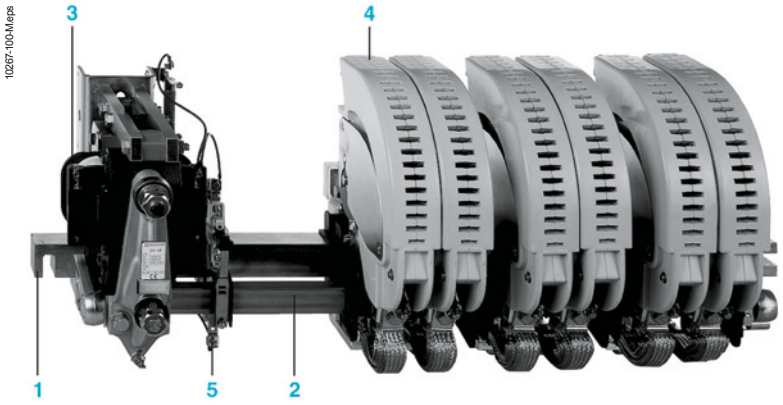

1 Mounting bar
2 Rotating armature shaft
3 Electromagnet
4 Main pole
5 Instantaneous auxiliary contacts, type GM

Variable composition contactors are particularly suited for switching a.c. or d.c. motors and other circuits and are capable of providing a high number of operating cycles.
Their variable composition design allows them to be built to customer specification.

Applications

These variable composition contactors are ideally suited for the most frequently encountered applications:

■ Switching a.c. squirrel cage and slip-ring motors in all utilisation categories (AC-2, AC-3, AC-4).
■ Switching d.c. motors in all utilisation categories (DC-2, DC-3, DC-4, DC-5).
■ Switching a.c. resistive loads (category AC-1) and d.c. resistive loads (category DC-1).
■ Switching distribution circuits (category AC-1).
■ Short-circuiting of rotor resistors.
■ Switching capacitors, power factor correction.
■ Switching transformer primaries.
■ Switching inductive circuits with high time constant (L/R > 15 ms)
Example: alternator excitation circuit.
■ Severe duty requirements and main pole arrangements comprising 1 to 6 N/O and/or N/C poles.

Variable composition contactors

TeSys CV1 B, CV3 B

DF511200.eps

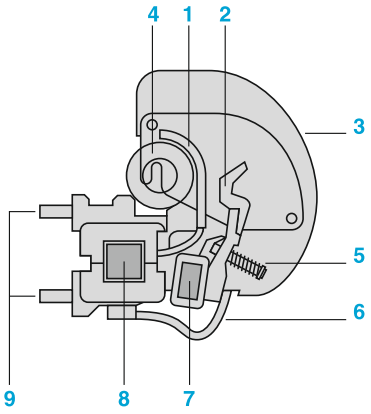

N/O pole 80…2750 A.

DF511201.eps

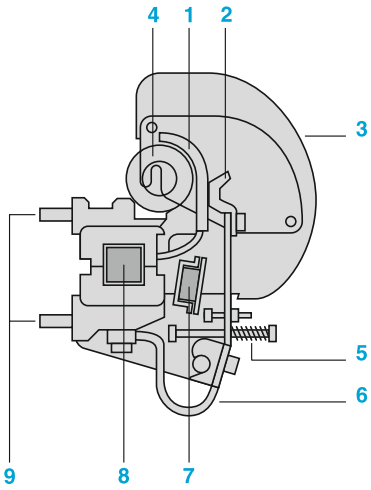

N/C pole 80…1000 A.

1 Fixed contact
2 Moving contact
3 Arc chamber
4 Blow-out coil
5 Pole pressure spring
6 Braided conductor
7 Rotating armature shaft (moving contact actuator)
8 Mounting bar
9 Terminal lugs

Power circuit

The principal function of a main pole is to make and break the supply current.
It is designed to continuously carry its nominal operational current.

Making the current

On energisation of the electromagnet coil, the armature shaft rotates and the moving contact makes with the fixed contact. The contact pressure, maintained by the pole pressure spring, is sufficient to overcome the electrodynamic forces of transient current peaks (e.g.: switching a transformer, starting a motor, etc.).

Breaking the current

On de-energisation of the electromagnet coil, the contacts separate and electrical arcing is dissipated by the blow-out coil and arc chamber. To optimise the performance of the magnetic blow-out, the blow-out coil can be selected to suit the operational current, which is particularly important when switching d.c.
The N/C pole operates in a reverse manner to the N/O pole, i.e. the contacts are closed whilst the electromagnet coil is de-energised and open during energisation.

CV1 contactors

■ **690 V ∿, 220 V ⎓ / pole**
□ N/O poles 80…1000 A (PN1)
□ N/C poles 80…1000 A (PR1).

■ **Variants:**
□ no-load breaking poles
- N/O poles 80…1000 A (PN5)
- N/C poles 80…1000 A (PR5).

□ arc chambers with splitters for dispersing the electric arc: 1000 V ∿ / 440 V ⎓ per pole
- N/O poles 500…1000 A (PN3)
- N/C poles 500…1000 A (PR3).

CV3 contactors

■ **1000 V ∿, 440 V ⎓ / pole**
□ N/O poles 0…500 A (PA3)
□ N/C poles 80…500 A (PR3)
□ N/O poles 750…2750 A (PA1).

■ **Variants:**
□ high making capacity poles 750…2750 A (PA2)
□ high breaking capacity poles and poles with reduced safety clearances (arc chambers with closed splitters) 750…2750 A (PA1PX8)
□ no-load breaking poles
- N/O poles 750…2750 A (PA5).

Variable composition contactors

TeSys CV1 B, CV3 B

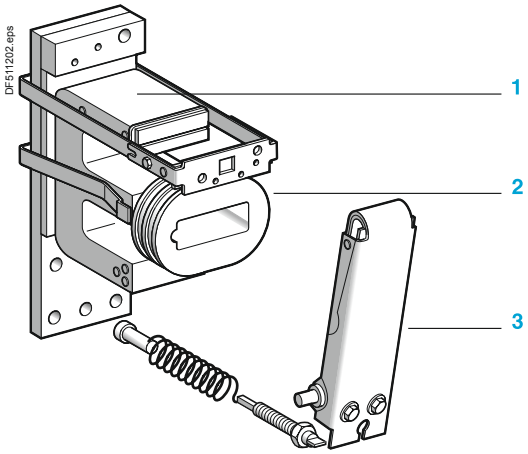

Electromagnet EB1 or EC1
1 Electromagnet core
2 Coil
3 Electromagnet armature

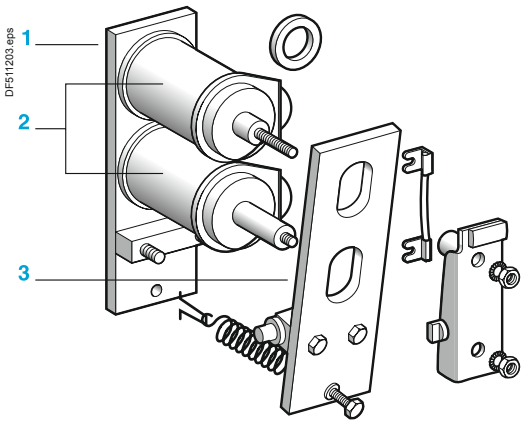

Electromagnet EK
1 Electromagnet core
2 Coil
3 Electromagnet armature

Control circuit

■ 2 types of electromagnet: E shaped core and U shaped core.
■ 2 types of coil: type WB1 and type WB2.

Electromagnet with E shaped core and coil type WB1

■ **Electromagnet with E shaped laminated iron core, type EB or EC** (1)
□ with central air gap machined in armature,
□ with single coil type **WB1** fitted on centre limb of core.
The upper limb incorporates a shading ring, the armature rotates.

■ **Coil - direct a.c. 50 or 60 Hz supply**
□ 20 to 600 V
□ 1200 operations/hour.

At the moment of inrush, with the armature open, the coil impedance is low and power consumption is high.
In the sealed state the armature is closed, the coil impedance increases and power consumption is low.
The inrush current is 6 to 10 times higher than the sealed current.

■ **Electromagnet** directly DC powered or via individual rectifier (50-400 Hz):
□ the electromagnet is mounted with the reduction in consumption
□ 12 to 500 V
□ 120 operations/hour.

■ **Electromagnet** powered via individual rectifier (50-400 Hz):
□ the electromagnet is mounted with the reduction in consumption
□ 12 to 500 V
□ 120 operations/hour.

At the moment of inrush, the full actuating voltage is applied to the coil and the inrush current is determined by the coil resistance.
In the sealed state an additional resistor is switched automatically in series with the coil, so as to reduce power consumption.
This economy resistor is switched by a N/C auxiliary contact which is adjusted to open only when the armature is fully closed.
The inrush current is 15 to 40 times higher than the sealed current.

Coils type WB1, used in conjunction with laminated iron cores, have a much higher inrush current than sealed current, whatever the nature of the supply current.

When establishing the current and selecting the supply voltage rating, it is important to take into account the line voltage drop due to the inrush current.

Electromagnet with U shaped core and coil type WB2 for d.c. supply

■ **Electromagnet** with U shaped solid iron core, type **EK:**
□ 2 similar coils type **WB2** connected in series, one coil being fitted to each limb of the core
□ the armature rotates.

■ **Electromagnet** for d.c. supply
□ 12 to 600 V
□ 1200 operations/hour.

The coils for this type of electromagnet have a considerable number of turns so as to obtain sufficient magnetic flux to attract the armature.

Due to its simplicity and relatively slow movements the assembly is very robust and, therefore, has increased mechanical durability.

(1) For contactor compositions requiring an increased number of poles, use EC electromagnets.

Variable composition contactors

TeSys CV1 B, CV3 B

Instantaneous and time delay auxiliary contacts

Signalling, electrical interlocking and slave functions can be achieved by using auxiliary contacts.

Instantaneous auxiliary contacts suitable for use with all contactor types are available in 2 versions:
- 1 N/O instantaneous contact, reference ZC4 GM1.
- 1 N/C instantaneous contact, reference ZC4 GM2.
- 1 block of 3 instantaneous N/O contacts and 2 N/C instantaneous contacts, reference LA1BN32A.

Delayed auxiliary contacts can be mounted onto contactors CV1 and CV3:
- 1 N/O contact + 1 N/C contact, ON-delay, reference ZC2 GG1 (delay from 0.2 to 180 s)
- 1 N/O contact + 1 N/C contact, OFF-delay, reference ZC2 GG5 (delay from 0.2 to 180 s)
- On the block LA1 BN32A, 1 block of N/O ON-delayed contact + 1 N/C ON-delayed contact , references LADT0 (delay from 0.1 to 3 s), LADT2 (0.1 to 30 s), LADT4 (10 to 180 s)
- On the block ref. LA1 BN32A: 1 block of N/O OFF-delayed contact + 1 N/C OFF-delayed contact, references LADR0 (delay from 0.1 to 3 s), LADR4 (10 to 180 s).

The delayed contacts are established or separate some time after the closing or opening of the contactor which operates them. This time is adjustable.

On the block LA1 BN32A all TeSys D contactors additives can be mounted, with the exception of LA6DK, LAD6K and LAD8N

Assembling reversing/changeover contactor pairs

Mounting accessories

For applications involving the switching of reversing motors or changeover circuits, contactors of different ratings can easily be mounted vertically and interlocked. Mechanical interlock kits are available and auxiliary contacts can be used for electrical interlocking.

Overload relays from 0.16 to 630 A

Thermal overload relays - For use with TeSys K contactors

Type of product	Range		Pages
Adjustable thermal overload relays For motors TeSys LRK	From 0.16 to 16 A		B11/2
Adjustable thermal overload relays For unbalanced loads TeSys LRK	From 0.8 to 16 A		B11/3

Thermal overload relays Class 10 - For use with TeSys D contactors

Adjustable thermal overload relays For motors TeSys LRD	From 0.16 to 140 A	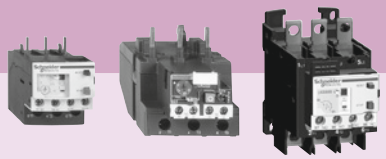	B11/4
Adjustable thermal overload relays For unbalanced loads TeSys LRD	From 0.16 to 140 A		B11/4

Thermal overload relays Class 20 - For use with TeSys D contactors

Adjustable thermal overload relays For motors TeSys LRD	From 0.63 to 80 A	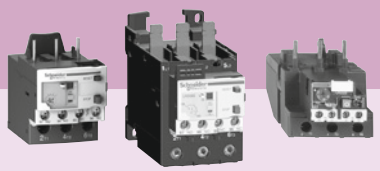	B11/6
Adjustable thermal overload relays For unbalanced loads TeSys LRD	From 0.63 to 32 A		B11/6

Electronic thermal overload relays - For use with TeSys D contactors

Adjustable electronic overload relay, Multi-class, multi-scale TeSys LR9D	From 0.1 to 150 A		B11/10

Electronic thermal overload relays - For use with TeSys F contactors

Compensated and differential overload relays, with or without alarm TeSys LR9F	From 50 to 630 A		B11/11

Single pole magnetic over current relays

Latching or non latching overload relays TeSys RM1	From 1.15 to 630 A		B11/15

Thermistor-type protection units – For use detection of motor overheating

Protection units and PTC probes, with or without fault memory TeSys LT3	From 90 to 170 °C		B11/17

Electronic over current relays - For machine protection

Predefined or adjustable starting times, Manual reset	From 1.5 to 34 A		B11/19
Automatic, electric or manual reset	From 0.5 to 50 A		B11/19

Technical Data for Designers B11/21

Protection components

TeSys LRK thermal overload relays, adjustable from 0.11 to 16 A

Overload relays

PF526226.tif



LR2 K0307

3-pole relays with screw clamp terminals

These overload relays are designed for the protection of motors. They are compensated and phase failure sensitive. Resetting can either be manual or automatic.
Direct mounting: under the contactor for versions with screw clamp terminals only; pre-wired terminals, see pages B11/28 and B11/30.
Separate mounting: using terminal block LA7 K0064 (see below).
On the front face of the overload relay:
- selection of reset mode: Manual (marked H) or Automatic (marked A),
- red pushbutton: Trip Test function,
- blue pushbutton: Stop and manual Reset,
- yellow trip flag indicator: overload relay tripped.

Protection by magnetic circuit breaker GV2 LE, see pages A6/11 and A6/20.

Class 10 A (the standard specifies a tripping time of between 2 and 10 seconds at 7.2 In)

Relay setting range	Fuses to be used with selected relay Maximum rating Type			Reference
	aM	gG	BS88	
A	A	A	A	
0.11…0.16	0.25	0.5	–	**LR2K0301**
0.16…0.23	0.25	0.5	–	**LR2K0302**
0.23…0.36	0.5	1	–	**LR2K0303**
0.36…0.54	1	1.6	–	**LR2K0304**
0.54…0.8	1	2	–	**LR2K0305**
0.8…1.2	2	4	6	**LR2K0306**
1.2…1.8	2	6	6	**LR2K0307**
1.8…2.6	4	8	10	**LR2K0308**
2.6…3.7	4	10	16	**LR2K0310**
3.7…5.5	6	16	16	**LR2K0312**
5.5…8	8	20	20	**LR2K0314**
8…11.5	10	25	20	**LR2K0316**
10…14	16	32	25	**LR2K0321**
12…16	20	40	32	**LR2K0322**

Characteristics: pages B11/28 and B11/30
Dimensions: page B11/30
Schemes: page B11/30

Protection components

TeSys LRK thermal overload relays, adjustable from 0.11 to 16 A

Overload relays

812559.tif

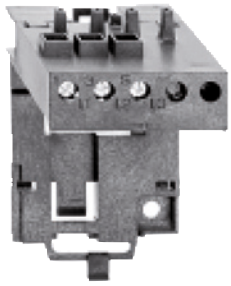

LA7 K0064

Overload relays for unbalanced loads

Class 10 A: to order, replace the prefix **LR2** by **LR7** in the references selected from above (only applicable to overload relays **LR2 K0305** to **LR2 K0322**).
Example: **LR7 K0308**.

Accessory

Description	Type of connection	Reference
Terminal block for separate clip-on mounting of the overload relay on 35 mm ⎓ rail	Screw clamp	**LA7K0064**

TeSys protection components
TeSys LRD, 3-pole thermal overload relays

Overload relays



LRD ●●



LRD 3●●

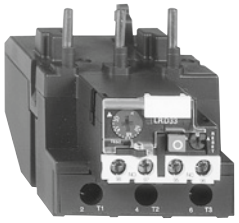

LRD 33●●



LRD 3●●6

Differential thermal overload relays for screw clamp connectors and lugs
for use with fuses or magnetic circuit breakers GV2 L and GV3 L

- Compensated relays with manual or automatic reset
- with relay trip indicator
- for a.c. or d.c.

Relay setting range (A)	Fuses to be used with selected relay aM (A)	gG (A)	BS88 (A)	For use with contactor LC1	Reference	Weight kg
Class 10 A (1) for connection by screw clamp terminals or connectors						
0.10…0.16	0.25	2	–	D09…D38	**LRD01**	0.124
0.16…0.25	0.5	2	–	D09…D38	**LRD02**	0.124
0.25…0.40	1	2	–	D09…D38	**LRD03**	0.124
0.40…0.63	1	2	–	D09…D38	**LRD04**	0.124
0.63…1	2	4	–	D09…D38	**LRD05**	0.124
1…1.6	2	4	6	D09…D38	**LRD06**	0.124
1.6…2.5	4	6	10	D09…D38	**LRD07**	0.124
2.5…4	6	10	16	D09…D38	**LRD08**	0.124
4…6	8	16	16	D09…D38	**LRD10**	0.124
5.5…8	12	20	20	D09…D38	**LRD12**	0.124
7…10	12	20	20	D09…D38	**LRD14**	0.124
9…13	16	25	25	D12…D38	**LRD16**	0.124
12…18	20	35	32	D18…D38	**LRD21**	0.124
16…24	25	50	50	D25…D38	**LRD22**	0.124
23…32	40	63	63	D25…D38	**LRD32**	0.124
30…38	40	80	80	D32 and D38	**LRD35**	0.124
Class 10 A (1) for connection by EverLink® BTR screw connectors (3)						
9…13	16	25	25	D40A…D65A	**LRD313**	0.375
12…18	20	32	35	D40A…D65A	**LRD318**	0.375
17…25	25	50	50	D40A…D65A	**LRD325**	0.375
23…32	40	63	63	D40A…D65A	**LRD332**	0.375
30…40	40	80	80	D40A…D65A	**LRD340**	0.375
37…50	63	100	100	D40A…D65A	**LRD350**	0.375
48…65	63	100	100	D50A and D65A	**LRD365**	0.375
Class 10 A (1) for connection by screw clamp terminals or connectors						
17…25	25	50	50	D80 and D95	**LRD3322**	0.510
23…32	40	63	63	D80 and D95	**LRD3353**	0.510
30…40	40	100	80	D80 and D95	**LRD3355**	0.510
37…50	63	100	100	D80 and D95	**LRD3357**	0.510
48…65	63	100	100	D80 and D95	**LRD3359**	0.510
55…70	80	125	125	D80 and D95	**LRD3361**	0.510
63…80	80	125	125	D80 and D95	**LRD3363**	0.510
80…104	100	160	160	D80 and D95	**LRD3365**	0.510
80…104	125	200	160	D115 and D150	**LRD4365**	0.900
95…120	125	200	200	D115 and D150	**LRD4367**	0.900
110…140	160	250	200	D150	**LRD4369**	0.900
80…104	100	160	160	(2)	**LRD33656**	1.000
95…120	125	200	200	(2)	**LRD33676**	1.000
110…140	160	250	200	(2)	**LRD33696**	1.000

Class 10 A (1) for connection by lugs

Select the appropriate overload relay with screw clamp terminals or connectors from the table above and add one of the following suffixes:

- figure **6** for relays LRD 01 to LRD 35 and relays LRD 313 to LRD 365.
- **A66** for relays LRD 3322 to LRD 3363.

Relays LRD 43●● are suitable, as standard, for use with lug-clamps.

Thermal overload relays for use with unbalanced loads

Class 10 A (1) for connection by screw clamp terminals or lugs

In the references selected above, change the prefix **LRD** (except **LRD 4●●●**) to **LR3 D**.
Example: **LRD 01** becomes **LR3 D01**.
Example with **Ever**Link®connectors: **LRD 340** becomes **LR3 D340**.
Example with lugs: **LRD 3406** becomes **LR3 D3406**.

(1) Standard IEC 60947-4-1 specifies a tripping time for 7.2 times the setting current I_R: class 10 A: between 2 and 10 seconds.
(2) Independent mounting of the contactor.
*(3) BTR screws: hexagon socket head. In accordance with local electrical wiring regulations, a size 4 insulated Allen key must be used (reference **LAD ALLEN4**, see page B8/21).*

Characteristics: pages B11/32 to B11/34
Dimensions: pages B11/35 to B11/37
Schemes: page B11/37

TeSys protection components
TeSys LRD, 3-pole thermal overload relays

Overload relays

PF526204.eps



LRD ●●3

Differential thermal overload relays for spring terminals
for use with fuses or magnetic circuit breakers GV2 L and GV3 L

- Compensated relays with manual or automatic reset
- with relay trip indicator
- for a.c. or d.c.

Relay setting range (A)	Fuses to be used with selected relay aM (A)	gG (A)	BS88 (A)	For use with contactor LC1	Reference
Classes 10 A [1] for connection by spring terminals (only for direct mounting beneath the contactor)					
0.10…0.16	0.25	2	–	D09…D38	**LRD013**
0.16…0.25	0.5	2	–	D09…D38	**LRD023**
0.25…0.40	1	2	–	D09…D38	**LRD033**
0.40…0.63	1	2	–	D09…D38	**LRD043**
0.63…1	2	4	–	D09…D38	**LRD053**
1…1.6	2	4	6	D09…D38	**LRD063**
1.6…2.5	4	6	10	D09…D38	**LRD073**
2.5…4	6	10	16	D09…D38	**LRD083**
4…6	8	16	16	D09…D38	**LRD103**
5.5…8	12	20	20	D09…D38	**LRD123**
7…10	12	20	20	D09…D38	**LRD143**
9…13	16	25	25	D12…D38	**LRD163**
12…18	20	35	32	D18…D38	**LRD213**
16…24	25	50	50	D25…D38	**LRD223**
Class 10 A with connection by EverLink® BTR screw connectors [2] and control by spring terminals					
9…13	16	25	25	D40A…D65A	**LRD3133**
12…18	20	32	35	D40A…D65A	**LRD3183**
17…25	25	50	50	D40A…D65A	**LRD3253**
23…32	40	63	63	D40A…D65A	**LRD3323**
30…40	40	80	80	D40A…D65A	**LRD3403**
37…50	63	100	100	D40A…D65A	**LRD3503**
48…65	63	100	100	D50A and D65A	**LRD3653**

Thermal overload relays for use with unbalanced loads
Classes 10 A [1] for connection by BTR screw connectors [2] and control by spring terminals

In the references selected above, replace **LRD 3** with **LR3 D3**.
Example: **LRD 3653** becomes **LR3 D3653**.

Thermal overload relays for use on 1000 V supplies
Classes 10 A [1] for connection by screw clamp terminals

For relays LRD 06 to LRD 35 only, for an operating voltage of 1000 V, and only for independent mounting, the reference becomes **LRD 33●●A66**.
Order an **LA7 D3064** terminal block separately, see page B11/9.

Standard relay	Relay for 1000 V network
LRD06	LRD3306A66
LRD07	LRD3307A66
LRD08	LRD3308A66
LRD10	LRD3310A66
LRD12	LRD3312A66
LRD14	LRD3314A66
LRD16	LRD3316A66
LRD21	LRD3321A66
LRD22	LRD3322A66
LRD32	LRD3353A66
LRD35	LRD3355A66

(1) Standard IEC 60947-4-1 specifies a tripping time for 7.2 times the setting current I_R: class 10 A: between 2 and 10 seconds.
*(2) BTR screws: hexagon socket head. In accordance with local electrical wiring regulations, a size 4 insulated Allen key must be used (reference **LAD ALLEN4**, see page B8/21).*

Overload relays

Characteristics: pages B11/32 to B11/34
Dimensions: pages B11/35 to B11/37
Schemes: page B11/37

TeSys protection components
TeSys LRD, thermal overload relays

Overload relays

PB113030_S_30.eps



LRD 04L...LRD 32L

Differential thermal overload relays for screw clamp connectors and lugs
for use with fuses or magnetic circuit breakers GV2 L and GV3 L

- Compensated relays with manual or automatic reset
- with relay trip indicator
- for a.c. or d.c.

Relay setting range (A)	Fuses to be used with selected relay aM (A)	gG (A)	BS88 (A)	For use with contactor LC1	Reference
Classes 20 (1) for connection by screw clamp terminals					
0.4...0.63	1	2	-	D09…D38	**LRD04L**
0.63...1	2	4	-	D09…D38	**LRD05L**
1...1.6	2	4	6	D09…D38	**LRD06L**
1.6...2.5	4	6	10	D09…D38	**LRD07L**
2.5...4	6	10	16	D09…D38	**LRD08L**
4...6	8	16	16	D09…D38	**LRD10L**
5.5...8	12	20	20	D09…D38	**LRD12L**
7...10	12	20	20	D09…D38	**LRD14L**
9...13	16	25	25	D12…D38	**LRD16L**
12...18	20	35	32	D18…D38	**LRD21L**
17...24	25	50	50	D25…D38	**LRD22L**
23...32	40	63	63	D25…D38	**LRD32L**
Class 20 (1) for connection by EverLink® BTR screw connectors (2)					
9…13	20	32	35	D40A…D65A	**LRD313L**
12…18	25	40	40	D40A…D65A	**LRD318L**
17…25	32	50	50	D40A…D65A	**LRD325L**
23…32	40	63	63	D40A…D65A	**LRD332L**
30…40	50	80	80	D40A…D65A	**LRD340L**
37…50	63	100	100	D40A…D65A	**LRD350L**
48…65	80	125	125	D50A and D65A	**LRD365L**
Classes 20 (1) for connection by screw clamp terminals					
17…25	32	50	50	D80 and D95	**LR2D3522**
23…32	40	63	63	D80 and D95	**LR2D3553**
30…40	40	100	80	D80 and D95	**LR2D3555**
37…50	63	100	100	D80 and D95	**LR2D3557**
48…65	80	125	100	D80 and D95	**LR2D3559**
55…70	100	125	125	D80 and D95	**LR2D3561**
63…80	100	160	125	D80 and D95	**LR2D3563**

PF5262201.eps



LRD 3●●L

PF526206.eps

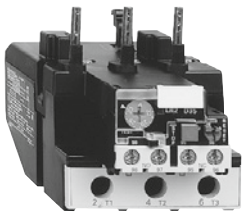

LR2 D35●●

Class 20 (1) for connection by lugs

For relays LRD 04L to LRD 32L and relays LRD 313L to LRD 365L, select the appropriate overload relay with screw clamp terminals or connectors from the table above and add the suffixe **6**.
Example: **LRD 04L** becomes **LRD 04L6**.

Thermal overload relays for use with unbalanced loads

Class 20 (1) for connection by screw clamp terminals or lugs

For relays LRD 04L to LRD 32L and relays LR2 D3522 to LR2 D3563, select the appropriate overload relay with screw clamp terminals or connectors from the table above and change the prefix LRD or LR2 D to **LR3 D**.
Example: **LRD 04L** becomes **LR3D 04L**.

(1) Standard IEC 60947-4-1 specifies a tripping time for 7.2 times the setting current I_R:
class 20: between 6 and 20 seconds
*(2) BTR screws: hexagon socket head. In accordance with local electrical wiring regulations, a size 4 insulated Allen key must be used (reference **LAD ALLEN4**, see page B8/21).*

Characteristics: pages B11/32 to B11/34
Dimensions: pages B11/35 to B11/37
Schemes: page B11/37

TeSys protection components
TeSys LRD, thermal overload relays

Overload relays

Differential thermal overload relays for screw clamp connectors and springs
for use with fuses or magnetic circuit breakers GV2 L and GV3 L

- Compensated relays with manual or automatic reset
- with relay trip indicator
- for a.c. or d.c.

Relay setting range (A)	Fuses to be used with selected relay aM (A)	gG (A)	BS88 (A)	For mounting beneath contactor LC1	Reference
Class 20 (1) with connection by EverLink® BTR screw connectors (2) and control by spring terminals					
9…13	20	32	35	D40A…D65A	**LRD313L3**
12…18	25	40	40	D40A…D65A	**LRD318L3**
17…25	32	50	50	D40A…D65A	**LRD325L3**
23…32	40	63	63	D40A…D65A	**LRD332L3**
30…40	50	80	80	D40A…D65A	**LRD340L3**
37…50	63	100	100	D40A…D65A	**LRD350L3**
48…65	80	125	125	D50A and D65A	**LRD365L3**

Differential thermal overload relays for bars and connectors
for use with fuses or magnetic circuit breakers NSX

- Compensated relays, with relay trip indicator
- for a.c.
- for direct mounting on contactor or independent mounting (3).

Relay setting range (A)	Fuses to be used with selected relay aM (A)	gG (A)	For mounting beneath contactor LC1	Reference
Classes 10 or 10A (1) for connection using bars or connectors				
60…100	100	160	D115 and D150	**LR9D5367**
90…150	160	250	D115 and D150	**LR9D5369**
Classes 20 (1) for connection using bars or connectors				
60…100	125	160	D115 and D150	**LR9D5567**
90…150	200	250	D115 and D150	**LR9D5569**

(1) Standard IEC 60947-4-1 specifies a tripping time for 7.2 times the setting current I_R:
class 10: between 4 and 10 seconds,
class 10 A: between 2 and 10 seconds,
class 20: between 6 and 20 seconds
*(2) BTR screws: hexagon socket head. In accordance with local electrical wiring regulations, a size 4 insulated Allen key must be used (reference **LAD ALLEN4**, see page B8/21).*
(3) Power terminals can be protected against direct finger contact by the addition of shrouds and/or insulated terminal blocks, to be ordered separately (see page B8/20).

Other versions

Thermal overload relays for resistive circuits in category AC-1.
Please consult your Regional Sales Office.

Overload relays

Characteristics: pages B11/32 to B11/34, pages B11/38 to B11/39
Dimensions: pages B11/35 to B11/37 and B11/42
Schemes: pages B11/39 and B11/43

DB415911.eps

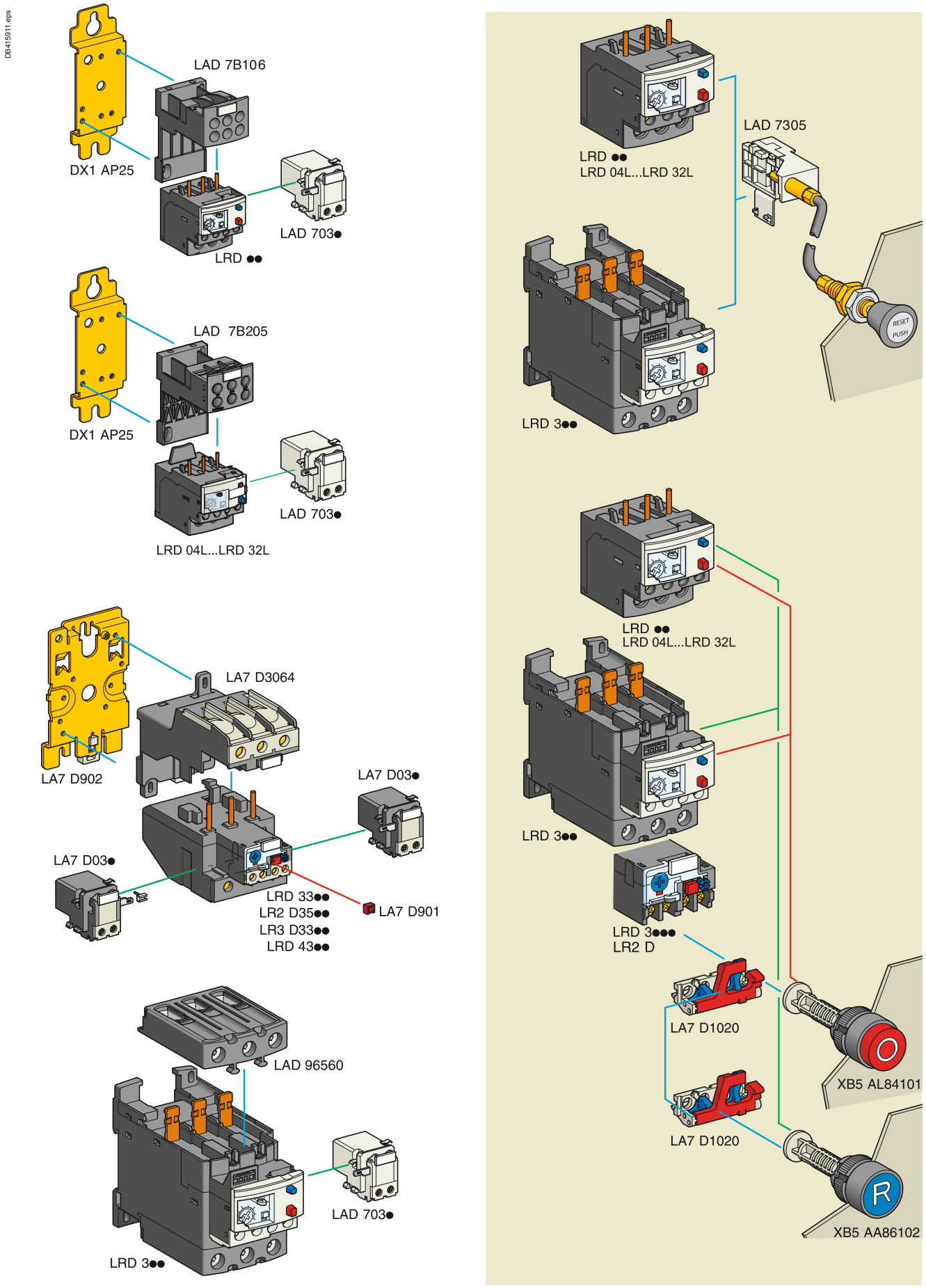

Schneider Electric

TeSys protection components
TeSys LRD, thermal overload relays
Accessories

Overload relays

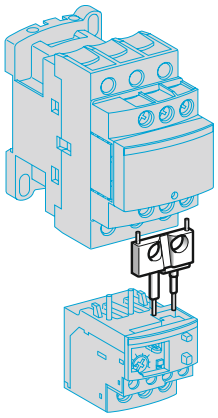

LAD 7C●

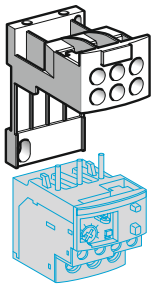

LAD 7B106

LAD 96570

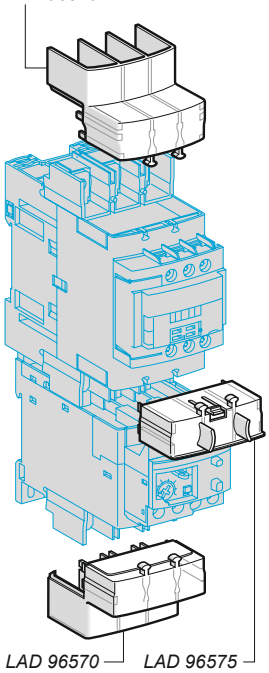

LAD 96570 *LAD 96575*

Separate components for relays

Description	For use with	Sold in lots of	Unit reference
Pre-wiring kit allowing direct connection of the N/C contact of relay LRD 01…35 or LR3 D01…D35 to the contactor	LC1 D09…D18	10	**LAD7C1** (1)
	LC1 D25…D38	10	**LAD7C2** (1)
Terminal block (2) for clip-on mounting on 35 mm rail (AM1 DP200) or screw fixing; for fixing centres, see pages B11/35 to B11/37	LRD 01…35 and LR3 D01…D35	1	**LAD7B106**
	LRD04L...LRD32L, LR3D04L...LR3D32L	1	**LAD7B205**
	LRD 43●●, LRD 33●●●, LR3 D33●●●, LR2 D35●●	1	**LA7D3064** (3)
EverLink® terminal block for independent mounting	LRD 3●●, LRD 3●●L and LR3 D3●●	1	**LAD96560**
Size 4 Allen key, insulated , 1000 V	LRD 3●●, LRD 3●●L and LR3 D3●●	5	**LADALLEN4**
Terminal block adapter for mounting a relay beneath an LC1 D115 or D150 contactor	LRD 3●●, LR3 D3●●●, LRD 35●●	1	**LA7D3058** (3)
Mounting plates (4) for screw fixing on 110 mm centres	LRD 01…35, LR3 D01…D35, LRD04L...LRD32L, LR3D04L... LR3D32L	10	**DX1AP25**
	LRD 3●●●, LR3 D3●●●, LR2 D35●●	1	**LA7D902**
Marker holders, snap-in 8 x 18 mm	LRD 3●●	100	**LAD90**
	All relays except LRD 01…35, LRD 04L...32L, LR3D04L...D32L LR3 D01…D35, LRD 3●●, LRD 3●●L and LR3 D3●●	100	**LA7D903**
Bag of 400 blank legends (self-adhesive, 7 x 16 mm)	All relays	1	**LA9D91**
Stop button locking device	All relays except LRD 01…35, LRD 04L...32L, LR3D04L...D32L LR3 D01…D35, LR9 D and LRD 313…LRD 365	10	**LA7D901**
Remote Stop or electrical reset device (5)	LRD 01…35, LR3 D01…D35, LRD 04L...32L, LR3D04L...D32L and LRD 313…LRD 365	1	**LAD703●** (6) (7)
Remote tripping or electrical reset device (5)	All relays except LRD 01…35, LRD 04L...32L, LR3D04L...D32L, LR3 D01…D35, LRD 3●●, LRD 3●●L and LR3 D3●●	1	**LA7D03●** (6)
Block of insulated terminals	LR9 D	2	**LA9F103**
IP 20 cover for lug type terminals for independent mounting	LRD 3136…3656	1	**LAD96570**
IP 20 cover for lug type terminals for mounting with contactor LC1 D40A6…D65A6	LRD 3136…3656	1	**LAD96575**
Terminal block for lug type terminals for independent mounting	LRD 3136…3656	1	**LAD96566**

Remote control

"Reset" function

Description	For use with	Sold in lots of	Unit reference
By flexible cable (length = 0.5 m)	LRD 01…35, LR3 D01…D35, LR3D04L...D32L and LRD 313…LRD 365, LRD 04L...LRD 32L	1	**LAD7305** (7)
	All relays except LRD 01...35, LR3 D01...D35, LRD 3●●, LRD 04L...32L, LR3D04L...D32L, LRD 3●●L and LR3 D3●●	1	**LA7D305**

"Stop" and/or "Reset" functions

The terminal protection shroud must be removed and the following 3 products must be ordered separately:

Adapter for door mounting	LRD 33●●, LR2 D		1	**LA7D1020**
Operating heads for spring return pushbutton	Stop	All relays	1	**XB5AL84101**
	Reset	All relays	1	**XB5AA86102**

(1) These pre-wiring kits cannot be used with reversing contactors.
(2) Terminal blocks are supplied with terminals protected against direct finger contact and screws in the open, "ready-to-tighten" position.
*(3) To order a terminal block for connection by lugs, the reference becomes **LA7 D30646**.*
(4) Remember to order the terminal block corresponding to the type of relay.
*(5) The time for which the coil of remote tripping or electrical resetting device **LA7 D03** or **LAD 703** can remain energised depends on its rest time: 1 s pulse duration with 9 s rest time; 5 s pulse duration with 30 s rest time; 10 s pulse duration with 90 s rest time; maximum pulse duration 20 s with a rest time of 300 s. Minimum pulse time: 200 ms.*
(6) Reference to be completed by adding the code indicating the control circuit voltage.
Standard control circuit voltages (for other voltages, please consult your Regional Sales Office):

Volts	12	24	48	96	110	220/230	380/400	415/440
50/60 Hz	–	B	E	–	F	M	Q	N
Consumption, inrush and sealed: < 100 VA								
⎓	J	B	E	DD	F	M	–	–
Consumption, inrush and sealed: < 100 W.								

(7) Not compatible with 3-pole relays fitted with spring terminals.

Protection components
TeSys LR9D, electronic thermal overload relays

Overload relays

PB114690R.eps

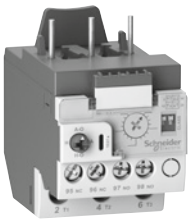

LR9D0● and LR9D32

PB114691R.eps



LR9D110S

PB108399R.eps



LR9D5597

PB113031R.eps



LAD7B205

PB114692R.eps



LAD7B205 mounted on LR9D01

PG111268_SE.eps



LR9D67

Electronic thermal overload relays
For use with fuses or magnetic circuit breakers

- compensated relays, with relay trip indicator,
- for a.c.,
- for direct mounting on contactor or independent mounting (1).

Relay setting range	Fuses to be used with selected relay		For direct mounting beneath contactor LC1	Reference
	aM	gG		
A	A	A		
Classes 5.10.20.30 (1) selectable for direct connection on TeSys D contactors or connection using connectors				
0.1...0.5			D09…D38	**LR9D01**
0.4...2			D09…D38	**LR9D02**
1.6…8			D09…D38	**LR9D08**
6.4…32			D09…D38	**LR9D32**
Classes 5.10.20.30 (1) selectable for connection using connectors				
22…110				**LR9D110S**
Classes 10 or 10 A (1) for connection using bars or connectors				
60…100	100	160	D115…D150	**LR9D5367**
90…150	160	250	D115…D150	**LR9D5369**
Classes 20 (1) for connection using bars or connectors				
60…100	125	160	D115…D150	**LR9D5567**
90…150	200	250	D115…D150	**LR9D5569**

Separate components for relays

Description	For use with	Sold in lots of	Unit reference
Terminal block (2) For clips-on mounting on 35 mm rails (AM1 DP200) or screws fixing; for fixing centres, see pages B11/35 to B11/37	LR9D01, LR9D02, LR9D08, LR9D32	1	**LAD7B205**

Electronic overload relays for balanced or unbalanced loads

Relay setting range	Fuses to be used with selected relay		For direct mounting beneath contactor LC1	Reference
	aM	gG		
A	A	A		
Classes 10 or 20 (1) selectable for direct connection using bars or connectors				
60…100	100	160	D115…D150	**LR9D67**
90…150	160	250	D115…D150	**LR9D69**

(1) Standard IEC 60947-4-1 specifies a tripping time for 7.2 times the setting current I_R:
class 5: between 0.5 and 5 seconds
class 10: between 4 and 10 seconds
class 10 A: between 2 and 10 seconds
class 20: between 6 and 20 seconds
class 30: between 9 and 30 seconds
(2) Terminal blocks are supplied with terminals protected against direct finger contact and screws in the open, "ready-to-tighten" position.
(3) Power terminals can be protected against direct finger contact by the addition of shrouds and/or insulated terminal blocks, to be ordered separately (see page B8/20).

Presentation, characteristics: pages B11/38 to B11/39
Dimensions: page B11/42
Schemes: page B11/43

Protection components

TeSys LR9 F electronic thermal overload relays

Overload relays



LR9 F53●●



LR9 F73●●

Compensated and differential overload relays

Thermal overload relays:
- compensated and differential,
- with relay trip indicator,
- for a.c.,
- for direct mounting on contactor or independent mounting (1).

Relay setting range	Fuses to be used with selected relay		For direct mounting beneath contactor LC1	Reference	Weight
	aM	gG			
A	A	A			kg
Class 10 (2)					
30…50	50	80	F115…F185	**LR9F5357**	0.885
48…80	80	125	F115…F185	**LR9F5363**	0.900
60…100	100	200	F115…F185	**LR9F5367**	0.900
90…150	160	250	F115…F185	**LR9F5369**	0.885
132…220	250	315	F185…F400	**LR9F5371**	0.950
200…330	400	500	F225…F500	**LR9F7375**	2.320
300…500	500	800	F225…F500	**LR9F7379**	2.320
380…630	630	800	F400…F630 and F800	**LR9F7381**	4.160
Class 20 (2)					
30…50	50	80	F115…F185	**LR9F5557**	0.885
48…80	80	125	F115…F185	**LR9F5563**	0.900
60…100	100	200	F115…F185	**LR9F5567**	0.900
90…150	160	250	F115…F185	**LR9F5569**	0.885
132…220	250	315	F185…F400	**LR9F5571**	0.950
200…330	400	500	F225…F500	**LR9F7575**	2.320
300…500	500	800	F225…F500	**LR9F7579**	2.320
380…630	630	800	F400…F630 and F800	**LR9F7581**	4.160

*(1) When mounting overload relays up to size **LR9 F5371** directly beneath the contactor, they may be additionally supported by a mounting plate (see page B11/14). Above this size it is always necessary to use the mounting plate.*
Power terminals can be protected against direct finger contact by the addition of shrouds and/or insulated terminal blocks, to be ordered separately (see page B11/14).
(2) Standard IEC 60947-4 specifies a tripping time for 7.2 times the setting current In:
- class 10: between 4 and 10 seconds,
- class 20: between 6 and 20 seconds.

Protection components

TeSys LR9 F electronic thermal overload relays

Overload relays


PF526266.tif

LR9 F57

Compensated overload relays, class 10 or 20 with alarm

Thermal overload relays:
- compensated,
- with relay trip indicator,
- for a.c.,
- for direct mounting on contactor or independent mounting (1),
- class 10 or 20 by selector switch,
- protection of 3-phase or single-phase circuits by selector switch,
- with alarm function that enables tripping to be forestalled.

Relay setting range	Fuses to be used with selected relay		For direct mounting beneath contactor LC1	Reference	Weight
	aM	gG			
A	A	A			kg
30…50	50	80	F115…F185	**LR9F57**	0.885
48…80	80	125	F115…F185	**LR9F63**	0.900
60…100	100	200	F115…F185	**LR9F67**	0.900
90…150	160	250	F115…F185	**LR9F69**	0.885
132…220	250	315	F185…F400	**LR9F71**	0.950
200…330	400	500	F225…F500	**LR9F75**	2.320
300…500	500	800	F225…F500	**LR9F79**	2.320
380…630	630	800	F400…F630 and F800	**LR9F81**	4.160

*(1) When mounting overload relays up to size **LR9 F71** directly beneath the contactor, they may be additionally supported by a mounting plate (see page B11/14). Above this size it is always necessary to use the mounting plate.*
Power terminals can be protected against direct finger contact by the addition of shrouds and/or insulated terminal blocks, to be ordered separately (see page B11/14).

Presentation: page B11/44
Characteristics: pages B11/45 to B11/47
Dimensions, schemes: pages B11/48 to B11/49

Protection components

TeSys LR9 F electronic thermal overload relays,

Accessories (to be ordered separately)

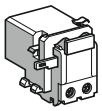

LA7 D03●

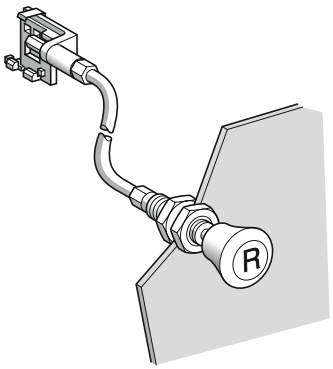

LA7 D305

Control accessories

Description		Sold in lots of	Unit reference
Remote electrical reset device (1)		1	**LA7D03●** (2)
Remote Reset function control by flexible cable (length = 0.5 m)		1	**LA7D305**
Remote Stop and/or Reset function control	Adapter for door mounted operator	1	**LA7D1020**
	Rod (snap-off end to obtain required length, between 17 and 120 mm)	10	**ZA2BZ13**
	Operating head for spring return pushbutton	1	**ZA2B●●●●** (3)

Connection accessories

For mounting an LR9 F5●71 thermal overload relay together with an LC1 F185 contactor

Description	Reference
Set of 3 busbars	**LA7F407**

For mounting a thermal overload relay beneath a reversing contactor or star-delta contactors

Application		Width of terminal lug	Set of 3 busbars Reference
For relay	For contactor		
		mm	
LR9 F5●57, F5●63, F5●67, F5●69, F69, F71	LC1 F115	15	**LA7F401**
LR9 F5●57, F5●63	LC1 F150, F185	20	**LA7F402**
LR9 F5●71, LR9 F71	LC1 F185	25	**LA7F407**
LR9 F5●71, LR9 F71	LC1 F225, F265	25	**LA7F403**
LR9 F7●75, F7●79, LR9 F75, F79	LC1 F225...F400	25	**LA7F404**
LR9 F7●81, LR9 F81	LC1 F400	25	**LA7F404**
LR9 F7●75, F7●79, F7●81, LR9 F75, F79, F81	LC1 F500	30	**LA7F405**
LR9 F7●81, LR9 F81	LC1 F630, F800	40	**LA7F406**

*(1) The time for which the coil of remote electrical reset device **LA7 D03** can remain energised depends on its rest time: 1 s pulse duration with 9 s rest time; 5 s pulse duration with 30 s rest time; 10 s pulse duration with 90 s rest time. Maximum pulse duration of 20 s with rest time of 300 s. Minimum pulse time: 200 ms.*

(2) Reference to be completed by adding the coil voltage code.
Standard control circuit voltages,
(for other voltages, please consult your Regional Sales Office):

Volts	12	24	48	96	110	220/ 230	380/ 400	415/ 440
∼ **50/60 Hz**	–	B	E	–	F	M	Q	N
Consumption, inrush and sealed: < 100 VA								
⎓	J	B	E	DD	F	M	–	–
Consumption, inrush and sealed: < 100 W.								

*(3) Stop: **ZA2 BL432** and Reset: **ZA2 BL639**.*

Protection components

TeSys LR9 F electronic thermal overload relays,

Accessories (to be ordered separately)

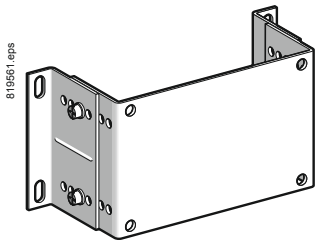

LA7 F90●

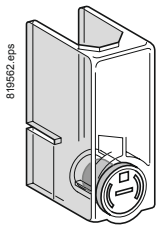

LA9 F70●

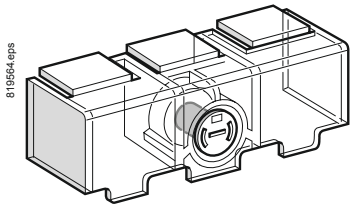

LA7 F70●

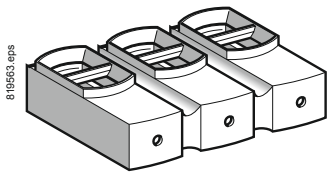

LA9 F103

Mounting plates for overload relay

For use with relays	Reference
LR9 F5●57, F5●63, F5●67, F5●69, F5●71, LR9 F57, F63, F67, F69, F71	**LA7F901**
LR9 F7●75, F7●79, F7●81, LR9 F75, F79, F81	**LA7F902**

Sets of power terminal protection shrouds, single-pole

For use with relays	Number of shrouds per set	Set reference
LR9 F5●57, LR9 F57	6	**LA9F701**
LR9 F5●63, F5●67, F5●69, LR9 F63, F67, F69	6	**LA9F702**
LR9 F5●71, LR9 F71	6	**LA9F705**
LR9 F7●75, F7●79, F7●81, LR9 F75, F79, F81	6	**LA9F703**

Power terminal protection shrouds, 3-pole

For use with relays	Reference
LR9 F5●57, F5●63, F5●67, F5●69, LR9 F57, F63, F67, F69	**LA7F701**
LR9 F5●71, LR9 F71	**LA7F702**
LR9 F7●75, F7●79, F7●81, LR9 F75, F79, F81	**LA7F703**

Insulated terminal blocks

For use with relays	Set of 2 blocks Reference
LR9 F5●57, F5●63, F5●67, F5●69, LR9 F57, F63, F67, F69	**LA9F103**

Marking accessories

Description	Sold in lots of	Unit reference
Clip-in marker holder	100	**LA7D903**
Bag of 400 blank self-adhesive legends 7 x 16 mm	1	**LA9D91**

Protection components

TeSys RM1 single-pole magnetic over current relays

Overload relays

DF533558.tif



RM1 XA001

Non-latching

With 1 C/O contact block, non-latching

Recommanded operating range (motor In)		Setting range (trip current)	Maximum continuous current ~ or ⎓	Reference
A		A	A	
~ or ⎓	0.7…1.15	1.25…4	1.6	**RM1XA001**
	1.16…1.8	2…6.3	2.5	**RM1XA002**
	1.9…2.9	3.2…10	4	**RM1XA004**
	3…4.6	5…16	6.3	**RM1XA006**
	4.7…7.2	8…25	10	**RM1XA010**
	7.3…11.5	12.5…40	16	**RM1XA016**
	11.6…18	20…63	25	**RM1XA025**
	18.1…29	32…100	40	**RM1XA040**
	29.1…46	50…160	63	**RM1XA063**
	46.1…72	80…250	100	**RM1XA100**
	73…115	125…400	160	**RM1XA160**
	116…145	160…500	200	**RM1XA200**
	146…230	250…800	315	**RM1XA315**
	231…360	400 …1250	500	**RM1XA500**
~	361…630	630…2200	1000	**RM1XA101**
⎓	361…570	630…2000	1000	**RM1XA101**

Accessory (to be ordered separately)

Description	Reference
1 C/O contact block, non-latching	**RM1ZG21**

Overload relays

Characteristics: page B11/50
Dimensions: page B11/51
Schemes: page B11/51

Protection components

TeSys RM1 single-pole magnetic over current relays

Overload relays

DF533559.tif



RM1 XA0011

DF533560.tif

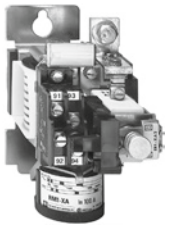

RM1 XA1001
+
ER1 XA2●

DF533561.tif



RM1 XA0011
+
RM1 ZH21

Latching with manual reset

With 1 C/O contact block, latching with manual reset

	Recommanded operating range (motor In)	Setting range (trip current)	Maximum continuous current ∼ or ⎓	Reference
	A	A	A	
∼ or ⎓	0.7…1.15	1.25…4	1.6	**RM1XA0011**
	1.16…1.8	2…6.3	2.5	**RM1XA0021**
	1.9…2.9	3.2…10	4	**RM1XA0041**
	3…4.6	5…16	6.3	**RM1XA0061**
	4.7…7.2	8…25	10	**RM1XA0101**
	7.3…11.5	12.5…40	16	**RM1XA0161**
	11.6…18	20…63	25	**RM1XA0251**
	18.1…29	32…100	40	**RM1XA0401**
	29.1…46	50…160	63	**RM1XA0631**
	46.1…72	80…250	100	**RM1XA1001**
	73…115	125…400	160	**RM1XA1601**
	116…145	160…500	200	**RM1XA2001**
	146…230	250…800	315	**RM1XA3151**
	231…360	400…1250	500	**RM1XA5001**
∼	361…630	630…2200	1000	**RM1XA1011**
⎓	361…570	630…2000	1000	**RM1XA1011**

Accessories (to be ordered separately)

Description	Reference
1 C/O contact block, latching	**RM1ZH21**
Electrical reset [1] (consumption: inrush, sealed: 500 VA) (fitted to the relay together with a latching contact block) Basic reference. Complete with code indicating control circuit voltage [2]	**ER1XA2●**

(1) The impulse duration must not exceed 2 seconds within 10 minute intervals.
(2) Standard coil voltages for electrical reset:

Volts	24	48	110	220	380
50 Hz	B	E	F	M	Q

Characteristics: page B11/50
Dimensions: page B11/51
Schemes: page B11/51

Protection components

TeSys LT3 thermistor protection units for use with PTC thermistor probes (1)

Overload relays

PF526261-24-M.tif



LT3 SE00M

PF526262-24-M.tif



LT3 SA00M

PF526263-24-M.tif



LT3 SM00M

Protection units (without fault memory)

Units with automatic reset with thermistor short-circuit detection

Connection	Voltage		Output contact	Reference
Cage connectors	∼ 50/60 Hz	115 V	N/C	**LT3SE00F**
		230 V	N/C	**LT3SE00M**
	⎓	24 V	N/C	**LT3SE00BD**

Units with automatic reset with thermistor short-circuit detection

On front panel: fault and voltage signalling indicator.

Connection	Voltage		Output contact	Reference
Cage connectors	∼ 50/60 Hz	115/230 V	N/C + N/O	**LT3SA00M**
	⎓	24/48 V	N/C + N/O	**LT3SA00ED**
	∼ 50/60 Hz or ⎓	24…230 V	2 C/O	**LT3SA00MW**

Protection units (with fault memory)

Units with manual reset with thermistor short-circuit detection

On front panel:
- fault and voltage signalling indicator,
- Test and Reset button.

Connection	Voltage		Output contact	Reference
Cage connectors	∼ 50/60 Hz	400 V	N/C + N/O	**LT3SM00V**
		24/48 V	N/C + N/O	**LT3SM00E**
		115/230 V	N/C + N/O	**LT3SM00M**
	⎓	24/48 V	N/C + N/O	**LT3SM00ED**
	∼ 50/60 Hz or ⎓	24…230 V	2 C/O	**LT3SM00MW**

(1) PTC: Positive Temperature Coefficient.

Overload relays

Characteristics: pages B11/52 to B11/55
Dimensions: page B11/56
Schemes: pages B11/56 and B11/57

Protection components

TeSys LT3 thermistor protection units for use with PTC thermistor probes (1)



DA1 TT●●●



DA1 TS●●●

PTC thermistor probes (1)

Description	Nominal Operating Temperature (NOT)	Colour	Sold in lots of	Unit reference
	° C			
Integrated triple probes	90	Green/green	10	**DA1TT090**
	110	Brown/brown	10	**DA1TT110**
	120	Grey/grey	10	**DA1TT120**
	130	Blue/blue	10	**DA1TT130**
	140	White/blue	10	**DA1TT140**
	150	Black/black	10	**DA1TT150**
	160	Blue/red	10	**DA1TT160**
	170	White/green	10	**DA1TT170**
Surface probes	60	White/grey	10	**DA1TS060**
	70	White/brown	10	**DA1TS070**
	80	White/white	10	**DA1TS080**
	90	Green/green	10	**DA1TS090**
	100	Red/red	10	**DA1TS100**

Accessories (to be ordered separately)

Mounting accessories

Description	Applicationi	Sold in lots of	Unit reference
Adapter	For fixing on ⊔ rail DZ5 MB	10	**RHZ66**

Marking accessories

Clip-in markers (maximum of 5 per unit)	Strips of 10 identical numbers (0 to 9)	25	**AB1R●** (2)
	Strips of 10 identical capital letters (A to Z)	25	**AB1G●** (2)

(1) PTC: Positive Temperature Coefficient.
(2) When ordering, replace the ● in the reference with the number or letter required.

TeSys protection components

TeSys LRD97, LT47 electronic over current relays

Overload relays

DF526329-40-M.tif



LR97 D07●●

LR97 D electronic over current relays

Relay setting range	Usable range (1)	For use with contactor (2)	Relay supply voltage	Reference (3)
A	A			
0.3…1.5	0.3…1.3	LC1 D09…D38	∼ 200…240 V	LR97D015M7
			∼ 100…120 V	LR97D015F7
			⎓/∼ 24 V	LR97D015B
			⎓/∼ 48 V	LR97D015E
1.2…7	1.2…6	LC1 D09…D38	∼ 200…240 V	LR97D07M7
			∼ 100…120 V	LR97D07F7
			⎓/∼ 24 V	LR97D07B
			⎓/∼ 48 V	LR97D07E
5…25	5…21	LC1 D09…D38	∼ 200…240 V	LR97D25M7
			∼ 100…120 V	LR97D25F7
			⎓/∼ 24 V	LR97D25B
			⎓/∼ 48 V	LR97D25E
20…38	20…34	LC1 D25…D38	∼ 200…240 V	LR97D38M7
			∼ 100…120 V	LR97D38F7
			⎓/∼ 24 V	LR97D38B
			⎓/∼ 48 V	LR97D38E

DF526330-40-M.tif



LT47 30●●●

LT47 electronic over current relays

Relay setting range	Usable range (1)	Relay supply voltage	Reference
A	A		
LT47 relay with manual/electric reset			
0.5…6	0.5…5	∼ 200…240 V	LT4706M7S
		∼ 100…120 V	LT4706F7S
		⎓/∼ 24 V	LT4706BS
		⎓/∼ 48 V	LT4706ES
3…30	3…25	∼ 200…240 V	LT4730M7S
		∼ 100…120 V	LT4730F7S
		⎓/∼ 24 V	LT4730BS
		⎓/∼ 48 V	LT4730ES
5…60	5…50	∼ 200…240 V	LT4760M7S
		∼ 100…120 V	LT4760F7S
		⎓/∼ 24 V	LT4760BS
		⎓/∼ 48 V	LT4760ES
LT47 relay with automatic reset			
0.5…6	0.5…5	∼ 200…240 V	LT4706M7A
		∼ 100…120 V	LT4706F7A
		⎓/∼ 24 V	LT4706BA
		⎓/∼ 48 V	LT4706EA
3…30	3…25	∼ 200…240 V	LT4730M7A
		∼ 100…120 V	LT4730F7A
		⎓/∼ 24 V	LT4730BA
		⎓/∼ 48 V	LT4730EA
5…60	5…50	∼ 200…240 V	LT4760M7A
		∼ 100…120 V	LT4760F7A
		⎓/∼ 24 V	LT4760BA
		⎓/∼ 48 V	LT4760EA

Accessories (to be ordered separately)

Description	For use with	Sold in lots of	Unit reference
Pre-wiring kits allowing connection of the LR97 D relay N/C contact directly to the contactor	LC1 D09…D18	10	LAD7C1
	LC1 D25…D38	10	LAD7C2
Terminal block for clip-on mounting on 35 mm rail (AM1 DP200)	LR97 D	1	LAD7B106

(1) To allow adjustment of the tripping sensitivity, see adjustment method (page B11/58).
(2) Please see chapter B8.
(3) If a pre-wiring kit is used, it is no longer possible to electrically wire signalling of tripped status.

TeSys LRx, RM1, LT

Technical Data for Designers

Contents

General ..... B11/22 to B11/27

TeSys LRK - thermal overload protection:
- > characteristics ..... B11/28 to B11/29
- > dimensions and schemes B11/30

TeSys LRD - thermal overload protection:
- > presentation and characteristics ..... B11/31 to B11/34
- > dimensions ..... B11/35 to B11/37
- > schemes B11/37

TeSys LR9D - electronic thermal overload protection:
- > presentation and characteristics ..... B11/38 to B11/41
- > dimensions B11/42
- > schemes B11/43

TeSys LR9 F - electronic thermal overload protection:
- > presentation and characteristics ..... B11/44 to B11/47
- > dimensions B11/48
- > schemes B11/49

TeSys RM1 - single pole magnetic over current relays:
- > presentation and characteristics B11/50
- > dimensions and schemes B11/51

TeSys LT3 - thermistor protection unit:
- > characteristics ..... B11/52 to B11/55
- > dimensions and schemes ..... B11/56 to B11/57

TeSys LR47, LT47 - electronic over current relays:
- > presentation B11/58
- > curves ..... B11/59 to B11/60
- > characteristics ..... B11/60 to B11/61
- > dimensions and schemes B11/62

Protection components
Motor and machine protection

Overload relays

Introduction

Exceeding the operating limits of an electric motor will lead, eventually, not only to destruction of the motor itself but also of the mechanisms it drives.

This type of load can be the cause of electrical or mechanical faults.
■ Electrical faults:
□ overvoltage, voltage drop, imbalance and phase failure which cause variations in the current drawn,
□ short-circuits which can cause the current to reach levels capable of destroying the load.

■ Mechanical faults:
□ locked rotor,
□ brief or prolonged overload which leads to an increase in the current drawn by the motor, and therefore overheating.

The cost of these faults must take into account loss of production, loss of raw materials, repair of the production tool, poor quality of production and delays in delivery.

These faults can also have dramatic consequences on the safety of persons in direct or indirect contact with the motor.

To prevent these faults, protection measures are necessary. They make it possible to isolate the equipment to be protected from the mains supply by measuring variations in electrical values (voltage, current, etc.).

Each motor starter must therefore have:

■ **short-circuit protection**, to detect and break, as quickly as possible, abnormal currents generally greater than 10 times the rated current (In).

■ **overload protection**, to detect increases in current up to about 10 In and switch off the starter before overheating of the motor and conductors damages the insulation.

This protection is provided by specific devices such as fuses, circuit breakers and thermal overload relays, or by more integrated devices offering several types of protection.

Overload relays

Causes, effects and consequences of various faults

There are two types of fault:
- Internal faults within the motor
- External faults: these are located outside the electric motor but their consequences can lead to damage inside the motor.

Faults	Causes	Effects	Consequences on the motor and on the machine
Short-circuit	Contact between several phases, or between one phase and neutral or between several turns of the same phase.	■ Current peak ■ Electrodynamic forces on the conductors	Destruction of windings
Overvoltage	■ Lightning ■ Electrostatic discharge ■ Operation	Dielectric breakdown in the windings	Destruction of the windings due to loss of insulation
Phase imbalance and phase failure	■ Opening of a phase ■ Single-phase load upstream of the motor ■ Short-circuit between the turns of the same winding	■ Reduction of usable torque, efficiency and speed ■ Increase in losses ■ Starting impossible if phase failure	Overheating (1)
High starting frequency	■ Failure of the automation system ■ Too many manual control operations ■ Numerous fault trips	High stator and rotor temperature rise due to the frequent start current	Overheating (1) Consequences on the process
Voltage variations	■ Instability of the mains voltage ■ Connection of heavy loads	■ Reduction of usable torque ■ Increase in losses	Overheating (1)
Harmonics	■ Pollution of the mains supply by variable speed drives, inverters, etc...	■ Reduction of usable torque ■ Increase in losses	Overheating (1)
Long starting time	■ Resistive torque too high (load too heavy) ■ Voltage drop	Increase in starting time	Overheating (1)
Jamming	■ Mechanical problem (crusher) ■ Seizures	Overcurrent	Overheating (1) Consequences on the process
No-load running	■ Pump running empty ■ Mechanical break in drive to the load	Drop in current drawn	Consequences on the process
Frequency fluctuations	■ Overload of a supply powered by limited independent sources ■ Faulty alternator speed regulator	■ Increase in losses ■ Interferes with synchronous devices (clock, recorder, ...)	–
Overload	■ Increase in resistive torque ■ Voltage drop ■ Drop in power factor	Increase in current consumption	Overheating (1)
Loss of machine excitation	■ Significant drop in excitation current ■ Break in rotor winding	■ Increase in active power ■ Drop in power factor	Significant overheating of rotor and cage
Phase-Earth fault	■ Accidental Phase-Earth contacts ■ Accidental Phase-machine casing contacts (casing connected to earth)	■ Overvoltage developed in the mains supply ■ Rise in earth potential (safety of persons)	Consequences on safety of persons

(1) Then, in the longer or shorter term, depending on the seriousness of the fault and/or its frequency, short-circuit and destruction of the windings.

Protection components
Motor and machine protection

Overload relays

DF526177-21-M.tif



LS1 D32
fuse carrier

DF526178-21-M.tif



GS2 N3
switch disconnectors

DF526179-22-M.tif



GV2 L
magnetic circuit-breraker

DF526180-22-M.tif



TeSys U LUB 12 starter with
LUCA●● control unit

Protection functions

Short-circuit protection

General

A short-circuit results in a very rapid rise in current which can reach several hundred times the value of the operational current. The consequences of a short-circuit are dangerous to both equipment and persons. It is therefore imperative to use protection devices to detect the fault and very quickly break the circuit.

Two types of protection are commonly used:
■ fuses (cutout) which break the circuit by melting, which then requires their replacement,
■ magnetic trip circuit breakers, often more simply called "magnetic circuit breakers", which only require re-setting to put them back into service.
Short-circuit protection can also be built-into multifunction devices such as motor circuit breakers and contactor-breakers.

The main characteristics of short-circuit protection devices are:
■ their breaking capacity: this is the highest prospective short-circuit current value that a protection device can break at a given voltage.
■ their making capacity: this is the highest current value that the protection device can make at its rated voltage in specified conditions.
The making capacity is equal to k times the breaking capacity.

Fuses (cutouts)

Fuses provide individual phase protection (single-pole), with a high breaking capacity in a compact size:
■ mounted either in fuse carriers,
■ or in isolators, replacing the original links or shunt bars.

For motor protection, aM type fuses are used. Their design characteristics allow them to conduct the high magnetising currents that occur when motors are switched on. They are therefore unsuitable for overload protection (unlike gG type fuses). This is why an overload relay must be included in the motor power supply circuit.

Magnetic circuit breakers

These circuit breakers protect installations against short-circuits, within the limit of their breaking capacity.
Magnetic circuit breakers provide omnipole breaking as standard.
For relatively low short-circuit currents, the operation of a circuit breaker is faster than that of fuses.
This protection conforms to standard IEC 60947-2.
The thermal and electrodymanic effects are also limited, therefore ensuring better protection of cables and equipment.

Protection components
Motor and machine protection

Overload relays

DF526181-30-M.tif



LRD 02
thermal overload relay

PF526182.tif



LRD 365
thermal overload relay

DF526183-21-M.tif



RM4 JA current measurement relay

PF526184.tif



TeSys U starter with "thermal overload alarm" function module

Protection functions

Overload protection

General

An overload condition is the most frequently encountered fault. The symptoms are a rise in the current drawn by the motor and thermal effects. A rapid return to normal operating conditions is important.
The actual operating conditions (ambient temperature, operating altitude and type of standard duty) are essential to determine the operating values of the motor (power, current) and to be able to select effective overload protection. These operational values are given by the motor manufacturer.

According to the level required, protection can be provided by:
- overload relays and thermal overload relays (bi-metallic or electronic type) which protect motors in the event of:
  - overload, by monitoring the current drawn by each phase,
  - phase imbalance or failure, by their differential mechanism.
- relays with PTC thermistor probes (Positive Temperature Coefficient).
- overtorque relays,
- multifunction relays.

Overload relays

These relays protect motors against overload. They must allow the temporary overload that occurs on starting and must only trip if the starting time is abnormally long.
The overload relay will be selected according to the length of the starting time (tripping class) and the motor rating.
These relays have a thermal memory (except for certain electronic overload relays, indicated by their manufacturers) and can be connected:
- either in series with the load,
- or to current transformers placed in series with the load.

Bi-metallic thermal overload relays
Combined with a contactor, these relays protect the line and the equipment against small and prolonged overloads. They must be protected against strong overcurrent by a circuit breaker or fuses.
These relays may be used on an a.c. or d.c. system and are generally:
- 3-pole,
- compensated, i.e. insensitive to ambient temperature variations,
- with manual or automatic reset,
- graduated with a "motor FLC" scale: allowing direct setting to the full load current as shown on the motor rating plate.

They can also be sensitive to phase failure: this is known as 'differential'. This function conforms to standards IEC 60947-4-1 and 60947-6-2
This type of relay is extremely reliable and is a relatively low cost device.

Electronic thermal overload relays
Electronic thermal overload relays have the advantage of electronics which allow a more complex thermal image of the motor to be created.
They can be combined with products having complementary functions, such as:
- temperature sensing via PTC probes,
- protection against jamming and overtorque,
- protection against phase reversal,
- earth fault protection,
- protection against no-load running,
- alarm function.

Protection components
Motor and machine protection

Overload relays

DF526185-16-M.tif



LT3 S relays for use with thermistor probes

DF526186-22-M.tif



LR97 D07 instantaneous electronic overcurrent relays

PF526187.tif



TeSys U LUB 32 starter with multifunction control unit LUC M

PF526188.tif



TeSys U controller LUTM 20BL

DF526189-30-M.tif

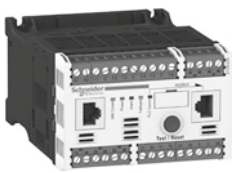

TeSys T controller LTM R08MBD

Protection functions *(continued)*

Overload protection (continued)

Relays for use with PTC thermistor probes

With direct sensing of the stator windings, these relays can be used to protect motors against:
- overload,
- a rise in ambient temperature,
- a ventilation circuit fault,
- a high starting frequency,
- mechanical shocks, etc.

Overload (or overtorque) relays

These relays protect the drive line in the event of a locked rotor, seizure or mechanical shocks. This is an additional protection.
Unlike thermal overload relays, these relays do not have a thermal memory. They have definite time characteristics (adjustable current threshold and time delay).
The overtorque relay can be used as overload protection for motors with long starting times or very frequent starting (for example, lifting hoists).

Multifunction relays

- Overcurrent relays are limited when it is necessary to take into account problems associated with voltage, temperature or special applications. New production or maintenance management needs have prompted manufacturers to offer products which provide not only adaptable protection, but also complete management of the motor and its load.

They incorporate:
- current and voltage sensors (TeSys T controllers),
- hybrid analog and digital electronic technology,
- the use of communication buses for data exchange and control,
- powerful motor modelling algorithms,
- integrated application programs whose parameters can be set.

These products make it possible to reduce installation and operating costs by reducing maintenance and downtime.

TeSys U starters:
The multifunction relay is incorporated in the motor starter.
This solution is very compact with reduced wiring. It is limited to 32 A.

TeSys U controllers:
The multifunction relay is separate from the power line and reuses the function blocks from the TeSys U solution. It can be used in conjunction with a contactor up to 810 A.

TeSys T controllers:
The multifunction relay is separate from the power line and incorporates inputs and outputs. It can be used in conjunction with a contactor up to 810 A.

Protection components
Motor and machine protection

Overload relays

Protection relay selection table

	Motor protection		Machine protection	Motor and machine protection	
Relay type	**Thermal overload relay** **LR2 K, LRD, LRD 3, LR9 F, LR9 D** (1)	**Relays for use with PTC probes** **LT3 S**	**Overtorque relays** **LR97 D, LT47**	**TeSys U controller** **LUT M**	**TeSys T controller** **LTM R**
Causes of overheating	(2)		(2)	(2)	(3)
Slight overload	■	■	□	■	■
Locked rotor	■	□	■	■	■
No-load running				■	■
Supply phase failure	■	□	LR9 7D	■	
Ventilation fault		■			With probes
Abnormal temperature rise	□	■			With probes
Shaft bearing seizure	□	■	□	□	With probes
Insulation fault	□			■	■
Protracted starting time	■	□	■	■	■
Severe duty	□	■	■	□	With probes
Voltage variation	□	□	□	□	■
Frequency fluctuations	□				■
Loss of machine excitation					■

■ Ideally suited
□ Possible solution
Not suitable (no protection)

(1) For motor circuit breaker type GV2ME.
(2) Protection based on current.
(3) Protection based on current and voltage.

Protection components

TeSys LRK thermal overload relays, adjustable from 0.11 to 16 A

Overload relays

Environment

Conforming to standards			IEC 60947, NF C 63-650, VDE 0660, BS 4941
Product certifications			UL, CSA
Protective treatment	Conforming to IEC 60068 (DIN 50016)		"TC" (Klimafest, Climateproof)
Degree of protection	Conforming to VDE 0106		Protection against direct finger contact
Ambient air temperature around the device	Storage	**°C**	-40...+70
	For normal operation (IEC 60947)	**°C**	-20...+55 (without derating)
	Operating limit	**°C**	-30...+60 (with derating) (1)
Maximum operating altitude	Without derating	**m**	2000
Operating positions			**Vertical axis** 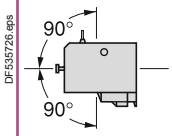 Without derating **Horizontal axis** 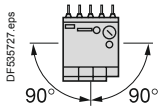 With derating (1)
Flame resistance	Conforming to UL 94		Self-extinguishing material V1
	Conforming to NF F 16-101 and 16-102		Conforming to requirement 2
Shock resistance, hot state (1/2 sine wave, 11 ms)	Conforming to IEC 60068, N/C contact		10 gn
	Conforming to IEC 60068, N/O contact		10 gn
Vibration resistance, hot state 5 to 300 Hz	Conforming to IEC 60068, N/C contact		2 gn
	Conforming to IEC 60068, N/O contact		2 gn
Safe separation of circuits	Conforming to VDE 0106 and IEC 60536		VLSV *(2)*, up to 400 V

Cabling Screw clamp terminals			Minimum	Maximum	Maximum to IEC 60947
	Solid cable	**mm²**	1 x 1.5	2 x 4	1 x 4 + 1 x 2.5
	Flexible cable without cable end	**mm²**	1 x 0.75	2 x 4	2 x 2.5
	Flexible cable with cable end	**mm²**	1 x 0.34	1 x 1.5 + 1 x 2.5	1 x 1.5 + 1 x 2.5

Tightening torque	Philips head n° 2 - Ø6	**N.m**	0.8
Mounting			Directly under the contactor or reversing contactor
Connections			Made automatically when mounted under the contactor, as follows: ■ contactor terminal A2 connected to overload relay terminal 96 on all products, ■ contactor terminal 14 connected to overload relay terminal 95 on products with 3 P + N/O. When using 3 P + N/C, or 4 P contactors, or the N/O auxiliary contact marked 13-14, at a voltage other than the coil voltage, break off the link marked 14.

Auxiliary contact characteristics

Number of contacts			1 N/C + 1 N/O						
Conventional thermal current		**A**	6						
Short-circuit protection	Conforming to IEC 60947, VDE 0660. gG fuse or circuit breaker GB2 CB●●	**A**	6 max.						
Maximum power of the controlled contactor coils (sealed) (Occasional operating cycles of contact 95-96)	a.c.	**V**	24	48	110	220/230	400	415/440	600/690
		VA	100	200	400	600	600	600	600
	d.c.	**V**	24	48	110	220	250	–	–
		W	100	100	50	45	35	–	–
Maximum operational voltage	a.c., category AC-15	**V**	690						
	d.c., category DC-13	**V**	250						

(1) Please consult your Regional Sales Office.
(2) Very low safety voltage.

References: pages B11/2 and B11/3
Dimensions: page B11/30
Schemes: page B11/30

Protection components

TeSys LRK thermal overload relays, adjustable from 0.11 to 16 A

Overload relays

Electrical characteristics of the power circuit			
Rated operational voltage (Ue)	Up to	**V**	690
Rated insulation voltage (Ui)	Conforming to BS 4941	**V**	690
	Conforming to IEC 60947	**V**	690
	Conforming to VDE 0110 group C	**V**	750
	Conforming to CSA C 22-2 n° 14	**V**	600
Rated impulse withstand voltage (Uimp)		**kV**	6
Frequency limits of the operational current		**Hz**	Up to 400
Power dissipated per pole		**W**	2

Operating characteristics			
Sensitivity to phase failure	Conforming to IEC 60947		Yes
Reset	Manual or automatic		Selected by means of a lockable and sealable switch on the front of the relay
Signalling	On front of relay		Trip indicator
Reset-Stop function			Pressing the Reset-Stop button: - actuates the N/C contact - has no effect on the N/O contact
Test function	By pushbutton		Pressing the Test button enables: - checking of the control circuit wiring - simulation of overload tripping (actuation of both N/C and N/O contacts, and of the trip indicator)
Short-circuit protection and coordination			See pages A6/11 and A6/20

Tripping curves

Average operating time related to multiples of the current setting (Class 10 A)

Balanced 3-phase operation, from cold state

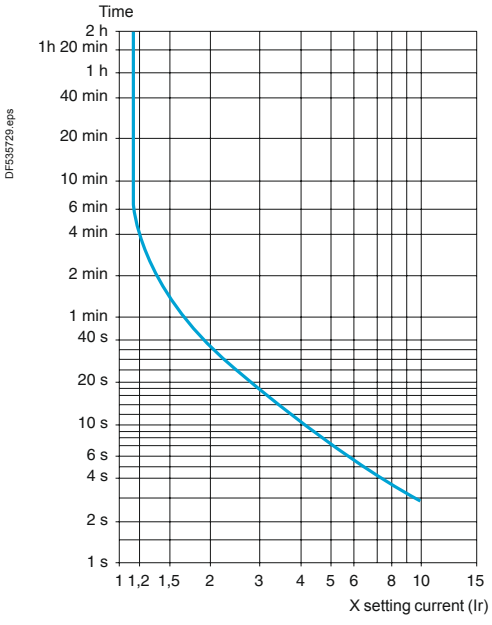

Balanced operation with 2 phases only, from cold state

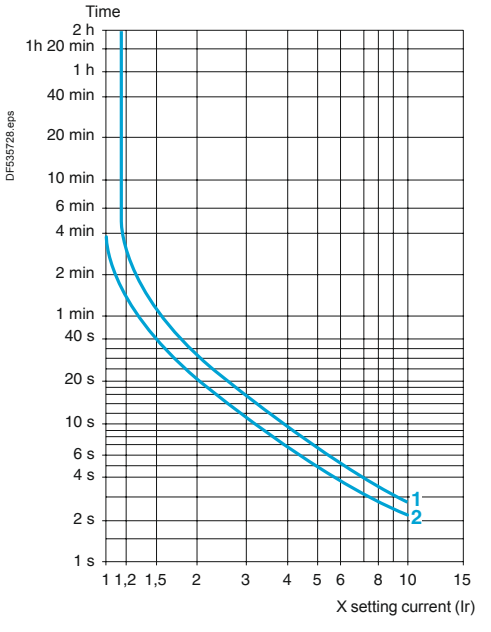

Setting: at lower end of scale

Setting: at upper end of scale

Overload relays

Protection components

TeSys LRK thermal overload relays, adjustable from 0.11 to 16 A

Dimensions, mounting

LR2 K

Direct mounting beneath the contactor

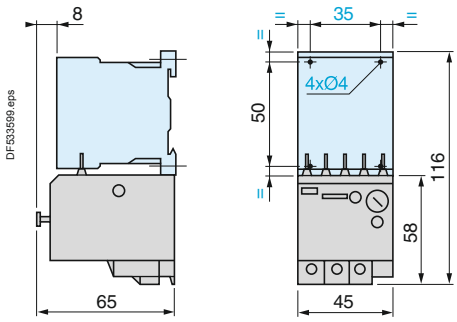

Separate mounting with terminal block LA7 K0064 on 35 mm ⊐ rail
(AM1 DP200 or AM1 DE200)

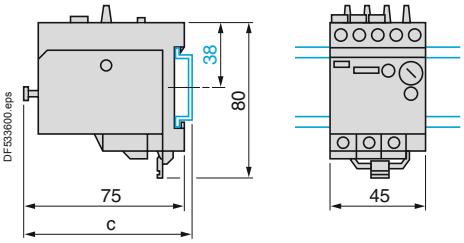

AM1	c
DP200	78.5
DE200	86

Schemes

LR2 K

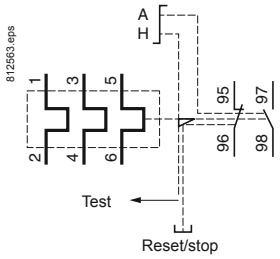

LR2 K + LC● K

Pre-wiring scheme

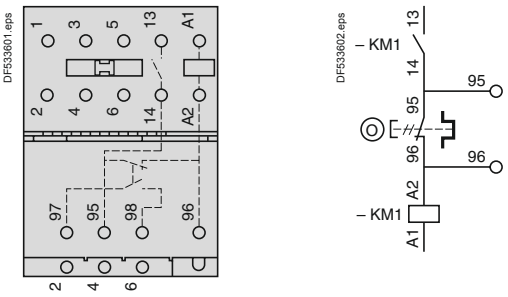

LR7 K

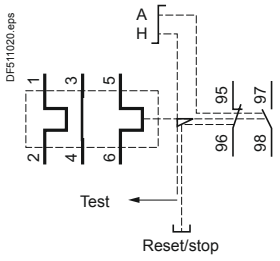

Note: *If pre-wiring is not required, break off the 2 links located on the thermal overload relay.*

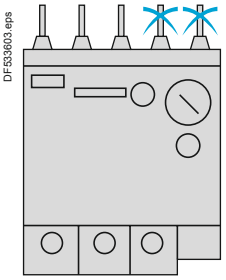

Characteristics:
pages B11/28 and B11/29

References:
pages B11/2 and B11/3

TeSys protection components
TeSys LRD, 3-pole thermal overload relays



LRD 08



LRD 04L...32L



LRD 365

EverLink®

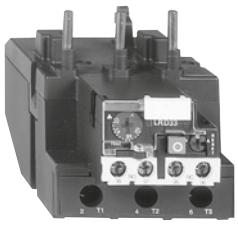

LRD 33●●

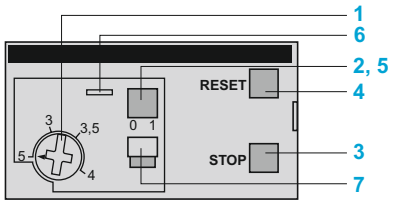

LRD 01…35, LRD 04L...32L
LRD 313…LRD 365

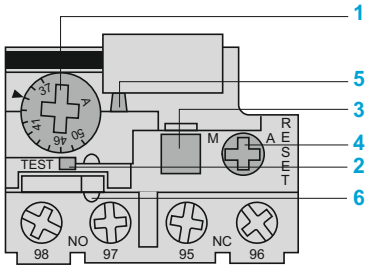

LRD 3361…4369, LR2 D3561…3563

Presentation

TeSys D thermal overload relays are designed to protect a.c. circuits and motors against:
- overloads
- phase failure
- excessively long starting times
- prolonged stalled rotor condition.

Power connection

LRD 01 à LRD 35
LRD 01 to 35 relays are designed for connection by screw clamp terminals.
They can be supplied for connection by spring terminals or by lugs (1).

LRD04 to LRD32L
These relays are designed for connection by screw clamp terminals. They can be supplied for connection by lugs (1).

LRD 313 to LRD 365
These relays are for connection by BTR screw connectors (hexagon socket head).
The screws are tightened by means of a size 4, insulated Allen key.
This type of connection uses the **Ever**Link® system with creep compensation (2) (Schneider Electric patent).
This technique makes it possible to achieve accurate and durable tightening torque.

These relays are also available for connection by lugs (1).

LRD 3361 to 4369, LR2 D3561 to D3563
LRD 3361 to 4369 and LR2 D3561 to D3563 relays are designed for connection by screw clamp terminals. They can be supplied for connection by lugs (1).

Description

TeSys D 3-pole thermal overload relays are designed to protect a.c. circuits and motors against overloads, phase failure, long starting times and prolonged stalling of the motor.

1	Adjustment dial Ir.
2	Test button. Operation of the Test button allows: - checking of control circuit wiring, - simulation of relay tripping (actuates both the N/O and N/C contacts).
3	Stop button. Actuates the N/C contact; does not affect the N/O contact.
4	Reset button.
5	Trip indicator.
6	Setting locked by sealing the cover.
7	Selector for manual or automatic reset.

LRD 01 to 35, LRD 04L to 32L and LRD 313 to LRD 365 relays are supplied with the selector in the manual position, protected by a cover. Deliberate action is required to move it to the automatic position.

(1) Connection by lugs meets the requirements of certain Asian markets and is suitable for applications subject to strong vibration, such as railway transport.
(2) Creep: normal crushing phenomenon of copper conductors, that is accentuated over time.

References:
pages B11/4 to B11/7

Dimensions, mounting:
pages B11/35 to B11/37

Schemes:
page B11/37

TeSys protection components
TeSys LRD, 3-pole thermal overload relays

Overload relays

Environment

Conforming to standards			IEC/EN 60947-4-1, IEC/EN 60947-5-1, UL 508, CSA C22.2 n° 14. ATEX directive 94/9/EC (1)
Product certifications			UL (4), CSA (4) CCC, GOST ATEX INERIS (1) GL, DNV, RINA, BV, LROS
Degree of protection (front face)	Conforming to IEC 60529		Protection against direct finger contact IP20
Protective treatment	Conforming to IEC 60068		"TH"
Ambient air temperature around the device	Storage	°C	-60…+70
	Normal operation, without derating (IEC 60947-4-1)	°C	-20…+60
	Minimum /maximum operating temperatures (with derating)	°C	-40…+70
Operating positions without derating	In relation to normal vertical mounting plane		Any position. When mounting on a vertical rail, use a stop.
Flame resistance	Conforming to UL94		V1
	Conforming to IEC 60695-2-1	°C	850
Shock resistance	Permissible acceleration conforming to IEC 60068-2-7		15 gn - 11 ms
Vibration resistance (2)	Permissible acceleration conforming to IEC 60068-2-6		6 gn except LRD04L...LRD32L: 3 gn
Dielectric strength at 50 Hz	Conforming to IEC 60255-5	kV	6
Surge withstand	Conforming to IEC 60801-5	kV	6

Electrical characteristics of power circuit

Relay type			LRD 01 …16, LR3 D01 …16	LRD 04L ...32L	LRD 21 …35, LR3 D21 …35	LRD 313 …365 LR3 D313 …365	LRD 313L …365L	LRD 3322 …33696 LR3 D3322 … 33696	LR2 D3522 … 3563	LRD 4365 …4369
Tripping class	Conforming to UL508, IEC 60947-4-1		10 A	20	10 A	10 A	20	10 A	20	10 A
Rated insulation voltage (Ui)	Conforming to IEC 60947-4-1	V	690					1000 (3)		
	Conforming to UL, CSA	V	600							600 except LRD 4369
Rated impulse withstand voltage (Uimp)		kV	6							
Rated operational voltage (Ue)		V	690							
Frequency limits	Of the operating current	Hz	0…400							
Setting range	Depending on model	A	0.1…13	0.63…32	12…38	9…65	9…65	17…140	17…80	80…140

Auxiliary contact characteristics

Conventional thermal current		A	5					
Max. sealed consumption of the operating coils of controlled contactors (Occasional operating cycles of contact 95-96)	a.c. supply, AC-15	V	120	240	380	480	500	600
		A	3	1.5	0.95	0.75	0.72	0.12
	d.c. supply, DC-13	V	125	250	440			
		A	0.22	0.1	0.06			
Protection against short-circuits	By gG, BS fuses. Maximum rating or by GB2	A	5					

(1) For relays LRD 01 to LRD 365, LRD 3322 to LRD 3365, LRD 04L to LRD 32L, LRD 4365 to LRD 4369, LRD 33656 to LRD 33696.
(2) For relays LRD 313 to LRD 365: 6 gn only with independent plate mounting and 4 gn when mounted beneath the contactor.
(3) 750 V for LRD 33656, LRD 33676, LRD 33696.
(4) Except for relays LRD 4369.

References: pages B11/4 to B11/7
Dimensions, mounting: pages B11/35 to B11/37
Schemes: page B11/37

TeSys protection components
TeSys LRD, 3-pole thermal overload relays

Overload relays

Power circuit connection characteristics

Relay type			LRD 01 …16, LR3 D01 …16	LRD 04L …21L	LRD 22L …32L	LRD 21 …35, LR3 D21 …35	LRD 313 …365 LR3 D313 …365	LRD 313L …365L	LRD 3322 …33696 LR3 D3322 … 33696	LR2 D3522 …3563	LRD 4365 …4369
Connection to screw clamp terminals											
Flexible cable without cable end	1 conductor	mm²	1.5…10			1.5…10	1…35	1…35	4…35		4…50
Flexible cable with cable end	1 conductor	mm²	1…4		1…6	1…6 except **LRD 21:** 1…4	1…35	1…35	4…35		4…35
Solid cable without cable end	1 conductor	mm²	1…6		1.5…10	1.5/10 except **LRD 21:** 1/6	1…35	1…35	4…35		4…50
Tightening torque		N.m	1.7		2.5	2.5	1…25: 5 35: 8	1…25: 5 35: 8	9	9	9
Connection to spring terminals (Min/max c.s.a.) (except LRD 04L...LRD 32L)											
Flexible cable without cable end	1 conductor	mm²	1.5…4	–	–	1.5…4	–	–	–	–	–
Flexible cable with cable end	1 conductor	mm²	1.5…4	–	–	1.5…4	–	–	–	–	–
Connection by bars or lugs			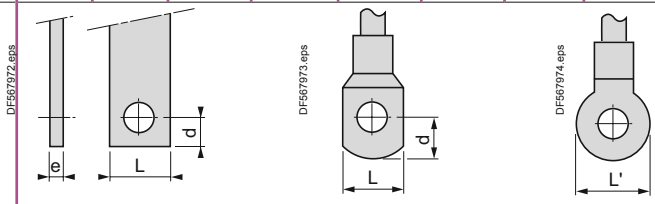								

Relay type			LRD 016…166 LRD 04L6 … 16L6	LRD 216…356 LRD 21L6 … 32L6	LRD 3136 … 3656	LRD 313L6 … 365L6	LRD 3322A66 … 3365A66
Pitch	Without spreaders	mm	14.5	17.5	17.5	17.5	21.5
Bars or cables with lugs	e	N.m	≤ 6	≤ 6	≤ 6	≤ 6	≤ 6
	L	mm	≤ 8	≤ 8	≤ 13.5	≤ 13.5	≤ 16
	L'	mm	≤ 9.5	≤ 10	≤ 16.5	≤ 16.5	≤ 16
	d		≤ 7	≤ 7	≤ 10	≤ 10	≤ 12
Screws			M4	M4	M6	M6	M10
	Tightening torque	N.m	2.3	2.3	6	6	11.3

Control circuit connection characteristics

Connection to screw clamp terminals or spring terminals

Bare cables

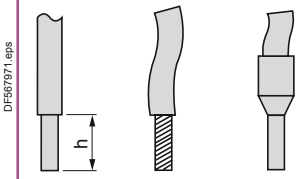

Relay type			LRD 01 …16, LR3 D01 …16	LRD 04L …21L	LRD 22L …32L	LRD 21 …35, LR3 D21 …35	LRD 313 …365 LR3 D313 …365	LRD 313L …365L	LRD 3322 …33696 LR3 D3322 … 33696	LR2 D3522 … 3563	LRD 4365 …4369
Connection to screw clamp terminals (1)	Solid cable without cable end	mm²	2 x 1…2.5								
	Flexible cable without cable end	mm²	2 x 1…2.5								
	Flexible cable with cable end	mm²	2 x 1…2.5								
Tightening torque		N.m	1.7								
Connection to spring terminals (Min/max c.s.a.) (except LRD 04L...LRD 32L)	Solid cable	mm²	1…2.5	–		1…2.5			–		
	Flexible cable without cable end	mm²	1…2.5	–		1…2.5			–		

*(1) For relays LRD 313 to 365: BTR hexagon socket head screws, **Ever**Link® system. In accordance with local electrical wiring regulations, a size 4 insulated Allen key must be used (reference **LAD ALLEN4**, see page B8/21).*

References: pages B11/4 to B11/7
Dimensions, mounting: pages B11/35 to B11/37
Schemes: page B11/37

TeSys protection components
TeSys LRD, 3-pole thermal overload relays

Overload relays

Operating characteristics

Relay type			LRD 01 …16, LR3 D01 …16	LRD 04L... LRD 32L	LRD 21 …35, LR3 D21 …35	LRD 313 …365 LR3 D313 …365	LRD 313L …365L	LRD 3322 …33696 LR3 D3322 … 33696	LR2 D3522 … 3563	LRD 4365 …4369
Temperature compensation		°C	-20…+60							
Tripping threshold	Conforming to IEC 60947-4-1	A	1.14 ±0.06 Ir							
Sensitivity to phase failure			Tripping current 130 % of Ir on two phases, the third phase at 0.							

Tripping curves
Average operating time related to multiples of the setting current

LRD 01 to LRD 35, LR2 D and LRD 3322 to LRD 4369

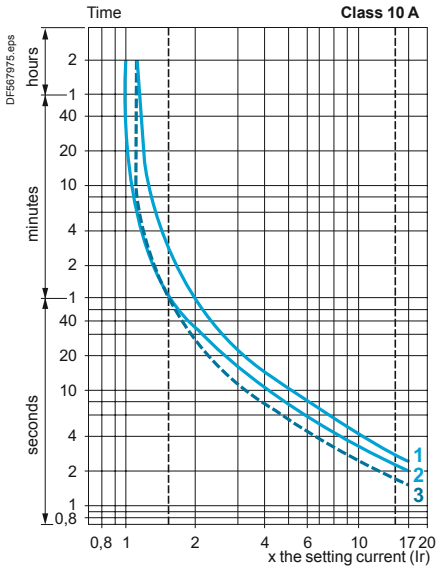

LRD 04L to LRD 32L and LR2 D3522 to LR2 D3563

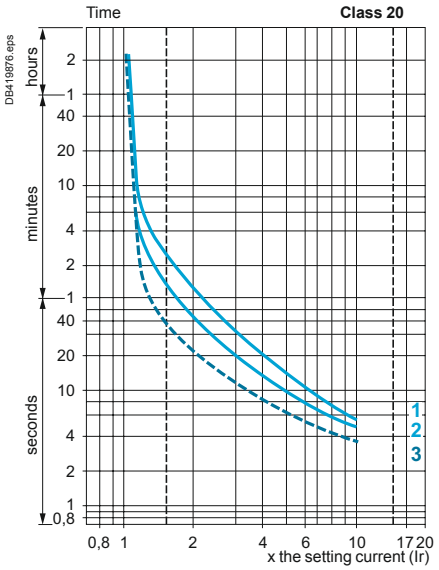

LRD 313 to LRD 365

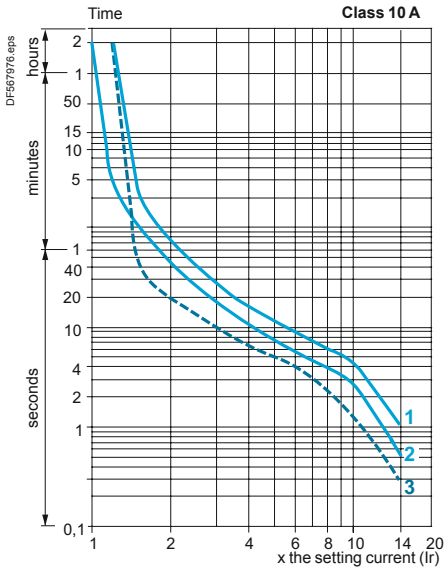

LRD 313L to LRD 365L

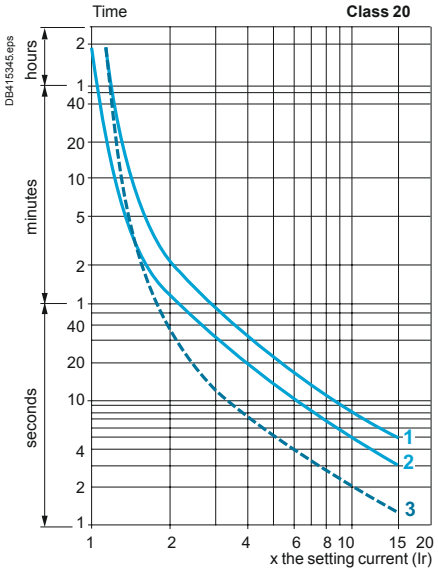

1 Balanced operation, 3-phase, without prior current flow (cold state).
2 2-phase operation, without prior current flow (cold state).
3 Balanced operation, 3-phase, after a long period at the set current (hot state).

References:
pages B11/4 to B11/7

Dimensions, mounting:
pages B11/35 to B11/37

Schemes:
page B11/37

Overload relays

LRD 01…35

Direct mounting beneath contactors with screw clamp connections

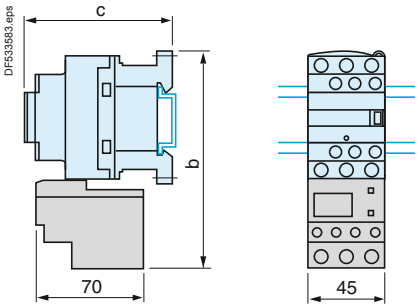

LC1	D09…D18	D25…D38
b	123	137
c	See pages B8/67 and B8/68	

LRD 04...32L

Direct mounting beneath contactors with screw clamp connections

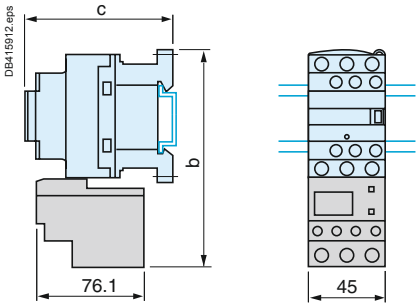

LC1	D09…D18	D25…D38
b	123	137
c	See pages B8/67 and B8/68	

LRD 013…223

Direct mounting beneath contactors with spring terminal connections

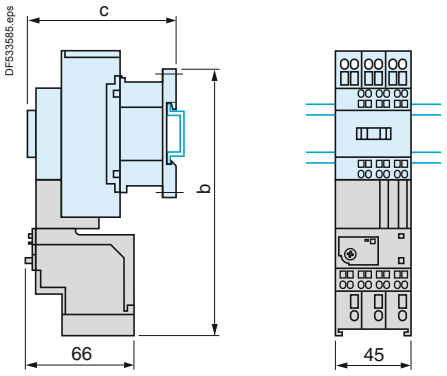

LC1	D093…D253
b	168
c	See pages B8/67 and B8/68

LRD 313 …365

Direct mounting beneath contactors LC1 D40A…D65A with screw clamp connections or EverLink® connectors

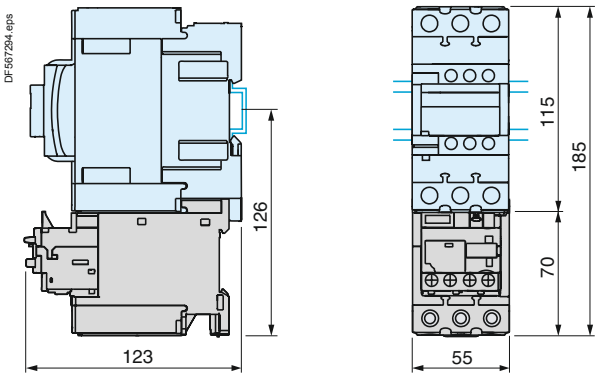

LRD 3136 …3656

Direct mounting beneath contactors LC1 D40A6…D65A6 with lugs

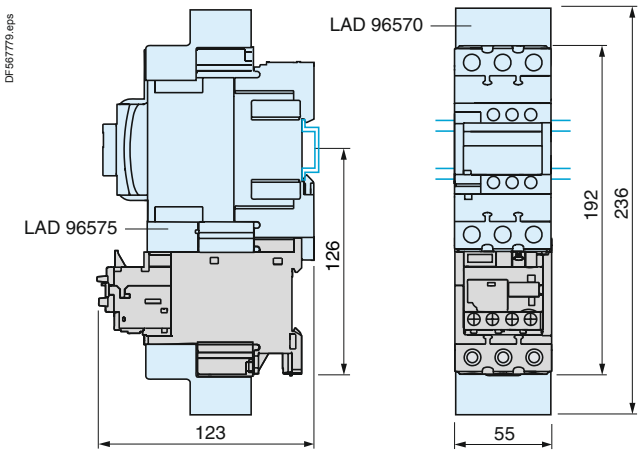

LRD 33●●●

Direct mounting beneath contactors LC1 D80…D95

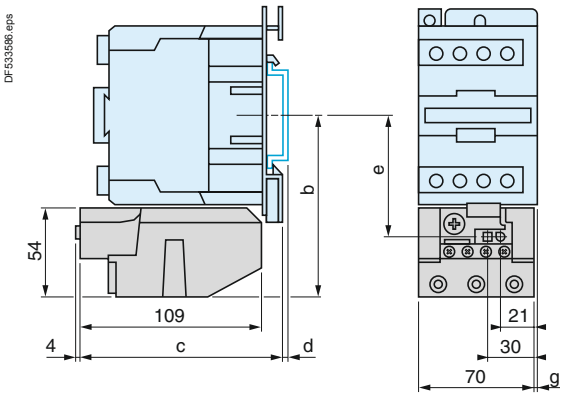

AM1	DL201	DL200
d	7	17

Control circuit AC	b	c	e	g (tri)	g (tetra)
LC1 D80	115.5	124	76.9	9.5	22
LC1 D95	115.5	124	76.9	9.5	-
Control circuit DC					
LC1 D80, D95	115.5	179.4	76.9	9.5	22

Characteristics: pages B11/31 to B11/34
References: pages B11/4 to B11/7
Schemes: page B11/37

Overload relays

LRD 4●●●

Direct mounting beneath contactors LC1 D115 and D150

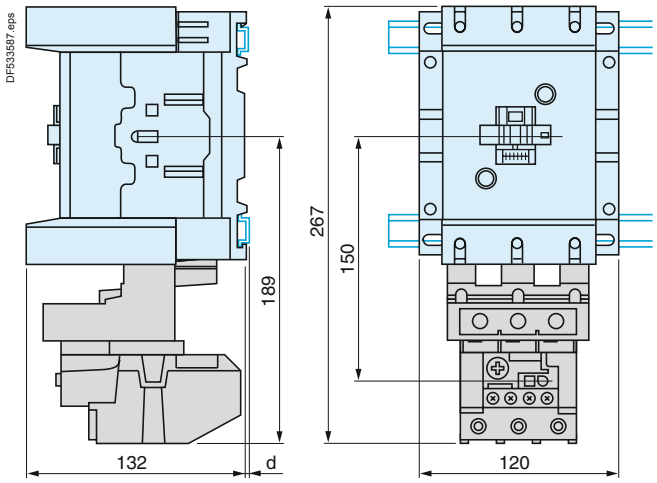

AM1	DL200 and DR200	DE200 and ED●●●
d	2.5	10.5

LRD 01…35

Independent mounting on 50 mm centres or on rail AM1 DP200 or DE200

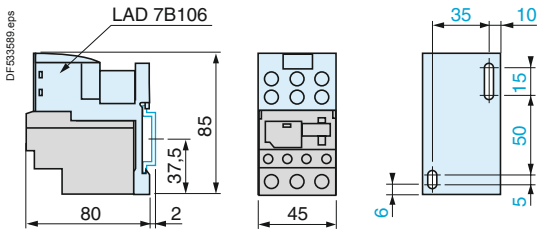

Independent mounting on 110 mm centres

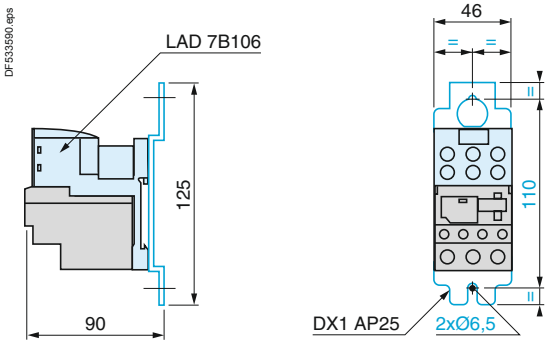

LRD 313 …365

Mounting on rail AM1 D●200 or ED200

With terminal block LAD 96560

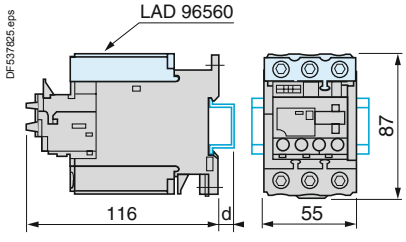

AM1	DP200	DE200	ED200
d	2	9.5	9.5

Panel mounting

Outgoing terminal block not shown

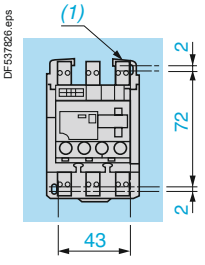

(1) 2 elongated holes Ø 4.2 x 6.

Mounted on plate AM1 P

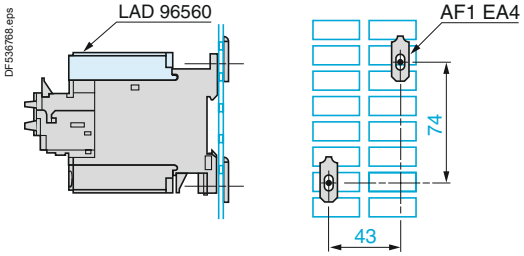

LRD 01…35 and LRD 313…365

Remote tripping or electrical reset

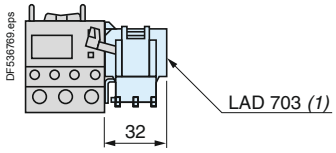

(1) Can only be mounted on RH side of relay LRD 01…35 and LRD 313…365 .

Characteristics: pages B11/31 to B11/34
References: pages B11/4 to B11/7
Schemes: page B11/37

Overload relays

LRD 04L...32L

Independent mounting on 50 mm centres or on rail AM1 DP200 or DE200

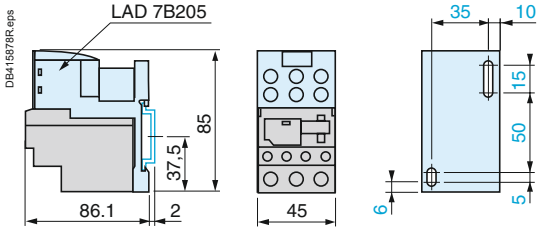

AM1	DP200	DE200
d	2	9.5

Independent mounting on 110 mm centres

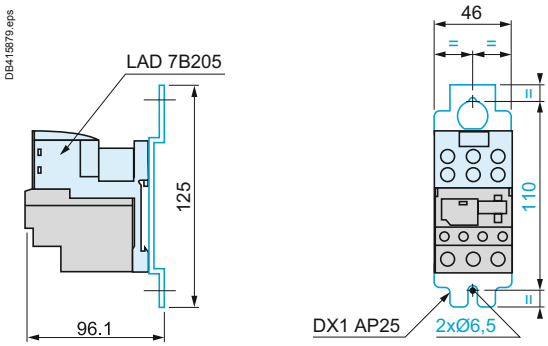

Remote tripping or electrical reset

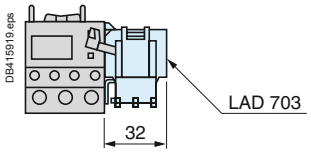

(1) Can be mounted on RH or LH side of relay LR2 D15.

LRD 3●●● and LR2 D35●●

Independent mounting on 50 mm centres or on rail AM1 DP200 or DE200

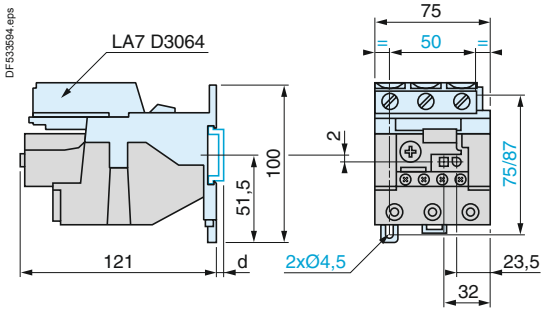

AM1	DP200	DE200
d	2	9.5

LRD 3●●●, LR2 D35●● and LR9 D

Remote tripping or electrical reset

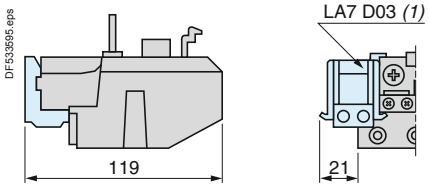

(1) Can be mounted on RH or LH side of relay LRD 3●●●, LR2 D35●● or LR9 D.

LRD 3●●●

Adapter for door mounted operator

LA7 D1020

Stop

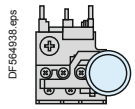

Reset

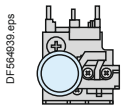

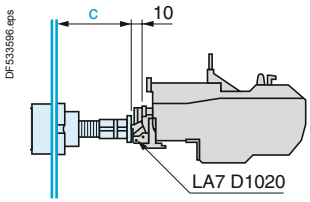

c: adjustable from 17 to 120 mm

LRD, LRD 313…365, LRD04...32L

"Reset" by flexible cable

LA7 D305 and LAD 7305

Mounting with cable straight

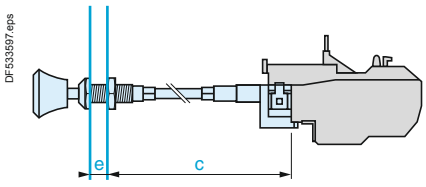

e: up to 20 mm / c: up to 550 mm

Mounting with cable bent

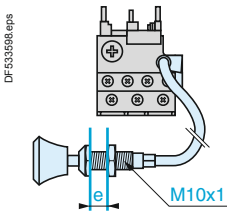

LRD ●●, LRD 3●● and LR2 D●●

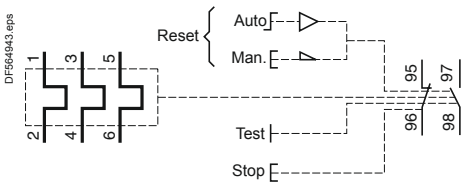

Pre-wiring kit LAD 7C1, LAD 7C2

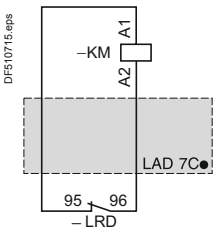

Characteristics:
pages B11/31 to B11/34

References:
pages B11/4 to B11/7

TeSys protection components
TeSys LR9D electronic thermal overload relays

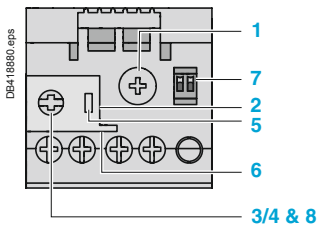

LR9 D01...110S

Description: LR9D01, 02, 08 and 32

These self-powered electronic thermal overload relays are designed for direct mounting to contactors LC1D09 through LC1D38.
LR9D110S self-powered electronic thermal overload relay is designed for separate mounting only.

In addition to the protection provided by the TeSys D thermal overload relays (see page B11/31), they offer the following additional features:
- protection against phase imbalance
- choice of starting class
- protection of unbalanced circuits
- protection of single-phase circuits

1 Adjustment dial Ir.
2 Test button.
3 Stop button.
4 Reset button.
5 Trip indicator.
6 Setting locked by sealing the cover.
7 Class 5/10/20/30 dipswitches.
8 Reset mode selector.

Relay type			LR9D01, 02, 08, 32 and LR9D110S					
Environment								
Conforming to standards			IEC 60947-4-1, CSA C22.2, GB 14048.4 and UL 60947-4-1					
Product certifications			CCC, CSA, UL, TUV					
Degree of protection	Conforming to IEC 60529 and VDE 0106		IP 20 on front panel					
Ambient air temperature around the device (Conforming to IEC 60255-8)	Storage	**°C**	-55 to +80					
	Normal operation	**°C**	-25 to +70					
Maximum operating altitude	Without derating	**m**	2000					
Operating positions without derating	In relation to normal vertical mounting plane		Any position					
Shock resistance	Permissible acceleration conforming to IEC 60068-2-7		15 g (11ms)					
Vibration resistance	Permissible acceleration conforming to IEC 60068-2-6		6 g (10-150 Hz)					
Dielectric strength at 50 Hz	Conforming to IEC 60255-5	**kV**	6					
Surge withstand, common mode	Conforming to IEC 61000-4-5	**kV**	2					
Resistance to electrostatic discharge	Conforming to IEC 61000-4-2	**kV**	8					
Immunity to radiated radio-frequency disturbances	Conforming to IEC 61000-4-3 and NF C 46-022	**V/m**	10					
Immunity to fast transient currents	Conforming to IEC 61000-4-4	**kV**	2					
Electromagnetic compatibility	Draft EN 50081-1 and 2, EN 50082-2		Meets requirements					
Electrical characteristics of auxiliary contacts								
Conventional thermal current		**A**	5					
Max. sealed consumption of the operating coils of controlled contactors (Occasional operating cycles of contact 95-96)	a.c. supply	**V**	24	48	110	220	380	600
		VA	100	200	400	600	600	600
	d.c. supply	**V**	24	48	110	220	–	–
		W	100	100	50	45	–	–
Protection against short-circuits	By gG or BS fuses or by circuit breaker **GB2**	**A**	5					
Cabling Flexible cable without cable end	1 or 2 conductors	**mm² (AWG)**	1 to 2.5 (18 to 14)					
	Tightening torque	**Nm (lb-in)**	0.8 (7)					

References: page B11/10
Dimensions, mounting: page B11/42
Schemes: page B11/43

TeSys protection components
TeSys LR9D electronic thermal overload relays

Overload relays

Relay type			LR9D01	LR9D02	LR9D08	LR9D32	LR9D110S
Electrical characteristics of power circuit							
Tripping class	Conforming to IEC/EN 60947-4-1		5, 10, 20, 30				
	Conforming to UL 60947-4-1		10, 20, 30				
Rated insulation voltage (Ui)	Conforming to IEC 60947-4-1	**V AC**	1000				
Rated operational voltage (Ue)	Conforming to IEC 60947-4-1	**V AC**	690				
	Conforming to UL/CSA	**V AC**	600				
Rated impulse withstand voltage		**kV**	6				
Frequency limits	Of the operating current	**Hz**	50…60				
Setting range		**A**	0.1...0.5	0.4...2	1.6...8	6.4...32	22...110
Power circuit connections	Wire size	**mm² (AWG)**	1 to 16 (14 to 6)				4 to 50 (10 to 1/0)
	Tightening torque	**Nm (lb-in)**	3.1 (28)				9 (80)
Operating characteristics							
Consumption		**mW**	< 300				
Tripping thresholds	Conforming to IEC 60947-4-1	**A**	1.25 In				
Sensitivity to phase unbalance	Conforming to IEC 60947-4-1		Phase difference > 40%, tripping in 3 s				
Current setting ratio			5:1				

LR9 D01, 02, 08, 32, LR9110S tripping curves

Class 5 Trip curve

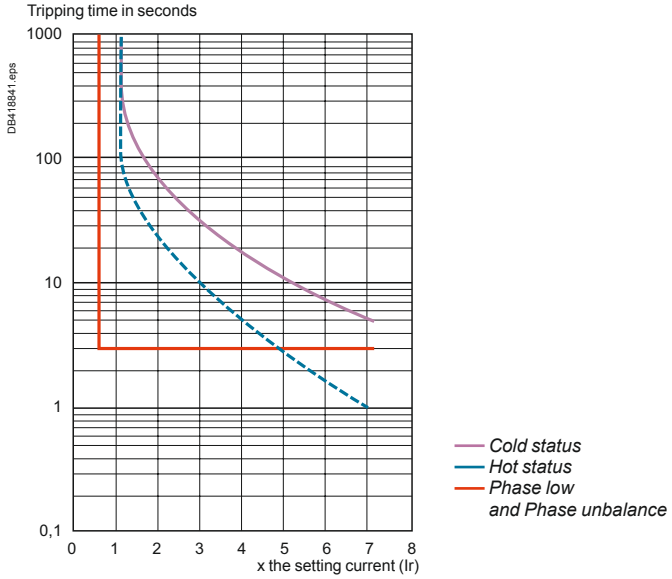

Class 10 Trip curve

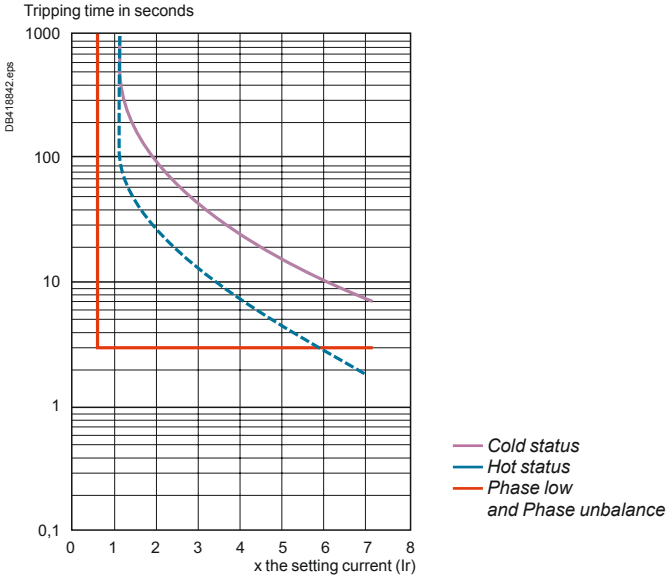

Class 20 Trip curve

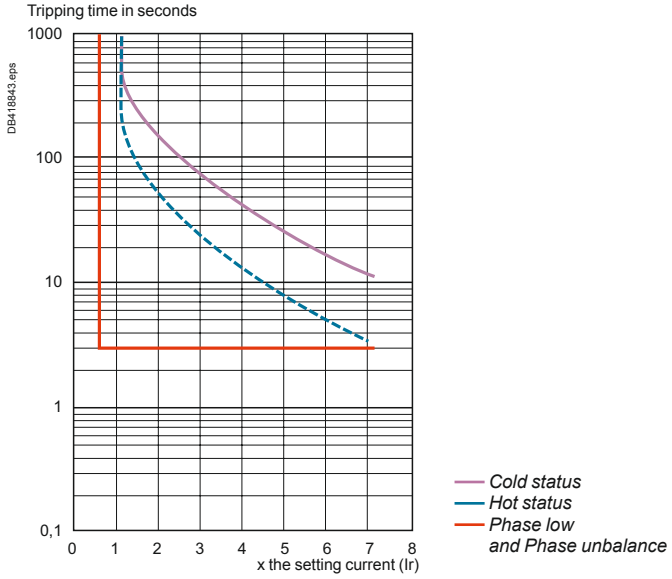

Class 30 Trip curve

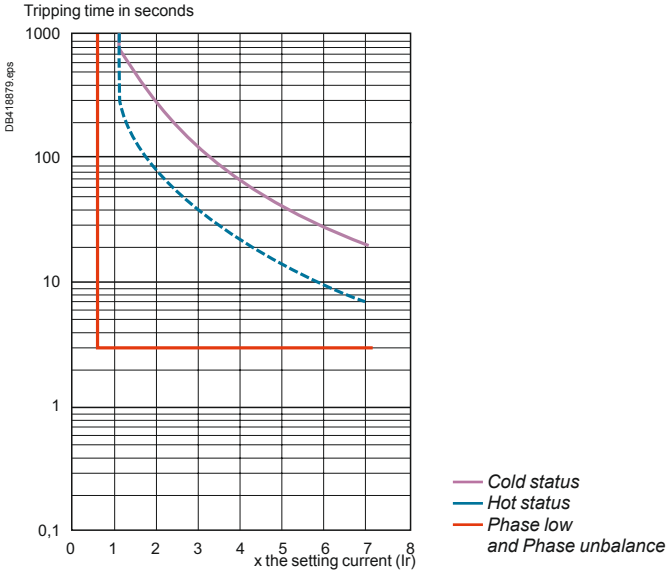

References: page B11/10
Dimensions, mounting: page B11/42
Schemes: page B11/43

TeSys protection components
TeSys LR9D electronic thermal overload relays

Overload relays

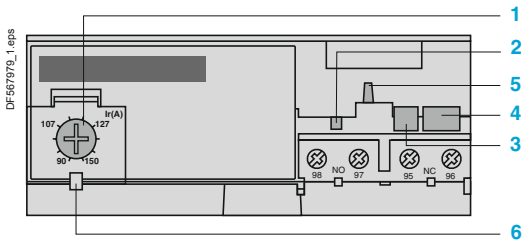

LR9 D5367…D5569

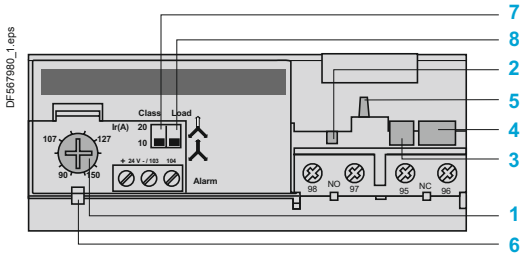

LR9 D67 and D69

Description: LR9D5367, LR9D5569, LR9D67, LR9D69

These electronic thermal overload relays are designed for use with contactors LC1 D115 and D150.

In addition to the protection provided by TeSys D thermal overload relays (see page B11/29), they offer the following special features:
- protection against phase imbalance
- choice of starting class
- protection of unbalanced circuits
- protection of single-phase circuits
- alarm function to avoid tripping by load shedding.

1 Adjustment dial Ir.
2 Test button.
3 Stop button.
4 Reset button.
5 Trip indicator.
6 Setting locked by sealing the cover.
7 Class 10/class 20 selector switch.
8 Selector for balanced load /unbalanced load

Relay type			LR9D5367, LR9D5569, LR9D67, LR9D69					
Environment								
Conforming to standards			IEC 60947-4-1, 255-8, 255-17, VDE 0660 and EN 60947-4-1					
Product certifications			UL 508 , CSA 22-2					
Degree of protection	Conforming to IEC 60529 and VDE 0106		IP 20 on front panel with protective covers **LA9 D11570●** or **D11560●**					
Protective treatment	Standard version		"TH"					
Ambient air temperature around the device (Conforming to IEC 60255-8)	Storage	**°C**	- 40…+ 85					
	Normal operation	**°C**	- 20…+ 55 (1)					
Maximum operating altitude	Without derating	**m**	2000					
Operating positions without derating	In relation to normal vertical mounting plane		Any position					
Shock resistance	Permissible acceleration conforming to IEC 60068-2-7		13 gn - 11 ms					
Vibration resistance	Permissible acceleration conforming to IEC 60068-2-6		2 gn - 5…300 Hz					
Dielectric strength at 50 Hz	Conforming to IEC 60255-5	**kV**	6					
Surge withstand	Conforming to IEC 61000-4-5	**kV**	6					
Resistance to electrostatic discharge	Conforming to IEC 61000-4-2	**kV**	8					
Immunity to radiated radio-frequency disturbances	Conforming to IEC 61000-4-3 and NF C 46-022	**V/m**	10					
Immunity to fast transient currents	Conforming to IEC 61000-4-4	**kV**	2					
Electromagnetic compatibility	Draft EN 50081-1 and 2, EN 50082-2		Meets requirements					
Electrical characteristics of auxiliary contacts								
Conventional thermal current		**A**	5					
Max. sealed consumption of the operating coils of controlled contactors (Occasional operating cycles of contact 95-96)	a.c. supply	**V**	24	48	110	220	380	600
		VA	100	200	400	600	600	600
	d.c. supply	**V**	24	48	110	220	440	–
		W	100	100	50	45	25	–
Protection against short-circuits	By gG or BS fuses or by circuit breaker **GB2**	**A**	5					
Cabling Flexible cable without cable end	1 or 2 conductors	**mm²**	Minimum c.s.a.: 1 Maximum c.s.a.: 2.5					
	Tightening torque	**Nm**	1.2					

(1) For operating temperatures up to 70 °C, please consult your Regional Sales Office.

References:
pages B11/4 to B11/7

Dimensions, mounting:
pages B11/35 to B11/38

Schemes:
page B11/39

TeSys protection components
TeSys LR9D electronic thermal overload relays

Overload relays

Relay type			LR9D5367, LR9D5569, LR9D67, LR9D69
Electrical characteristics of power circuit			
Tripping class	Conforming to UL 508, IEC 60947-4-1	**A**	10 or 20
Rated insulation voltage (Ui)	Conforming to IEC 60947-4-1	**V**	1000
	Conforming to UL, CSA	**V**	600
Rated impulse withstand voltage (Uimp)		**Hz**	8
Frequency limits	Of the operating current	**Hz**	50…60 (1)
Setting range	Depending on model	**A**	60…150
Power circuit connections	Width of terminal lug	**mm**	20
	Clamping screw		M8
	Tightening torque	**N.m**	18
Operating characteristics			
Temperature compensation		**°C**	- 20…+70
Tripping thresholds	Conforming to IEC 60947-4-1		
	Alarm	**A**	1.05 ±0.06 In
	Trip	**A**	1.12 ±0.06 In
Sensitivity to phase failure	Conforming to IEC 60947-4-1		Tripping in 4 s ±20 % in the event of phase failure
Alarm circuit characteristics			
Rated supply voltage	d.c. supply	**V**	24
Supply voltage limits		**V**	17…32
Current consumption	No-load	**mA**	≤ 5
Switching capacity		**mA**	0…150
Protection	Short-circuit and overload		Self protected
Voltage drop	Closed state	**V**	≤ 2.5
Cabling	Flexible cable without cable end	**mm²**	0.5…1.5
Tightening torque		**N.m**	0.45

(1) For other frequencies and for applications involving the use of these overload relays with soft starters or variable speed drives, please consult your Regional Sales Office.

LR9D5367, LR9D5569, LR9D67, LR9D69 tripping curves

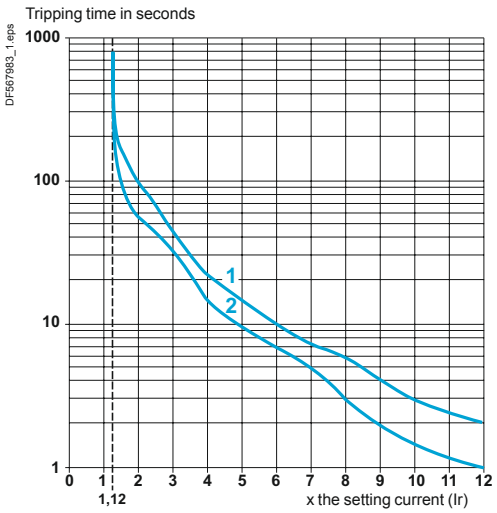

Average operating time related to multiples of the setting current

1 Cold state curve
2 Hot state curve

References: pages B11/4 to B11/7
Dimensions, mounting: pages B11/35 to B11/38
Schemes: page B11/39

TeSys protection components
TeSys LR9D electronic thermal overload relays

Overload relays

LR9D01, 02, 08, 32

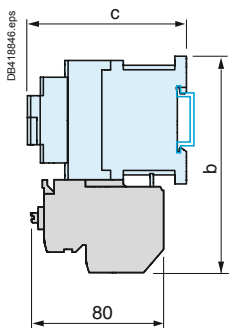

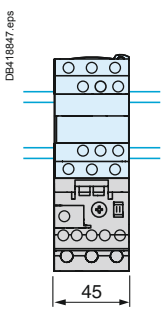

LC1	D09...D18	D25...D38
b	130	140
c	See pages B8/65 and B8/66	

LR9D110S

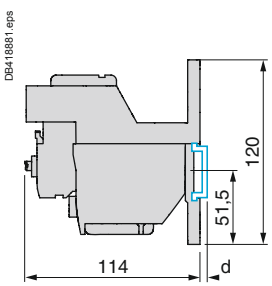

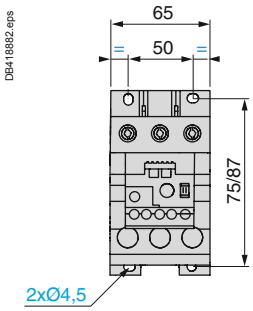

LR9D01...32

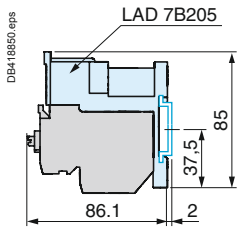

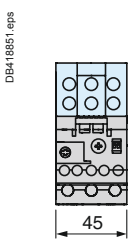

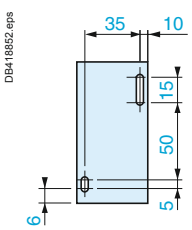

LR9D53●●, LR9D55●●, LR9D67, LR9D69

Direct mounting beneath contactors LC 1D115 and D150

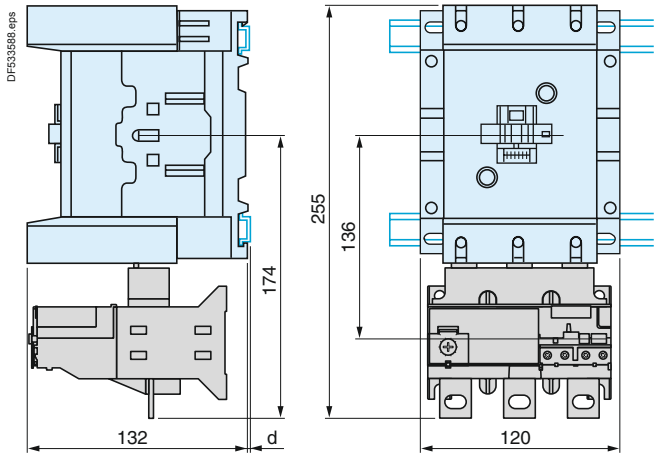

AM1	DP200 and DR200	DE200 and ED●●●
d	2.5	10.5

LR9D

"Reset" by flexible cable

LA7 D305 and LAD 7305

Mounting with cable straight

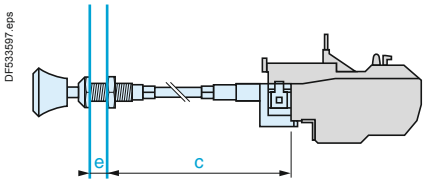

e: up to 20 mm / c: up to 550 mm

Mounting with cable bent

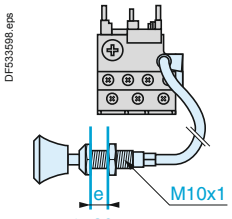

e: up to 20 mm

References: page B11/10
Characteristics: pages B11/38 to B11/39
Schemes: page B11/43

TeSys protection components
TeSys LR9D electronic thermal overload relays

Overload relays

LR9D01, 02, 08, 32, LR9 D110S

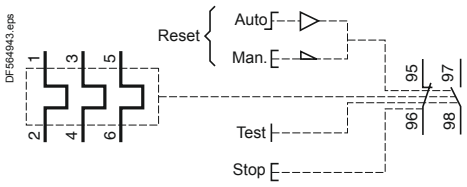

LR9D01, 02, 08, 32, LR9 D110S

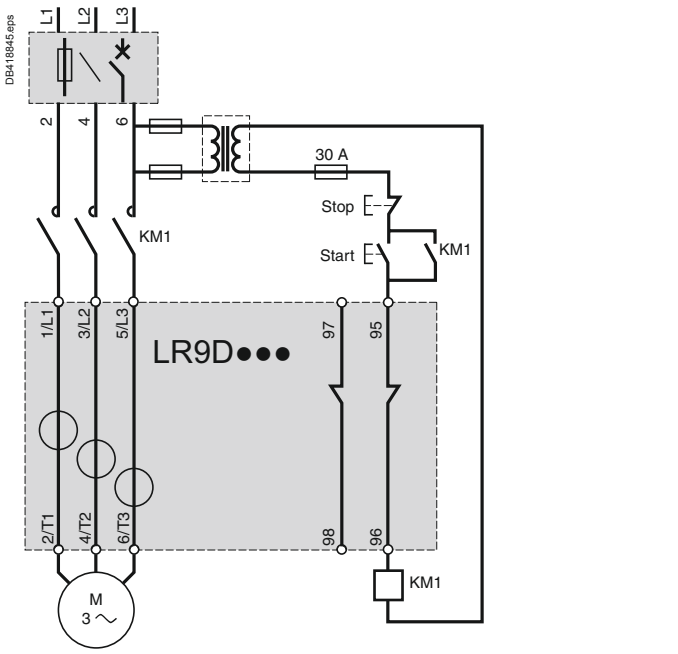

LR9D5●●●

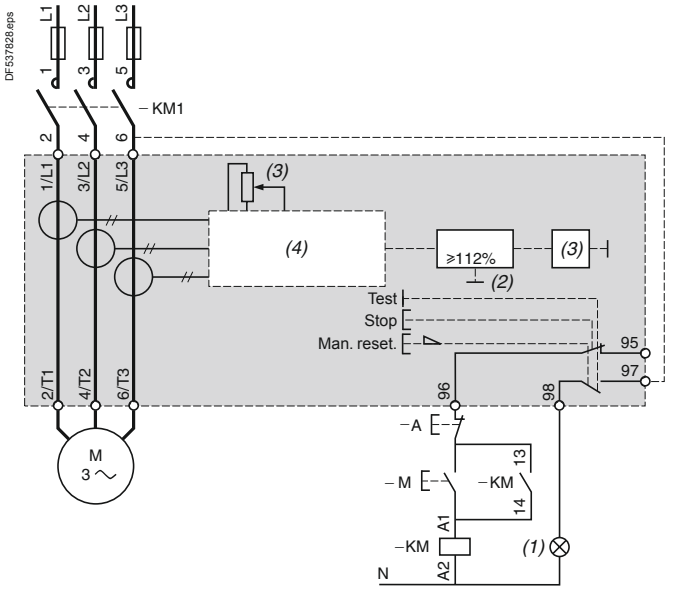

(1) Tripped.
(2) Overload.
(3) Setting current.
(4) Specialised circuit.

LR9 D67 and LR9 D69

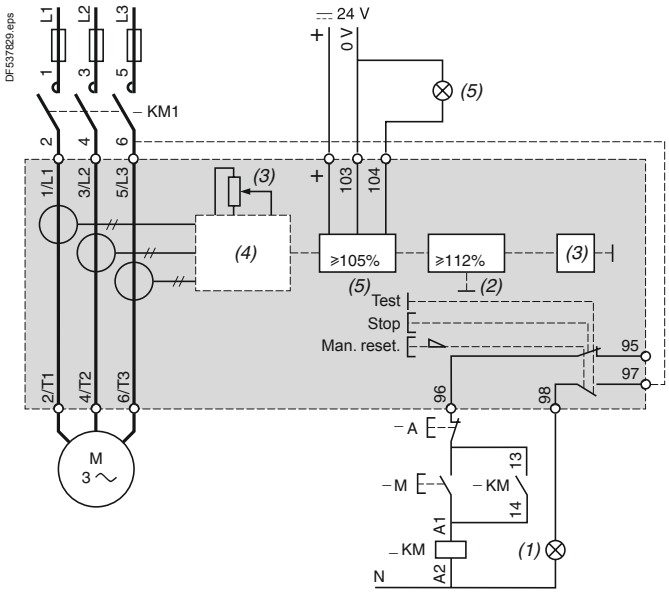

(1) Tripped.
(2) Overload.
(3) Setting current.
(4) Specialised circuit.
(5) Alarm.

References:
page B11/10
Characteristics:
pages B11/38 to B11/39
Dimensions:
page B11/42

Protection components
TeSys LR9 F electronic thermal overload relays

Presentation

TeSys LR9 F electronic protection relays are especially suited to the operating conditions of motors.
They provide protection against:
- thermal overload of 3-phase or single-phase balanced or unbalanced circuits;
- phase failure and large phase unbalance,
- protracted starting times,
- prolonged stalled rotor condition.

LR9 F electronic protection relays are mounted directly below an LC1 F type contactor. They cover a range from 30 to 630 A, in eight ratings.
The settings can be locked by sealing the transparent protective cover.
A reset button is mounted on the front of the relay.
Two versions are available:
- simplified version: class 10: LR9 F●3●●, class 20: LR9 F●5●●,
- complete version: class 10, 10 A or class 20, selectable, conforming to EN 60947-4-1: LR9 F●●.

This latter version includes an alarm function which makes it possible to forestall tripping by load shedding.

Simplified version: class 10 or 20

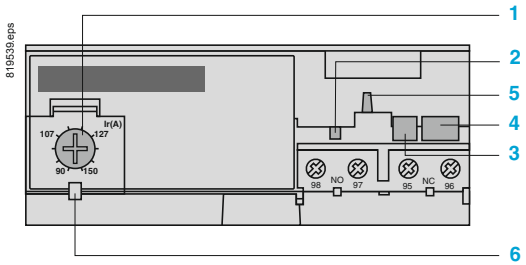

Complete version: class 10, 10 A or class 20, selectable, and alarm circuit

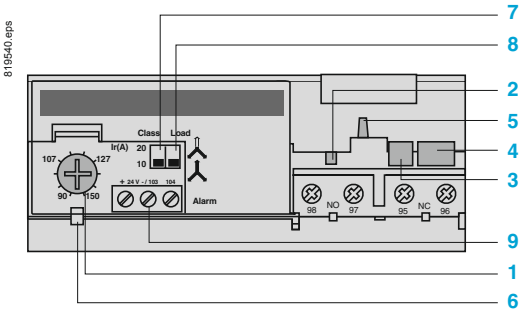

1 Ir adjustment dial
2 Test button
3 Stop button
4 Reset button
5 Trip indicator
6 Setting locked by sealing the cover
7 Class 10/class 20 selector switch
8 Selector switch for balanced load /unbalanced load
9 Alarm circuit

References:
pages B11/11 to B11/14
Characteristics:
pages B11/45 to B11/47
Dimensions, schemes:
pages B11/48 and B11/49

Protection components
TeSys LR9 F electronic thermal overload relays

Environment			
Conforming to standards			IEC 60947-4-1, IEC 60255-8, IEC 60255-17, EN 60947-4-1 and VDE 0660
Product certifications			UL 508, CSA 22-2
Degree of protection	Conforming to VDE 0106		IP 20
	Conforming to IEC 60529		IP 20 on front of relay with accessories **LA9 F103** or **LA7 F70●**, see page B11/14
Protective treatment	Standard version		"TH"
Ambient air temperature around the device (conforming to IEC 60255-8)	Storage	**°C**	-40…+85
	Normal operation	**°C**	-20…+55 (1)
Maximum operating altitude	Without derating	**m**	2000
Operating positions without derating	In relation to normal vertical mounting plane		Any position
Shock resistance	Permissible acceleration conforming to IEC 60068-2-7		13 gn - 11 ms
Vibration resistance	Permissible acceleration conforming to IEC 60068-2-6		2 gn - 5 to 300 Hz
Dielectric strength at 50 Hz	Conforming to IEC 255-5	**kV**	6
Surge withstand	Conforming to IEC 61000-4-5	**kV**	4
Resistance to electrostatic discharge	Conforming to IEC 61000-4-2	**kV**	8 (in air) 6 (in indirect mode)
Resistance to radiated radio-frequency disturbance	Conforming to IEC 61000-4-3	**V/m**	10
Resistance to fast transient currents	Conforming to IEC 61000-4-4	**kV**	2
Electromagnetic compatibility	EN 50081-1 and 2, EN 50082-2		Conforming

(1) For operating temperatures up to 70 °C, please consult your Regional Sales Office.

Overload relays

Protection components
TeSys LR9 F electronic thermal overload relays

Overload relays

Electrical characteristics of power circuit

Relay type			LR9	F5●57, F57	F5●63, F63 F5●67, F67 F5●69, F69	F5●71, F71	F7●75, F75 F7●79, F79	F7●81, F81
Rated insulation voltage (Ui)	Conforming to IEC 60947-4		**V**	1000				
Rated operational voltage (Ue)	Conforming to VDE 0110 gr C		**V**	1000				
Rated impulse withstand voltage (Uimp)	Conforming to IEC 60947-1		**kV**	8				
Rated operational current (Ie)			**A**	30 to 630				
Short-circuit protection and coordination				See pages: A6/11, A6/12, A6/15 and A6/16				
Frequency limits	Of the operating current		**Hz**	50…60. For other frequencies, please consult your Regional Sales Office (1)				
Power circuit connections	Width of terminal lug		**mm**	20	25	25	30 **LR9 F7●75** and **LR9 F75** 40 **LR9 F7●79** and **LR9 F79**	40
	Clamping screw			M6	M8	M10	M10	M12
	Tightening torque		**N.m**	10	18	35	35	58

Auxiliary contact electrical characteristics

Conventional thermal current			**A**	5	
Short-circuit protection	By gG or BS fuses or by circuit-breaker **GB2 CD10**		**A**	5	
Control circuit connections	Flexible cable with cable end			**Min.**	**Max.**
		1 conductor	**mm²**	1 x 0.75	1 x 2.5
		2 conductors	**mm²**	2 x 1	2 x 1.5
	Flexible cable without cable end	1 conductor	**mm²**	1 x 0.75	1 x 4
		2 conductors	**mm²**	2 x 1	2 x 2.5
	Solid cable	1 conductor	**mm²**	1 x 0.75	1 x 2.5
		2 conductors	**mm²**	2 x 1	–
	Tightening torque		**N.m**	1.2	

Maximum sealed current consumption of the coils of associated contactors (occasional operating cycles of contact 95-96)	a.c. supply	**V**	24	48	110	220	380	600
		VA	100	200	400	600	600	600
	d.c. supply	**V**	24	48	110	220	440	–
		W	100	100	50	45	25	–

(1) For applications involving the use of these overload relays with soft starters or variable speed drives, please consult your Regional Sales Office.

References:
pages B11/11 to B11/14

Presentation:
page B11/44

Dimensions, schemes:
pages B11/48 and B11/49

Protection components
TeSys LR9 F electronic thermal overload relays

Overload relays

Operating characteristics

Tripping class	Conforming to IEC 60947-4-1			10, 10 A and 20
Temperature compensation			°C	-20…+70
Reset				Manual on front of relay
Fault indication				On front of relay
Test function				On front of relay
Stop function				Actuation of N/C contact, without affecting N/O contact
Tripping thresholds	Conforming to IEC 60947-4-1	Alarm	A	1.05 ± 0.06 In
		Tripping	A	1.12 ± 0.06 In
Sensitivity to phase failure	Conforming to IEC 60947-4-1			Tripping in 4 s ± 20 % in the event of phase failure
Adjustment (nominal motor current)				Setting dial on front of relay
Security sealing				Yes

Alarm circuit characteristics

Rated supply voltage	d.c. supply	V	24
Supply voltage limits		V	17…32
Current consumption	No-load	mA	≤ 5
Switching current		mA	0…150
Protection	Short-circuit and overload		Auto-protected
Voltage drop	Closed state	V	≤ 2.5
Connection	Flexible cable without cable end	mm^2	0.5…1.5
Tightening torque		N.m	0.45

LR9 F tripping curve

Average operating times depending on multiples of the setting current

Class 10

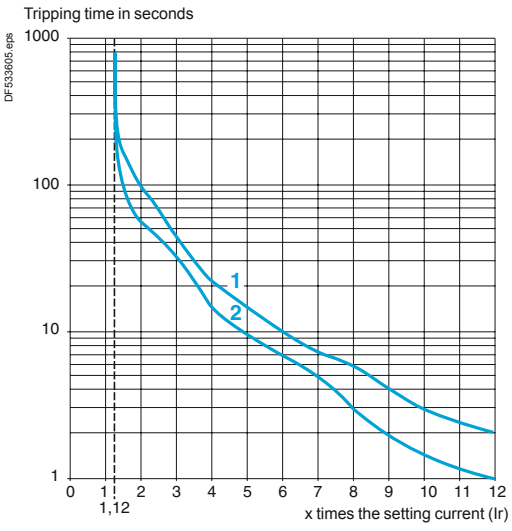

Class 20

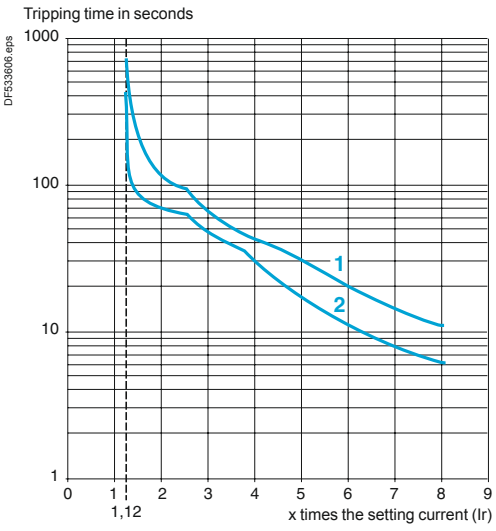

1 Cold state curve
2 Hot state curve

Overload relays

References:
pages B11/11 to B11/14

Presentation:
page B11/44

Dimensions, schemes:
pages B11/48 and B11/49

Protection components

TeSys LR9 F electronic thermal overload relays

Overload relays

Common side view

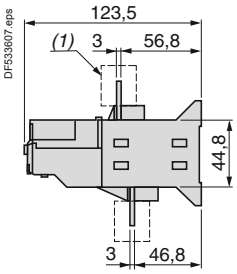

LR9 F5●71, F71

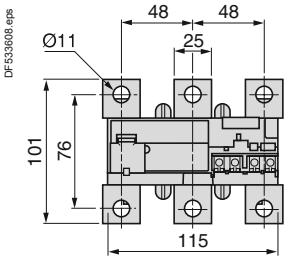

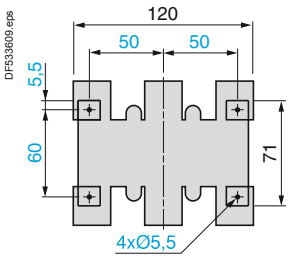

LR9 F5●57, F5●63, F5●67, LR9 F5●69, F57, F63, F67, F69

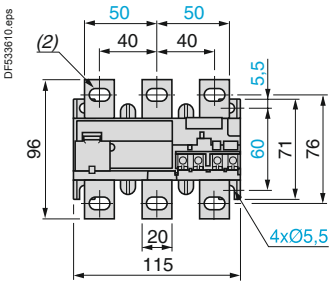

*(1) Terminal shroud **LA9 F70●***

*(2) 6.5 x 13.5 for **LR9 F5●57** and **F57**. 8.5 x 13.5 for **LR9 F5●63**, **F5●67**, **F5●69**, **F63**, **F67**, **F69***

Common side view

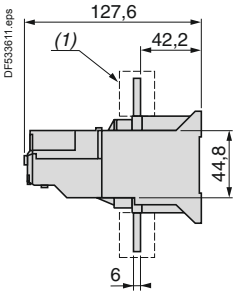

*(1) Terminal shroud **LA9 F70●***

LR9 F7●75, F7●79, F7●81, LR9 F75, F79, F81

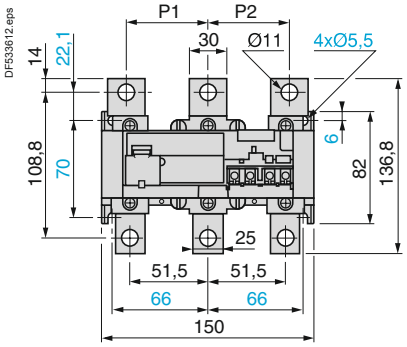

	P1	P2
LR9 F7●75, F75	48	48
LR9 F7●79, F7●81, F79, F81	55	55

LR9 F7●81 (for mounting beneath LC1 F630 and F800), LR9 F81

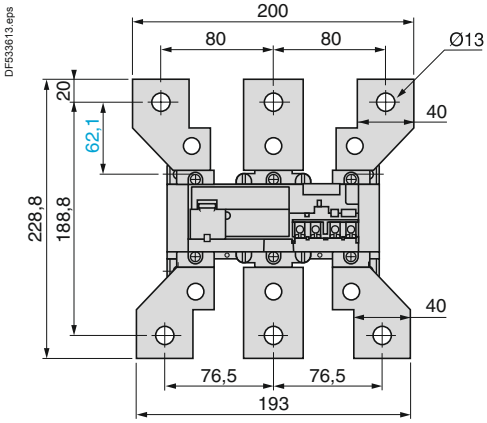

Direct mounting beneath contactor LC1 F

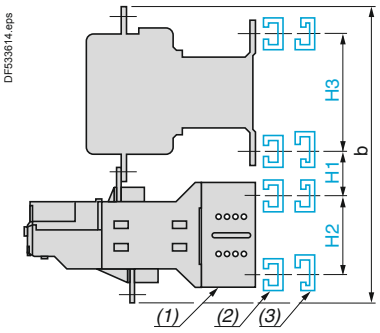

Mounting beneath contactors: reversing LC2 F or star-delta LC3 F

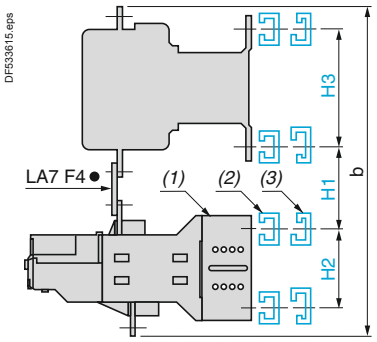

Mounting plate for LR9 F

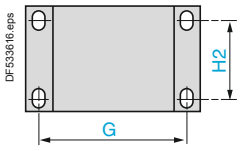

LA7	G
F901	145
F902	190

Contactors LC1	With LR9 relays	b	H1	H2	H3
F115	F5●57, F5●63, F5●67, F5●69, F57, F63, F67, F69	240	30	50	120
F150	F5●57, F5●63, F5●67, F5●69 F57, F63, F67, F69	246	30	50	120
F185	F5●57, F5●63, F5●67, F5●69 F57, F63, F67, F69	250	30	50	120
F225	F5●71, F71	273	40	50	120
	F7●75, F7●79, F75, F79	308	50	58	120
F265	F5●71, F71	279	40	50	120
	F7●75, F7●79, F75, F79	314	60	58	120
F330	F7●75, F7●79, F75, F79	317	60	58	120
F400	F7●75, F7●79, F7●81, F75, F79, F81	317	60	58	180
F500	F7●75, F7●79, F7●81, F75, F79, F81	346	70	58	180
F630, F800	F7●81, F81	510	110	58	180

*(1) Relay mounting plate **LA7 F90●**, see page B11/14*

*(2) **AM1 EC** or **AM1 DF** for **LC1 F115** to **F630** and **LC1 F800***

Contactors LC1	With LR9 relays	b	H1	H2	H3
F115	F5●57, F5●63, F5●67, F5●69, F57, F63, F67, F69	279	60	50	120
F150	F5●57, F5●63, F5●67, F5●69 F57, F63, F67, F69	283	60	50	120
F185	F5●57, F5●63, F5●67, F5●69 F57, F63, F67, F69	285	60	50	120
F225	F5●71, F71				
	F7●75, F7●79, F75, F79	360	100	58	120
F265	F5●71, F71	332	90	50	120
	F7●75, F7●79, F75, F79	363	100	58	120
F330	F7●75, F7●79, F75, F79	364	100	58	120
F400	F7●75, F7●79, F7●81, F75, F79, F81	364	100	58	180
F500	F7●75, F7●79, F7●81, F75, F79, F81	390	110	58	180
F630, F800	F7●81, F81	509	120	58	180

*(3) **DZ5 MB** for **LC1 F115** to **F400***

References: pages B11/11 to B11/14
Presentation: page B11/44
Characteristics: pages B11/45 to B11/47
Schemes: page B11/49

Protection components

TeSys LR9 F electronic thermal overload relays

Schemes

LR9 F5●57…F7●81

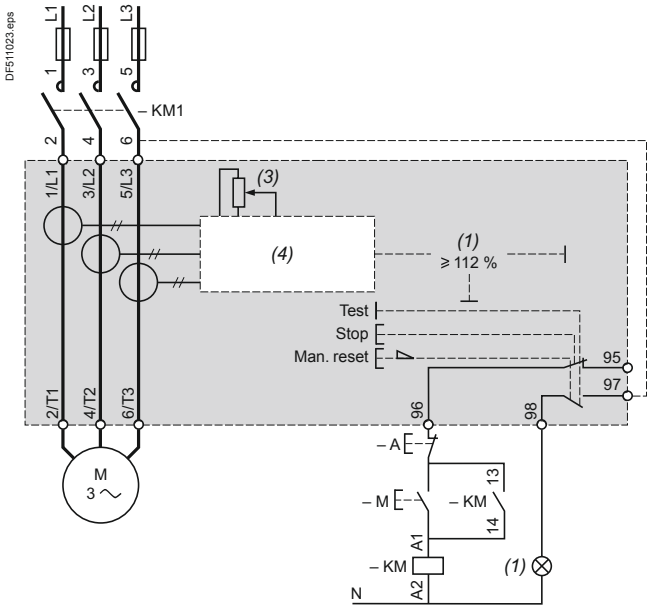

LR9 F57…F81 (with alarm)

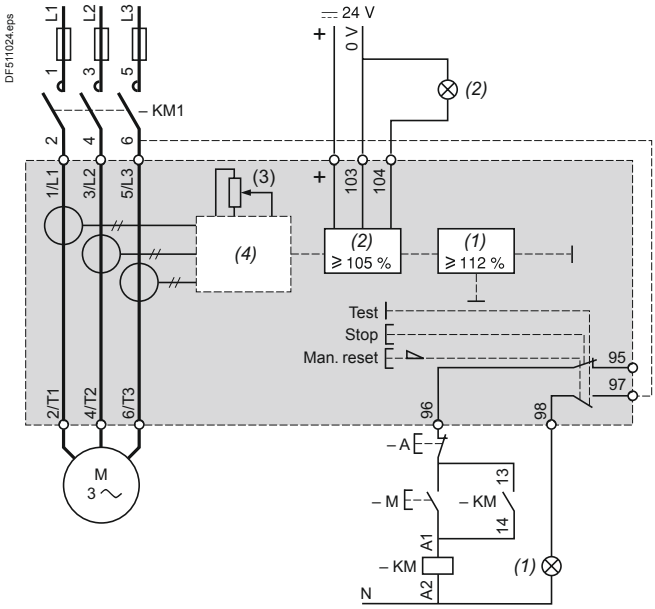

(1) Tripped on thermal overload.
(2) Overheating alarm.
(3) Setting current.
(4) Specialised circuit.

Setting-up the special functions of TeSys LR9 F thermal overload relays

Setting the relay

- Lift the transparent cover 7 to gain access to the various settings.
- Adjustment is achieved by turning dial 1 which is graduated directly in Amperes.
- The setting can be locked by sealing the cover 7.

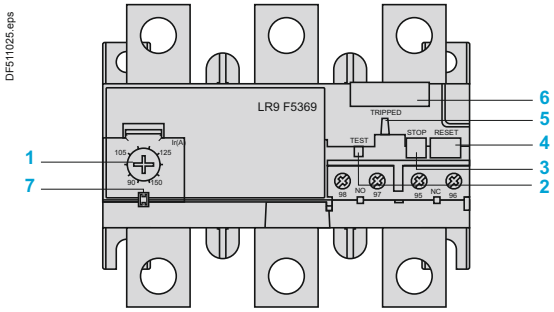

"Stop" function 3

Stop

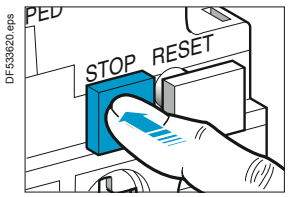

- The "Stop" function is obtained by pressing the red "STOP" button 3.
- Pressing the Test button:
  - ☐ actuates the N/C contact,
  - ☐ has no effect on the N/O contact.
- The "STOP" button can be locked by fitting a "U" clip (reference: **LA7 D901**).

"Test" function 2

Test

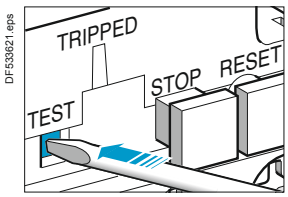

Trip indicator

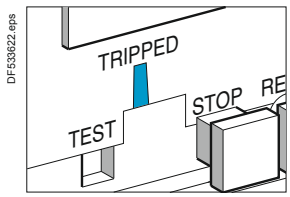

- The "Test" function is obtained by pressing the red "TEST" button 2 with a screwdriver.
- Operation of the "TEST" button simulates tripping of the relay and:
  - ☐ actuates both the N/O and N/C contacts,
  - ☐ actuates the trip indicator 5.

Overload relays

Protection components

TeSys RM1 single-pole magnetic over current relays

Presentation

The RM1 XA electromagnetic relay detects over current peaks in excess of the maximum permissible current value. It is designed for the protection of circuits which are not subject to current peaks (starters, resistors) or for controlling starting peaks on slip ring motors.

It trips instantaneously and is not suitable for frequent operation (12 operating cycles per hour). It can withstand a continuous current equivalent to 1.25 times the minimum setting current.

Environment characteristics

Conforming to standards		Standard version NF C 63-650, VDE 0660
Approvals		CSA
Protective treatment		Standard version “TC”, special version “TH”
Ambient air temperature around the device	**°C**	Storage: - 60…+ 70 Operation: - 40…+ 60
Maximum operating altitude	**m**	3000
Operating position		± 15° in relation to normal vertical mounting position

Electrical characteristics of power circuit

Maximum rated operational voltage	**V**	∼ or ⎓ 600
Frequency limits of the rated operational current	**Hz**	0…60

Electrical characteristics of auxiliary contacts

Conventional thermal current			**A**	10				
Occasional making and breaking capacities	a.c. supply	Voltage	**V**	48	110	220	380	600
		Power (1)	**VA**	4000	12 000	17 000	22 000	–
	d.c. supply	Voltage	**V**	48	110	220	440	600
		Power (2)	**W**	240	200	190	180	180

(1) Circuit such as the electromagnet of a contactor - cos φ inrush: 0.7 and cos φ sealed: 0.4.
(2) Circuit such as an electromagnet without economy resistor ; time constant varying from 20 ms for 5 W to 200 ms for 100 W or more.

Operating times

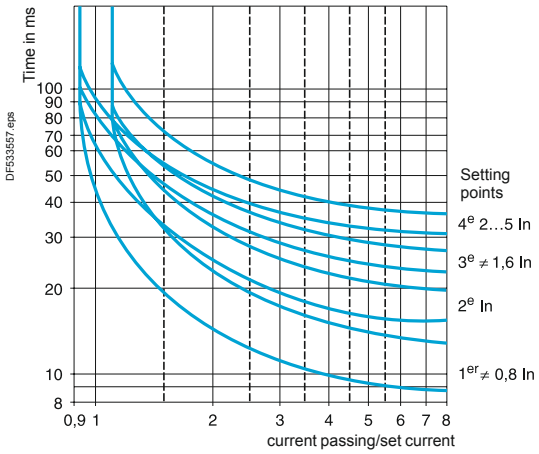

Operating times: because of the numerous applications for RM1 XA over current relays, it is not possible to give precise operating times. The curves shown are therefore purely indicative.

References: pages B11/15 and B11/16
Dimensions: page B11/51
Schemes: page B11/51

Protection components

TeSys RM1 single-pole magnetic over current relays

Dimensions

RM1 XA●●●, RM1 XA●●●1

Common side view

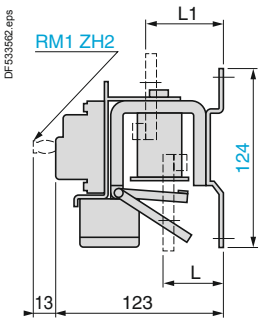

RM1 XA001…XA040 RM1 XA0011…XA0401

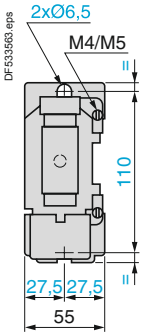

RM1 XA063, XA100 and XA315 RM1 XA0631, XA1001 and XA3151

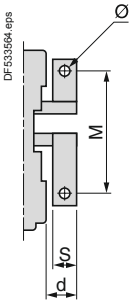

RM1 XA160, XA200, and XA500 RM1 XA1601, XA2001, and XA5001

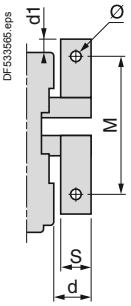

RM1 XA101, RM1 XA1011

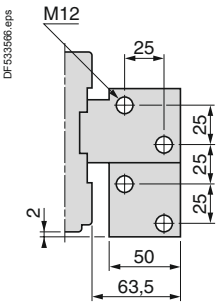

RM1 XA●●●1 with electrical reset ER1 XA2●

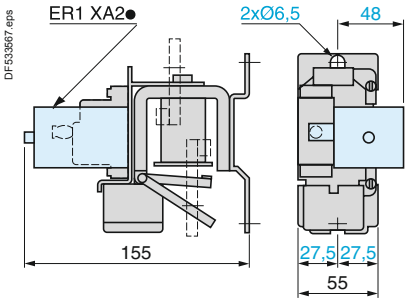

RM1	d	d1	M	L	L1	S	Ø
XA 063	20.5	–	83	25	40	15	M6
XA 100	20.5	–	87	25	40	20	M8
XA 160	27.5	5.5	94	25	40	25	M8
XA 200	27.5	5.5	94	25	40	25	M8
XA 315	35.5	–	74	44	55	30	M10
XA 500	40.5	7	84	44	55	40	M10
XA 101	–	–	–	37	64	–	–

Schemes

RM1 XA●●●1

Latching

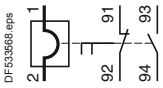

RM1 XA●●●

Non-latching

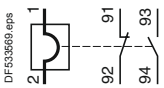

RM1 XA

3-wire control (without mechanical latching)

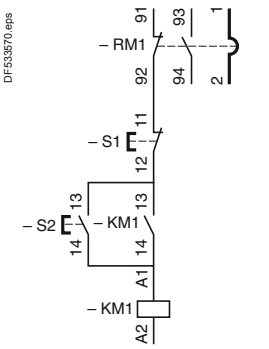

2-wire control (with mechanical latching)

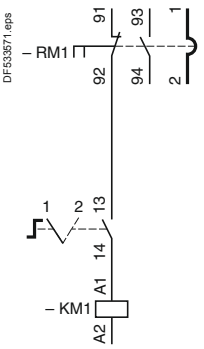

3-wire control (with "trip" signal)

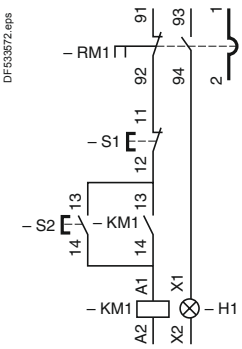

References:
pages B11/15 and B11/16

Characteristics:
page B11/50

Protection components

TeSys LT3 thermistor protection units for use with PTC thermistor probes (1)

Application

LT3 S● thermistor protection units continuously monitor the temperature of the machines to be protected (motors, generators, etc.) by means of PTC thermistor probes embedded in the machine windings.

If the nominal operating temperature of the probes is reached, they convert the rapid increase in resistance into a switching function which can be used to switch off the machine or signal a fault (see paragraph relating to thermistor probes below).

Accidental breaks in the supply circuits of the thermistors are also detected.

Electromagnetic compatibility

Conforming to “Electromagnetic compatibility” directive.
Conforming to standard EN 61000-6-2.

Resistance to electrostatic discharge (conforming to IEC 61000-4-2)	**Level 3**
Resistance to fast transients (conforming to IEC 61000-4-4)	**Level 3**
Susceptibility to electromagnetic fields (conforming to IEC 61000-4-3)	**Level 3**
Surge resistance 1.2/50 - 8/20 (conforming to IEC 61000-4.5)	**Level 4**
Immunity to microbreaks and voltage drops (IEC 61000-4-11)	
Suitable for use with variable speed controllers	

Thermistor probes

Range of most commonly used PTC thermistor probes:
from 90 to 160 °C, in steps of 10 °C.
Curve R = f (θ), characteristic of a PTC thermistor probe, is defined by standard IEC 60947-8.

The choice of PTC thermistor probe to be incorporated in the motor winding depends on the insulation class, the type of motor and the most suitable location for the probe. This choice is usually made by the motor manufacturer or the motor rewinder, who have all the necessary information.

Application example

Insulation class of rotating machines conforming to IEC 60034-11 (S1 duty)	NOT Nominal operating temperature	Temperature at which rapid increase in resistance occurs Probes used for Alarm	Fault
	°C	**°C**	**°C**
A	100	100	100
B	110	110	120
E	120	120	130
F	140	140	150
H	160	160	170

(1) PTC: Positive Temperature Coefficient.

References:
pages B11/17 and B11/18

Characteristics:
pages B11/53 to B11/55

Dimensions, schemes:
pages B11/56 and B11/57

Protection components

TeSys LT3 thermistor protection units for use with PTC thermistor probes (1)

Overload relays

Protection unit type				LT3 SE	LT3 SA	LT3 SM
Reset method				Automatic	Automatic	Manual/Automatic
Fault indication				–	On front panel of unit and remote	On front panel of unit and remote
Fault test				–	–	By pushbutton on front panel of unit
Probe interchangeability				Label "Mark A" to IEC 60034-11	Label "Mark A" to IEC 60034-11	Label "Mark A" to IEC 60034-11
Environment						
Conforming to standards				IEC 60034-11 VDE 0660	IEC 60034-11 VDE 0660	IEC 60034-11 VDE 0660
Product certifications				–	LROS	
Degree of protection				IP 20 conforming to IEC 60529, VDE 0106		
CE marking				LT3 S● protection units have been designed to comply with the basic recommendations of European directives relating to low voltage and EMC. Therefore LT3 S● products bear the European Community CE mark.		
Ambient air temperature around the device	Storage Conforming to IEC 60068-2-1 and 2-2		°C	- 40…+ 85		
	Operation		°C	- 25…+ 60		
Maximum operating altitude	Without derating			1500 m		
	With derating			Up to 3000 m, the maximum permissible ambient air temperature for operation (60 °C) must be reduced by 5 °C per additional 500 m above 1500 m		
Vibration resistance	Conforming to IEC 60068-2-6			2.5 gn (2…25 Hz) 1 gn (25…150 Hz)		
Shock resistance	Conforming to IEC 60068-2-27			5 gn (11 ms)		
Operating positions without derating	In relation to normal vertical mounting plane			Any position		
Power supply circuit characteristics						
Rated control circuit voltage (Uc)	~ 50/60 Hz	Single voltage	V	115 or 230	–	400
	0.85…1.1 Uc	Dual voltage	V	–	115/230	115/230. 24/48
	~ 50/60 Hz 0.85…1.1 Uc	Multivoltage	V	–	24…230	24…230
	⎓	Single voltage	V	24	–	–
	0.8…1.25 Uc	Dual voltage	V	–	24/48	24/48
	0.85…1.1 Uc	Multivoltage	V	–	24…230	24…230
Average consumption	Sealed	~	VA	< 2.5	< 2.5	< 2.5 except (400 V: 2.7)
		⎓	W	< 1	< 1	< 1

(1) PTC: Positive Temperature Coefficient

References: pages B11/17 and B11/18
Dimensions: page B11/56
Schemes: pages B11/56 and B11/57

Protection components
TeSys LT3 thermistor protection units for use with PTC thermistor probes (1)

Overload relays

Control circuit characteristics

Protection unit type				LT3 SE	LT3 SA	LT3 SM
Resistance	Tripping		Ω	2700…3100	2700…3100	2700…3100
	Reset		Ω	1500…1650	1500…1650	1500…1650
Maximum number of probes fitted in series (2)	Probes ≤ 250 Ω at 25°			6	6	6
Voltage at terminals in the thermistor circuit	Normal operation (R = 1500 Ω)		**V**	< 2.5	< 2.5	< 2.5
	Conforming to IEC 60034-11 (R = 4000 Ω)		**V**	< 7.5	< 7.5	< 7.5
Thermistor probe short-circuit detection	Operating threshold		Ω	–	< 20	< 20
Connection of probes to the LT3	Distance		**m**	300	400	500	1000 (3)
	Minimum c.s.a. of conductors		**mm²**	0.75	1	1.5	2.5

Electrical characteristics of the output relay contacts

Contact type	Single voltage or dual voltage			1 N/C	1 N/C + 1 N/O	1 N/C + 1 N/O
	Multivoltage			–	2 C/O	2 C/O
Rated insulation voltage			**V**	∼ 500		
Maximum operational voltage			**V**	∼ 250 (∼ 400 V for **LT3 SM00V**)		
Rated impulse withstand voltage	Uimp		**kV**	2.5		
Conventional thermal current			**A**	5		
Operational power	At 220 V		**VA**	100 for 0.5 million operating cycles		
Breaking capacity	In cat. AC-16	120 V	**A**	6		
		250 V	**A**	3		
	In DC-13	24 V	**A**	2		
Cabling (cage type connector) for flexible or solid cable	Without cable end		**mm²**	2 x 1…1 x 2.5		
	With cable end		**mm²**	1 x 0.75…2 x 2.5		
Tightening torque			**N.m**	0.8		

Thermistor probe characteristics

Probe type			DA1 TT●●●	DA1 TS●●●
Conforming to standards			IEC 60034-11. Mark A	
Resistance	At 25 °C	Ω	3 x 250 in series	250
Rated operational voltage (Ue)	Per probe	**V**	⎓ 2.5 V max	⎓ 2.5 V max
Rated insulation voltage (Ui)		**kV**	2.5	1
Insulation			Reinforced	Reinforced
Length of connecting cables	Between probes	**mm**	250	–
	Between probe and motor terminal plate	**m**	1	1

(1) PTC: Positive Temperature Coefficient.
(2) Provided that the total resistance of the probe circuit is less than 1500 Ω at 20 °C.
(3) For distances greater than 500 m take cabling precautions (twisted shielded pairs).

References: pages B11/17 and B11/18
Dimensions: page B11/56
Schemes: pages B11/56 and B11/57

Protection components

TeSys LT3 thermistor protection units for use with PTC thermistor probes (1)

LT3 S protection unit/thermistor probe combination

Guaranteed operating zones: examples with 3 probes type DA1 TT●●● (250 Ω at 25 °C) in series, conforming to standard IEC 60034-11, Mark A.

LT3 SE, LT3 SA, LT3 SM protection units

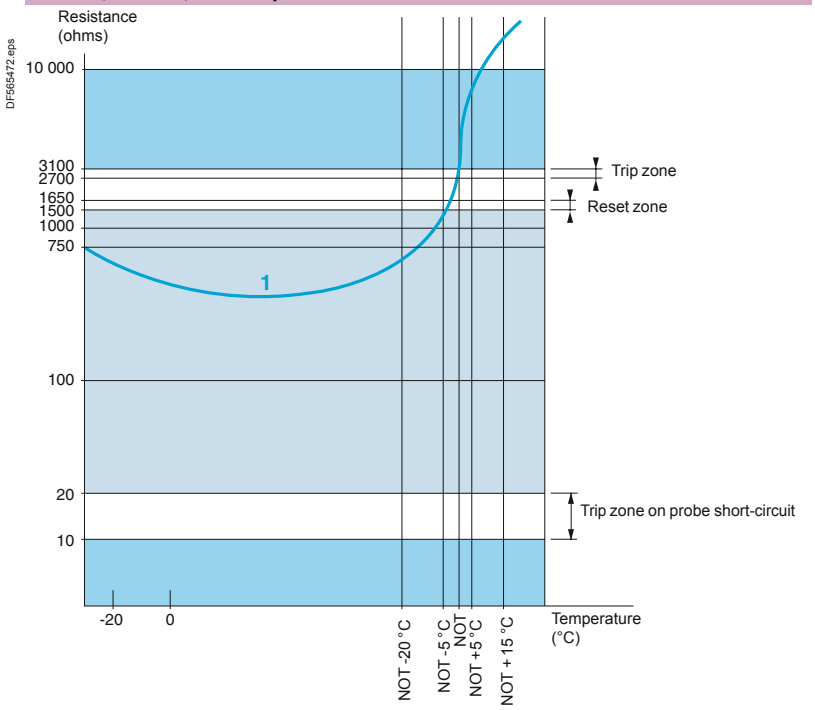

1 3 probes type DA1 TT●●● (250 Ω at 25 °C) in series.

NOT: Nominal Operating Temperature

Protection unit tripped.

Protection unit reset.

(1) PTC: Positive Temperature Coefficient.

References:
pages B11/17 and B11/18

Dimensions:
page B11/56

Schemes:
pages B11/56 and B11/57

Protection components

TeSys LT3 thermistor protection units for use with PTC thermistor probes (1)

Dimensions

LT3 SE, SA, SM

Mounting on ⊥ rail AM1 DP200

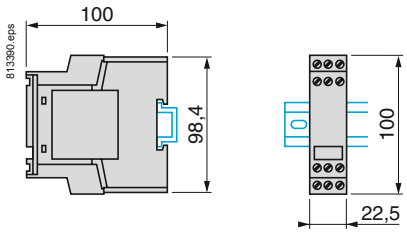

Mounting on 1 ⊔ rail
(with adapter RHZ 66)

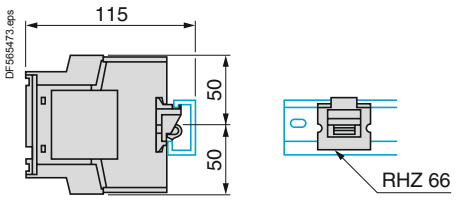

Schemes for "no fault" operation

LT3 SE

Without fault memory

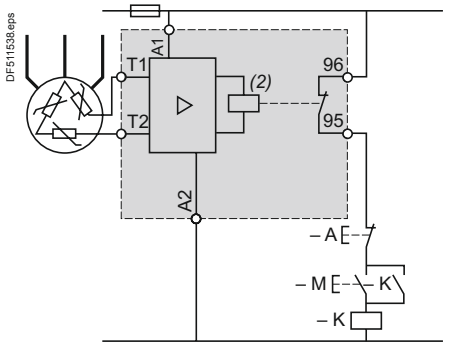

LT3 SA dual voltage

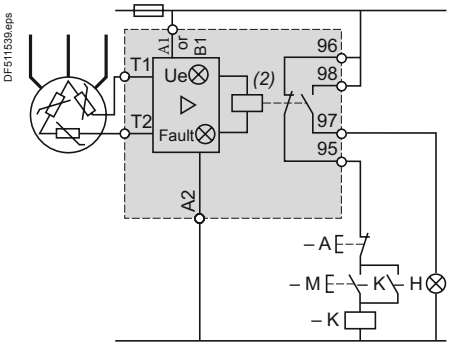

LT3 SA multivoltage

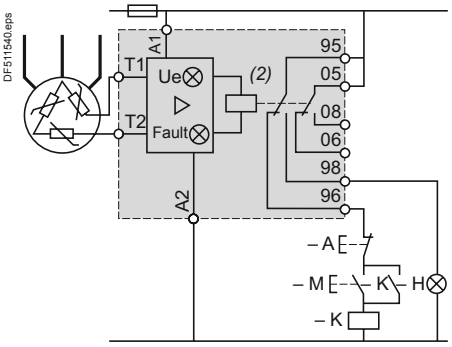

LT3 SM dual voltage and 400 V (without B1)

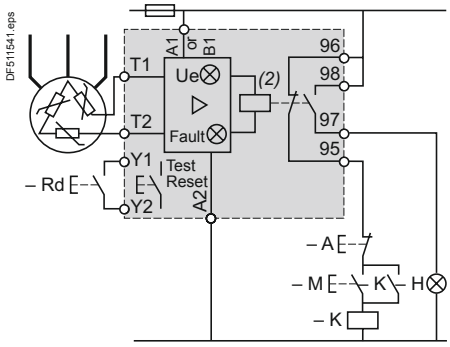

LT3 SM multivoltage

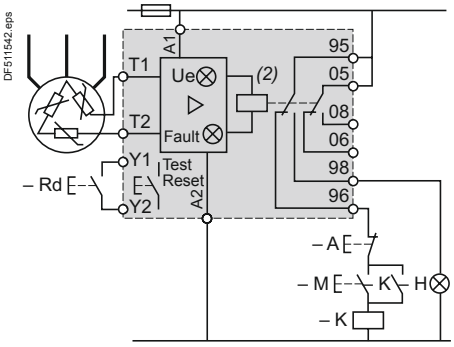

LT3 S● dual voltage

Terminal	A1	B1
Voltage	48 V	24 V
	230 V	115 V

Setting-up

Cabling

It is inadvisable to use the same multi-core cable for the thermistor probe circuit and the power circuit. This is especially important for long cable runs.
If it is impossible to comply with the above recommendation, a pair of twisted conductors must be used for the thermistor probe circuit.

Testing the insulation of the line connecting the thermistors to the LT3 S unit

Before carrying out this test, short-circuit all the terminals of the LT3 S protection unit.
Measure the insulation value between these terminals and earth using a megger or a flash tester, progressively increasing the voltage to the value defined by the standards.

Checking the PTC thermistor probes for correct operation

With the machine stopped, in the cold state and after having taken all the necessary safety precautions:
- disconnect the line linking the thermistors to the LT3 S protection unit, at the terminals of the machine being protected: motor, etc.,
- using an ohmmeter with a voltage rating less than or equal to 2.5 V, measure the resistance of the probe circuit at the machine terminals,
- depending on the number and type of thermistors connected in series, check that their resistance value at 25 °C is correct.

Example: motor fitted with 3 PTC thermistor probes with a resistance ⩽ 250 Ω at 25 °C.
Any value higher than 250 x 3 = 750 Ω indicates a problem.

(1) PTC: Positive Temperature Coefficient.
(2) Relay energised: the contacts are shown in the "operating" position.

References:
pages B11/17 and B11/18

Characteristics:
pages B11/53 to B11/55

Protection components

TeSys LT3 thermistor protection units for use with PTC thermistor probes (1)

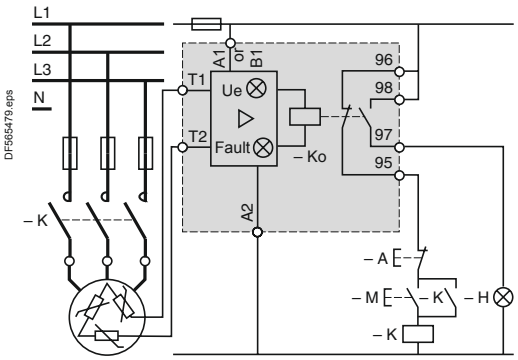

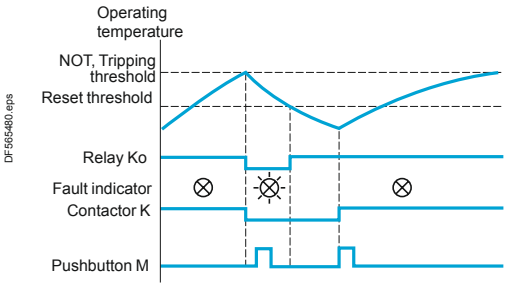

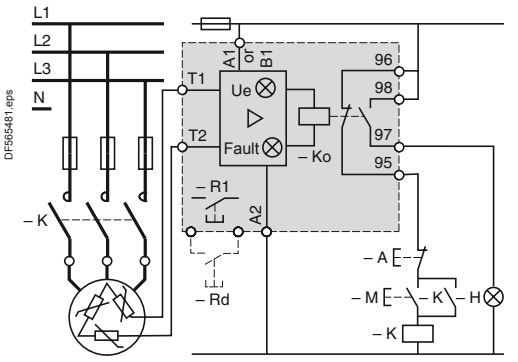

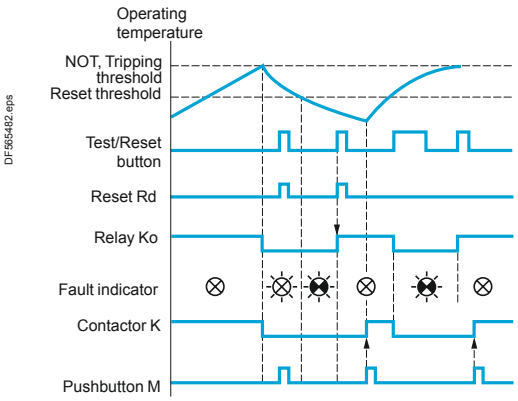

LT3 SA protection units

Starting

The LT3 SA is normally energised and its internal relay is in the pre-energised position.
The motor is started by operating pushbutton M automatically held in by K (3-wire control circuit).

Thermal fault

The strong increase in resistance of the PTC probes at the moment their temperature reaches the nominal operating temperature (NOT) is detected by the LT3 SA unit and causes the relay to drop out; indicator H comes on, as does the built-in indicator on unit LT3 SA.
Contactor K drops out and pressing button M has no effect.

Reset

As the motor cools, it reaches the reset threshold, 2 to 3 °C below the nominal operating temperature.
The relay resets and the motor can be started by pressing button M.

LT3 SM protection units

Operation is very similar to that described above, except for the following:

Reset

After tripping on thermal fault and cooling to the reset threshold, the Test/RESET button on the unit (R1) or a remote reset button (Rd) must be pressed to energise the relay.

The fault is therefore memorised, even though the temperature of the probes has dropped to well below the reset threshold.

Signalling circuit

As the relay is fitted with 2 separate contacts, the signalling voltage may be different from the contactor control voltage.

Test

Pressing the Test/RESET button simulates a fault and causes the relay to drop out: the FAULT indicator comes on, as does the remote signalling indicator. The unit is reset by pressing the Test/RESET button again.

(1) PTC: Positive Temperature Coefficient.

References:
pages B11/17 and B11/18

Characteristics:
pages B11/53 to B11/55

TeSys protection components
TeSys LR97 - TeSys LT47 electronic over current relays

Presentation

DF526329-40-M.tif



LR97 D

DF526330-40-M.tif



LT47

LR97 D and LT47 electronic over current relays have been developed to satisfy machine protection requirements.
These relays have definite time characteristics: current threshold and time based function.
They are particularly recommended for providing mechanical protection on machines with high resistive torque, high inertia and with strong probability of jamming under steady state conditions.
They can be used for motor protection in the case of long starting times or frequent starting.
The LR97 D relay also incorporates two fixed time protection functions, one of 0.5 seconds against locked rotor and one of 3 seconds against phase failure.
LR97 D and LT47 can be used to provide mechanical shock protection. In this case, setting the O-Time knob to minimum will ensure tripping in 0.3 seconds.

Applications

LR97 D and LT47 relays are particularly suitable for the following machines:
- ■ Monitoring function for excessively long starting time on machines with a risk of difficult starting:
- □ Machines with high resistive torque, high inertia machines.
- ■ Monitoring of machines during steady state operation: overtorque detection function
- □ Machines with strong risk of jamming, machines with torque build-up over time,
- □ Mechanical failure monitoring,
- □ Faster detection of malfunctioning on machines where the motor is oversized in relation to its thermal protection I^2t.
- ■ Motor protection for specific applications:
- □ Machines with long starting times,
- □ Machines with high on-load factor: more than 30 to 50 starts/hour,
- □ Machine with fluctuating load from a steady state, where the thermal image of a thermal overload relay (thermal memory) is unsuitable in relation to actual overheating of the motor.

Examples of machines:
- □ Conveyors, crushers and mixers,
- □ Fans, pumps and compressors,
- □ Centrifuges and spin-dryers,
- □ Presses, shearing machines, saws, broaching machines, sanders and lifting hoists.

Operation

Because of their two separate time settings, LR97 D and LT47 relays can be combined with the motor-starter function:
D-Time: starting time, O-Time: trip time during steady state.
The D-Time function is only available during the motor starting phase. During this phase the overload detection function is inhibited in order to allow starting. Under steady state conditions, when the motor current is greater than the setting current due to an overload or single-phasing, the red LED lights up and the internal relay switches its contact after a time preset by the O-Time knob.
The red LED stays on, indicating that the relay has tripped.

The relays are simple to set, in 5 easy steps:
- Adjust the 3 knobs to maximum (Load, D-Time and O-Time),
- Adjust the D-Time knob to the value corresponding to the motor starting time.
- When the motor reaches steady state, adjust the Load knob (turn the knob counter-clockwise until the red LED starts to flicker).
- Slowly turn the Load knob clockwise until the LED goes out.
- Set the required tripping time, using the O-Time knob.

Description

Description

LR97 D●●●●●

DF531695.eps

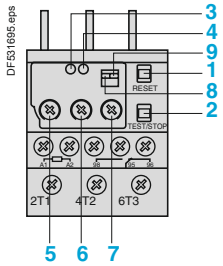

LT47 ●●●●●

DF531696.eps

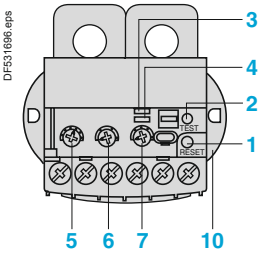

1 RESET knob
2 TEST/STOP knob
3 Ready/Run Indicator
4 Relay tripped indicator
5 Current setting
6 Adjustment of starting time
7 Adjustment of tripping time
8 Manual/Auto adjustment
9 Single-phase/3-phase adjustment
10 Retractable fixing lugs

Status signalling

LR97 D●●●●●

To assist fast diagnostics, two LEDs (one green and one red) allow signalling of the operating status:

DF563948.eps

Status			LED signal	
			Green LED	Red LED
Voltage			On	Off
Starting				
Steady state			On	Off
Overload			On	
Trip	Over-current		Off	On
	Rotor locked		Off	
	Phase failure	L1	Off	
		L2	Off	
		L3	Off	

LT47 ●●●●●

DF563947.eps

Condition	LED signal	
	Green LED	Red LED
Voltage	On	Off
Starting		
Steady state	On	Off
Overload	On	
Trip	Off	On

References: page B11/19
Curves: pages B11/59 and B11/60
Characteristics: pages B11/60 and B11/61
Dimensions, mounting: page B11/62
Schemes: page B11/62

Curves

LR97 D

Overload protection
Protection against locked rotor and mechanical jamming under steady state conditions

DF53221B.eps

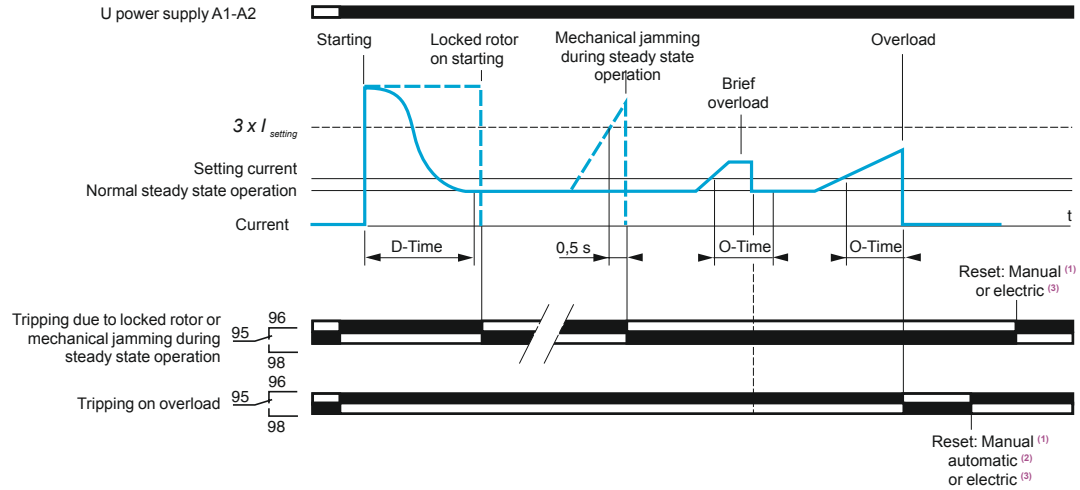

Overload protection
Protection against phase failure during starting and during steady state operation

DF53221B.eps

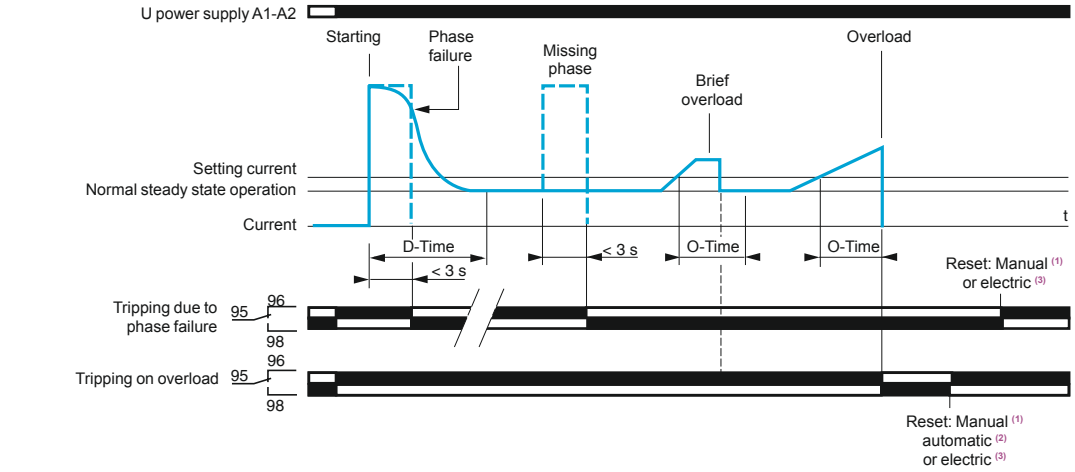

Mechanical shock protection

DF532220.eps

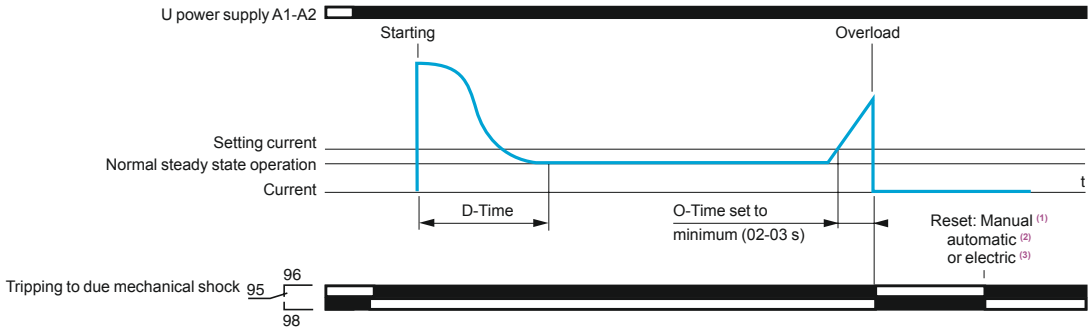

(1) By Reset button.
(2) Fixed time of 120 s. Selectable by dip switch. Function not available in the event of tripping due to locked rotor/mechanical jamming (I> 3 x I setting) or phase failure.
(3) By brief interruption of power supply, minimum 0.1 s.

TeSys protection components
TeSys LR97 - TeSys LT47 electronic over current relays

Curves

LT47

Overload protection

DF532221.eps

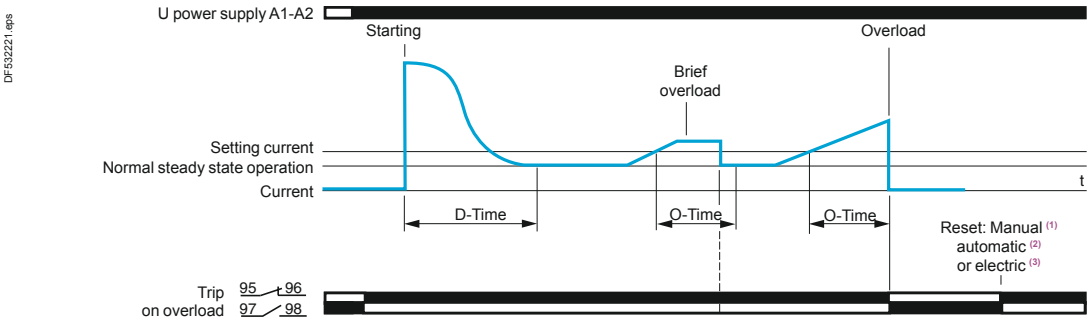

Mechanical shock protection

DF532222.eps

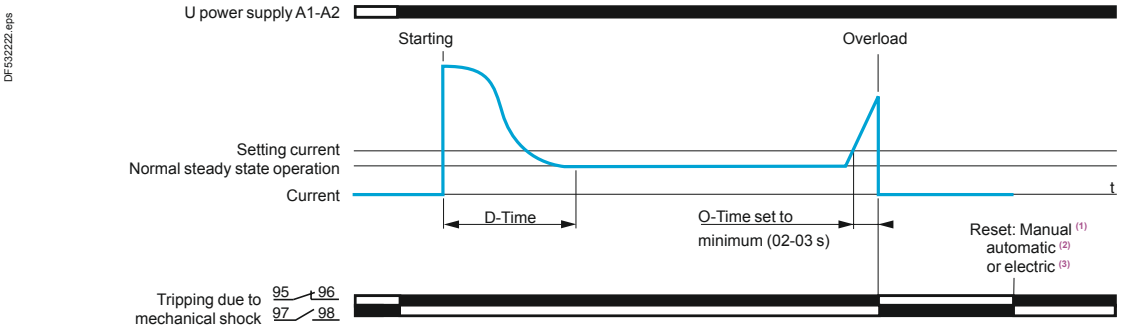

(1) By Reset button.
(2) Only available on version with automatic reset (LT47 ●●●●A). Time adjustable from 1 to 120 s with the R-Time knob.
(3) By brief interruption of power supply, minimum 0.1 s.

Characteristics

Environment

Relay type			LR97 D●●●●●	LT47 ●●●●●
Conforming to standards			IEC 60255-6, IEC 60947	IEC 60255-6, IEC 60947
Product certifications			UL, CSA	UL, CSA
Degree of protection	Conforming to IEC 60529 and VDE 0106		IP 20 (front face)	IP 20 (front face)
Protective treatment	Conforming to IEC 60068		"TH"	"TH"
Ambient air temperature around the device	Storage	**°C**	- 30…+ 80	- 30…+ 80
	Normal operation without derating (IEC 60947-4-1)	**°C**	- 25…+ 60	- 25…+ 60
Maximum operating altitude		**m**	2000	2000
Operating positions without derating	In relation to normal vertical mounting plane		Any position	Any position
Shock resistance	Permissible acceleration conforming to IEC 60068-2-7		15 gn - 11 ms	15 gn - 11 ms
Vibration resistance	Permissible acceleration conforming to IEC 60068-2-6		4 gn	4 gn
Dielectric strength at 50 Hz	Conforming to IEC 60255-5	**kV**	2	2
Surge withstand	Conforming to IEC 61000-4-5	**kV**	6	6
Resistance to electrostatic discharge	In open air	**kV**	8 (level 3)	8 (level 3)
	In direct mode	**kV**	6 (level 3)	6 (level 3)
Immunity to radiated radio-frequency disturbance		**V/m**	10 (level 3)	10 (level 3)
Immunity to fast transient currents		**kV**	2	2
Conducted emissions	Conforming to EN 55011		Class A	Class A
Conducted HF disturbance	Conforming to EN 61000-4-6	**V**	10	10

References:
page B11/19
Presentation, description:
page B11/58
Dimensions, mounting:
page B11/62
Schemes:
page B11/62

TeSys protection components

TeSys LR97 - TeSys LT47 electronic over current relays

Characteristics

Auxiliary contact characteristics

Relay type				LR97 D●●●●●				LT47 ●●●●●			
Contact type				1 NO/NC				1 N/O + 1N/C			
Conventional thermal current			A	3				3			
Maximum hold consumption of controlled contactor coils (occasional operating cycles of contact 95-96)	Conforming to IEC 60947		V	∼ 24	∼ 48	∼ 110	∼ 220	∼ 24	∼ 48	∼ 110	∼ 220
			VA	70	140	360	360	70	140	360	360
			V	⎓ 24	⎓ 48	⎓ 110	⎓ 220	⎓ 24	⎓ 48	⎓ 110	⎓ 220
			W	55	55	28	28	55	55	28	28
Short-circuit protection	By gG, BS fuses. Maximum rating or GB2 circuit breaker		A	3				3			
Connection by cable or lug-clamps											
Flexible cable without cable end	1 or 2 conductors	Min.	mm²	1 x 0.75				1 x 1			
		Max.	mm²	2 x 2.5				2 x 2.5			
Flexible cable with cable end	1 or 2 conductors	Min.	mm²	1 x 0.34				1 x 1			
		Max.	mm²	1 x 1.5 + 1 x 2.5				2 x 2.5			
External Ø of lugs			mm	7				7			
Ø of screw			mm	M3				M3.5			
Tightening torque			N.m	0.6…1.2				0.8...1.7			

Electrical characteristics of power circuit

Relay type				LR97 D015●● to LR97 D25●●	LR97 D38●●	LT47 ●●●●●
Setting range	Depending on model		A	0.3…38		0.5…60
Tripping class				Adjustable		Adjustable
Rated insulation voltage (Ui)	Conforming to IEC 60947-4-1		V	690		690
	Conforming to UL, CSA		V	600		600
Rated impulse withstand voltage (Uimp)			kV	6		6
Frequency limits	Of the operating current		Hz	50…60		50…60
Connection by cable or lug-clamps						
Flexible cable without cable end	1 conductor	Min.	mm²	1.5	2.5	–
		Max.		10	10	–
Flexible cable with cable end	1 conductor	Min.	mm²	1	1	–
		Max.		4	6	–
External Ø of lugs			mm	10	12	–
Ø of screw			mm	M4	M4	–
Tightening torque			N.m	2	2	–

Operating characteristics

Relay type				LR97 D●●●●●		LT47 ●●●●S		LT47 ●●●●A
Adjustment	Current		A	"Load" knob		"Load" knob		"Load" knob
	Time	D-time knob	s	0.5…30		0.5…30		–
		O-time knob	s	0.2/0.3…10		0.2/0.3…10		0.2/0.3…30
		R-time knob	s	–		–		1…120
Reset	Manual			Reset button		Reset button		Reset button
	Automatic			120 s fixed		–		R-time knob: 1-120 s
	Electrical			By interruption of power supply (minimum 0.1 s)		By interruption of power supply (minimum 0.1 s)		By interruption of power supply (minimum 0.1 s)
Protection functions				**On starting**	**Steady state**	**On starting**	**Steady state**	–
Overload $I_{max} > I_{setting}$	Tripping			Inhibited during D-time	After O-time	Inhibited during D-time	After O-time	After O-time
Locked rotor, mechanical jamming $I > 3 \times I_{setting}$	Tripping			After D-time	< 0.5 s	Inhibited during D-time	After O-time	After O-time
Sensitivity to phase failure	Tripping			< 3 s	< 3 s	Inhibited during D-time	After O-time	After O-time
Status and fault signalling (see table page 24517/2)				2 LEDs		2 LEDs		2 LEDs
TEST/STOP function	Test			No load		No load		No load
	Stop			Under load		Under load		Under load
Sealing				Yes		Yes		Yes

References: page B11/19 | Presentation, description: page B11/58 | Curves: pages B11/59 and B11/60 | Dimensions, mounting: page B11/62 | Schemes: page B11/62

TeSys protection components

TeSys LR97 - TeSys LT47 electronic over current relays

Dimensions

LR97 D●●●●

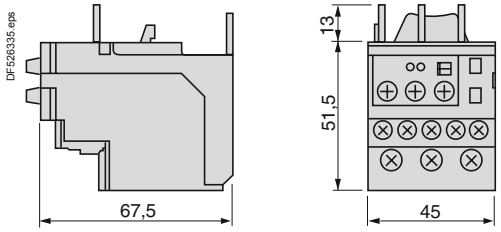

LT47 ●●●●

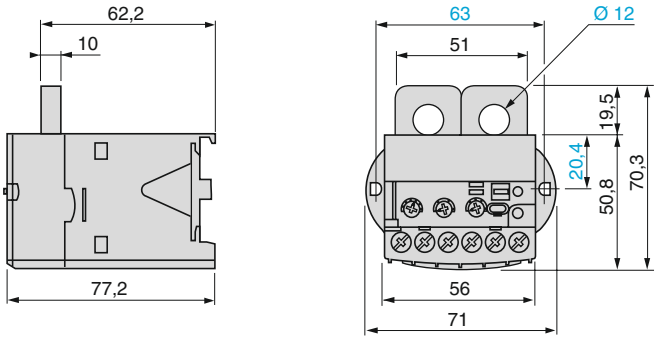

Mounting

LR97 D●●●●

Direct mounting beneath the contactor

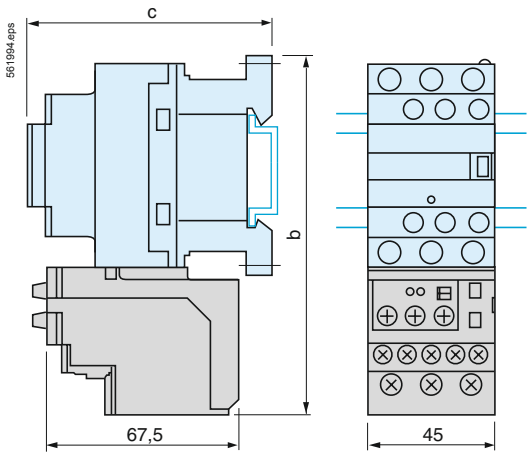

LC1	D09…D18	D25…D38
b	123	137
c	See pages B8/67 and B8/68	

LT47 ●●●●

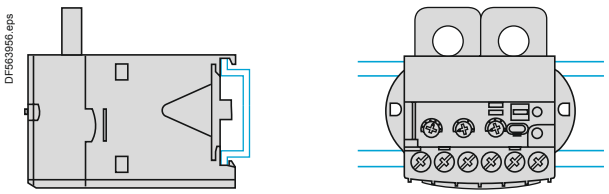

Note: Can be mounted on ⊔ rail.

Schemes

LR97 D●●●●

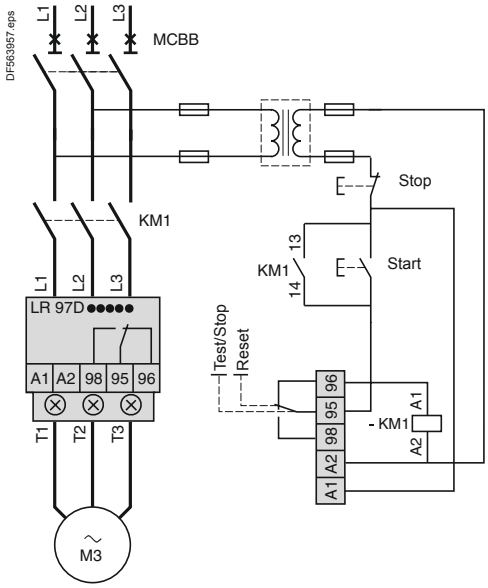

LT47 ●●●●

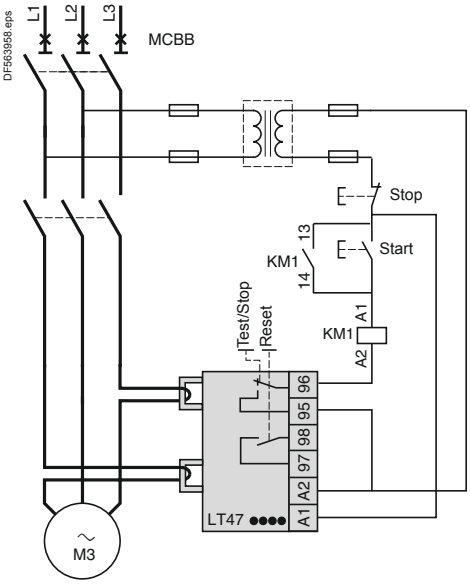

References:
page B11/19

Presentation, description:
page B11/58

Curves:
pages B11/59 and B11/60

Characteristics:
pages B11/60 and B11/61

Motor management systems

Chapter B12

Motor management system - TeSys U

Type of product	Range	Pages
Motor controller TeSys U		B12/2
Current transformers for TeSys U motor controller	From **30** to **800** A	B12/2
Type 2 coordination table for assemblies of: ■ circuit breaker + contactor + TeSys U controller + current transformer ■ fuses + contactor + TeSys U controller + current transformer		B12/3

Motor management system - TeSys T

Controllers with Modbus, or CANopen, Devicenet, Profibus, Ethernet TCP/IP communication port	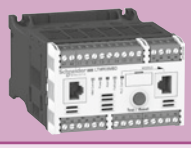	B12/4
Extension modules		B12/5
HMI terminal and cables		B12/5
Accessories		B12/6

Technical Data for Designers B12/9

Motor management system
TeSys U controllers

TeSys U

DF526120.tif

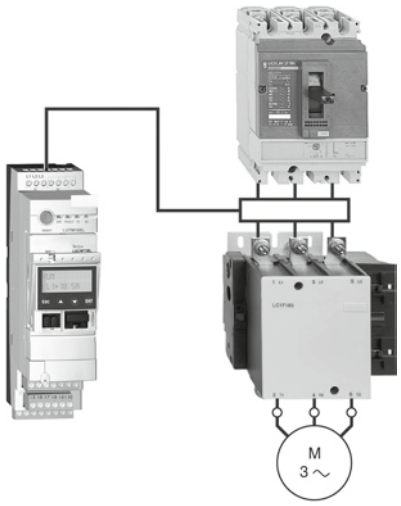

LUT M + LUCM T1BL + LUTC ●●

References

Control bases (auxiliary supply voltage ⎓ 24 V)

Connection		For use with contactor	Reference	Weight
Current transformers	Control			kg
Screws	Screws	LC1D●●	**LUTM10BL**	0.800
		LC1F●●●	**LUTM20BL**	0.800

Control units

Description	Class	For motor type	Setting range	Reference	Weight kg
Advanced	10	3-phase	0.35…1.05	**LUCBT1BL**	0.140
	20	3-phase	0.35…1.05	**LUCDT1BL**	0.140
Multifunction	5 to 30	3-phase	0.35…1.05	**LUCMT1BL**	0.175

Current transformers

Operating current		Reference	Weight
Primary	Secondary		kg
30	1	**LUTC0301**	0.550
50	1	**LUTC0501**	0.330
100	1	**LUTC1001**	0.450
200	1	**LUTC2001**	0.590
400	1	**LUTC4001**	0.870
800	1	**LUTC8001**	1.210

Function modules and communication modules

The TeSys U controller is compatible with the modules listed below:
- ■ Thermal overload alarm module LUF W10,
- ■ Motor load indication module LUF V2,
- ■ Communication modules:
- □ Modbus (LUL C033),
- □ CANopen (LULC08),
- □ DeviceNet (LULC09),
- □ Advantys STB (LUL C15).

Note: *Communication modules **LUL C07** (Profibus DP), **ASILUF C5** and **ASILUF C51** (AS-Interface) are not compatible with the TeSys U controller.*
*Module **LUF W10** is only compatible with control units **LUCB T1BL** and **LUCD T1BL**.*

Presentation: pages B12/10 and B12/11
Characteristics: pages B12/12 and B12/13
Dimensions, mounting: page B12/14
Schemes: page B12/15

Motor management system
TeSys U controllers

TeSys U

Combinations providing type 2 coordination

With Circuit breaker

Standard power ratings of 3-phase motors 50-60 Hz in category AC-3 400/415 V		Circuit breaker			Contactor	TeSys U controller	Current transformers
PkW	IeA	Reference	Rating A	Irm [1] A	Reference [2]	Reference	Reference
18.5	35	**GV3L40**	40	560	**LC1D50A**	**LUTM + LUC●**	**3 x LUTC0501**
22	41	**GV3L50**	50	700	**LC1D50A**	**LUTM + LUC●**	**3 x LUTC1001**
30	55	**GV3L65**	65	910	**LC1D65A**	**LUTM + LUC●**	**3 x LUTC1001**
37	66	**NSX80HMA**	80	1040	**LC1D80**	**LUTM + LUC●**	**3 x LUTC1001**
45	80	**NSX100HMA**	100	1300	**LC1D95**	**LUTM + LUC●**	**3 x LUTC1001**
55	97	**NSX160HMA**	150	1350	**LC1D115**	**LUTM + LUC●**	**3 x LUTC2001**
75	132	**NSX160HMA**	150	1800	**LC1D150**	**LUTM + LUC●**	**3 x LUTC2001**
90	160	**NSX250HMA**	220	2200	**LC1F185**	**LUTM + LUC●**	**3 x LUTC2001**
110	195	**NSX250HMA**	220	2640	**LC1F225**	**LUTM + LUC●**	**3 x LUTC4001**
132	230	**NSX400HMA**	320	3200	**LC1F265**	**LUTM + LUC●**	**3 x LUTC4001**
160	280	**NSX400HMA**	320	4160	**LC1F330**	**LUTM + LUC●**	**3 x LUTC4001**
200	350	**NSX630HMA**	500	5000	**LC1F400**	**LUTM + LUC●**	**3 x LUTC4001**
220	385	**NSX630HMA**	500	5500	**LC1F400**	**LUTM + LUC●**	**3 x LUTC4001**
250	430	**NSX630HMA**	500	6000	**LC1F500**	**LUTM + LUC●**	**3 x LUTC8001**

With fuses

Standard power ratings of 3-phase motors 50-60 Hz in category AC-3 400/415 V		Switch-disconnector fuse	aM fuses		Contactor	TeSys U controller	Current transformers
PkW	IeA	Reference	Size	Rating A	Reference [2]	Reference	Reference
18.5	35	**GS●F**	14 x 51	40	**LC1D40A**	**LUTM + LUC●**	**3 x LUTC0501**
22	41	**GS●J**	22 x 58	50	**LC1D50A**	**LUTM + LUC●**	**3 x LUTC1001**
30	55	**GS●J**	22 x 58	80	**LC1D80**	**LUTM + LUC●**	**3 x LUTC1001**
37	66	**GS●J**	22 x 58	100	**LC1D80**	**LUTM + LUC●**	**3 x LUTC1001**
45	80	**GS●J**	22 x 58	100	**LC1D95**	**LUTM + LUC●**	**3 x LUTC1001**
55	97	**GS●L**	T0	125	**LC1D115**	**LUTM + LUC●**	**3 x LUTC2001**
75	132	**GS●L**	T0	160	**LC1D150**	**LUTM + LUC●**	**3 x LUTC2001**
90	160	**GS●N**	T1	200	**LC1F185**	**LUTM + LUC●**	**3 x LUTC2001**
110	195	**GS●N**	T1	250	**LC1F225**	**LUTM + LUC●**	**3 x LUTC4001**
132	230	**GS●QQ**	T2	315	**LC1F265**	**LUTM + LUC●**	**3 x LUTC4001**
160	280	**GS●QQ**	T2	400	**LC1F330**	**LUTM + LUC●**	**3 x LUTC4001**
200	350	**GS2S**	T3	500	**LC1F400**	**LUTM + LUC●**	**3 x LUTC4001**
220	385	**GS2S**	T3	500	**LC1F400**	**LUTM + LUC●**	**3 x LUTC4001**
250	430	**GS2S**	T3	500	**LC1F500**	**LUTM + LUC●**	**3 x LUTC8001**
315	540	**GS2S**	T3	630	**LC1F630**	**LUTM + LUC●**	**3 x LUTC8001**

(1) Irm: setting current of the magnetic trip.
(2) For reversing operation, replace the prefix LC1 with LC2.

Motor controllers

Protection components
TeSys T Motor Management System

TeSys T

PF526387-47-M.eps

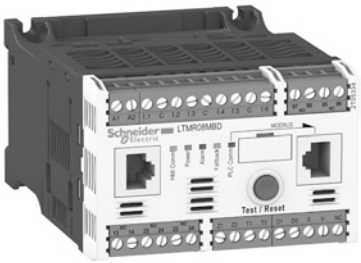

LTM R08MBD

PF526388-47-M.eps



LTM R08CBD

PF526389-47-M.eps

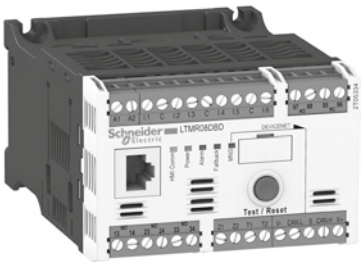

LTM R08DBD

PF526390-47-M.eps

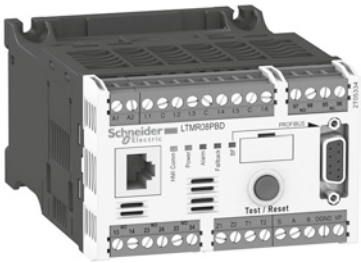

LTM R08PBD

CPB100750-00.eps



LTM R08EBD

Controllers

Setting range	Control voltage	Current range	Reference
A	V	A	
For Modbus			
8	⎓ 24	0.4...8	**LTMR08MBD**
	∿ 100...240	0.4...8	**LTMR08MFM**
27	⎓ 24	1.35...27	**LTMR27MBD**
	∿ 100...240	1.35...27	**LTMR27MFM**
100	⎓ 24	5...100	**LTMR100MBD**
	∿ 100...240	5...100	**LTMR100MFM**
For CANopen			
8	⎓ 24	0.4...8	**LTMR08CBD**
	∿ 100...240	0.4...8	**LTMR08CFM**
27	⎓ 24	1.35...27	**LTMR27CBD**
	∿ 100...240	1.35...27	**LTMR27CFM**
100	⎓ 24	5...100	**LTMR100CBD**
	∿ 100...240	5...100	**LTMR100CFM**
For DeviceNet			
8	⎓ 24	0.4...8	**LTMR08DBD**
	∿ 100...240	0.4...8	**LTMR08DFM**
27	⎓ 24	1.35...27	**LTMR27DBD**
	∿ 100...240	1.35...27	**LTMR27DFM**
100	⎓ 24	5...100	**LTMR100DBD**
	∿ 100...240	5...100	**LTMR100DFM**
For Profibus DP			
8	⎓ 24	0.4...8	**LTMR08PBD**
	∿ 100...240	0.4...8	**LTMR08PFM**
27	⎓ 24	1.35...27	**LTMR27PBD**
	∿ 100...240	1.35...27	**LTMR27PFM**
100	⎓ 24	5...100	**LTMR100PBD**
	∿ 100...240	5...100	**LTMR100PFM**
For Ethernet TCP/IP (communication protocols: Modbus/TCP and EtherNet/IP)			
8	⎓ 24	0.4...8	**LTMR08EBD**
	∿ 100...240	0.4...8	**LTMR08EFM**
27	⎓ 24	1.35...27	**LTMR27EBD**
	∿ 100...240	1.35...27	**LTMR27EFM**
100	⎓ 24	5...100	**LTMR100EBD**
	∿ 100...240	5...100	**LTMR100EFM**

Filter

Control voltage	Current max	Reference
V	mA	
∿ 150...240	130	**LTM9F**

Presentation: pages B12/16 to B12/26
Characteristics: pages B12/27 to B12/31
Dimensions, mounting: pages B12/32 to B12/33
Schemes: pages B12/34 to B12/37
Combination for customer assembly: pages B12/38 to B12/41

Protection components
TeSys T Motor Management System

TeSys T

PF526380-30-M.eps

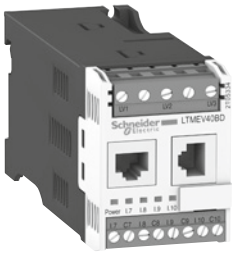

LTM EV40BD

PF568605-54-M.eps



LTM CU

Extension modules (with voltage measurement on the 3 phases)

Input control voltage	Number of inputs	Supply to the electronics	Reference
V			
⎓ 24	4	Via the controller	**LTMEV40BD**
∿ 100…240	4	Via the controller	**LTMEV40FM**

HMI terminals

Description		Supply Voltage	Reference
Operator control unit	Languages: English French Spanish	Supply via the controller	**LTMCU**
Operator control unit with Fast Device Replacement Service (FDR)	Languages: English French Spanish	Supply via the controller	**LTMCUF**
Kit for portable LTM CU			**LTM9KCU**
Magelis compact display.		⎓ 24 V external	**XBTN410**

Description	Number and type of connectors	Length m	Reference
Connecting cables for the LTM CU control unit	2 x RJ45	1	**LTM9CU10**
		3	**LTM9CU30**
Connecting cables for the XBT N410	SUB-D 25-way female RJ45	2.5	**XBTZ938**

Cables

Description	Number and type of connectors	Length m	Reference
Connecting cables For connecting the controller to the extension module	2 x RJ45	0.04	**LTMCC004** (1)
		0.3	**LTM9CEXP03**
		1	**LTM9CEXP10**

Replacement connectors

Description	Number and type of connectors	Reference
Complete set of connectors for controllers and extension modules	10 screw terminals (all network versions included)	**LTM9TCS**
Connector extraction tool		**LTM9TCT** (2)

(1) Sold in lots of 6.
(2) Sold in packs of 3.

Protection components
TeSys T Motor Management System

TeSys T

Configuration tools

Description	Composition	Reference	Weight kg
Connection cable for PC	USB to RJ45 cable, lenght 2.5 m	**TCSMCNAM3M002P**	0.200

Current transformers (1)

Operational current		Reference	Weight
Primary	Secondary		
A	A		kg
100	**1** (2)	**LT6CT1001**	0.550
200	**1** (2)	**LT6CT2001**	0.550
400	**1** (2)	**LT6CT4001**	0.550
800	**1** (2)	**LT6CT8001**	0.680

PF526393.eps



LT6 CT4001

Earth fault toroids (marketed under the Schneider Electric brand)

Rated operational current Ie	Internal Ø of toroid	Reference	Weight
A	mm		kg
Closed toroids, type A			
65	30	**50437**	0.120
85	50	**50438**	0.200
160	80	**50439**	0.420
250	120	**50440**	0.530
400	200	**50441**	1.320
630	300	**50442**	2.230
Split toroids, type OA			
85	46	**50485**	1.300
250	110	**50486**	3.200

PTC thermistor probes (3)

Description	Nominal Operating Temperature (NOT)	Colour	Unit reference (4)
	°C		
Triple probes	90	Green/green	**DA1TT090**
	110	Brown/brown	**DA1TT110**
	120	Grey/grey	**DA1TT120**
	130	Blue/blue	**DA1TT130**
	140	White/blue	**DA1TT140**
	150	Black/black	**DA1TT150**
	160	Blue/red	**DA1TT160**
	170	White/green	**DA1TT170**

PF510575.eps



DA1 TT●●●

(1) The transformers offered for use with TeSys U starters are suitable. Please consult our "TeSys U starter-controllers" catalogue.
(2) For use with LTM R08●● controllers.
(3) PTC: Positive Temperature Coefficient.
(4) Sold in lots of 10.

Marking accessories (to be ordered separately)

Description	Composition	Height	Unit reference	Weight
		mm		kg
Clip-in markers	Strips of 10 identical numbers (0 to 9) or capital letters (A to Z)	**5**	**NSYTRABF5●** (1)	0.002
		6	**NSYTRABF6●** (1)	0.002

Connection accessories

Description		Length	Reference	Weight
		m		kg
For Modbus connection				
Cables fitted with 2 x RJ45 connectors		0.3	**VW3A8306R03**	0.045
		1	**VW3A8306R10**	0.065
		3	**VW3A8306R30**	0.125
T-junctions		0.3	**VW3A8306TF03**	0.032
		1	**VW3A8306TF10**	0.032
RS 485 line terminator		–	**VW3A8306R**	0.012
For CANopen connection				
Cables		50	**TSXCANCA50**	4.930
		100	**TSXCANCA100**	8.800
		300	**TSXCANCA300**	24.560
IP20 connectors SUB-D 9-way female Line end adapter switch	Elbowed (90°)	–	**TSXCANKCDF90T**	0.046
	Straight	–	**TSXCANKCDF180T**	0.049
	Elbowed (90°) with SUB-D 9-way connector for connection to PC or diagnostic tool	–	**TSXCANKCDF90TP**	0.051
For DeviceNet connection				
Cables		50	**TSXCANCA50**	4.930
		100	**TSXCANCA100**	8.800
		300	**TSXCANCA300**	24.560
For Profibus DP connection (2)				
Cables		100	**TSXPBSCA100**	–
		400	**TSXPBSCA400**	–
Connectors	With line terminator	–	**490NAD91103**	–
	Without line terminator	–	**490NAD91104**	–
	With line terminator and terminal port	–	**490NAD91105**	–
For Ethernet TCP/IP connection				
Shielded twisted pair cables to standard EIA/TIA568				
Cables fitted with 2 x RJ45 connectors for connection to terminal equipment	Straight	2	**490NTW00002**	–
		5	**490NTW00005**	–
		12	**490NTW00012**	–
		40	**490NTW00040**	–
		80	**490NTW00080**	–
Shielded twisted pair cables, UL and CSA 22.1 approved				
Cables fitted with 2 x RJ45 connectors for connection to terminal equipment	Straight	2	**490NTW00002U**	–
		5	**490NTW00005U**	–
		12	**490NTW00012U**	–
		40	**490NTW00040U**	–
		80	**490NTW00080U**	–
Ethernet Connector	Elbowed 180°		**LTM9CE180T** (3)	0.180

(1) When ordering, replace the ● in the reference with the number or letter required.
(2) To order other connectors and cables (UL cables for harsh environments, etc.), please consult our Customer Care Centre.
(3) Sold in packs of 6.

Motor controllers

Presentation: pages B12/16 to B12/26 | Characteristics: pages B12/27 to B12/31 | Dimensions, mounting: pages B12/32 to B12/33 | Schemes: pages B12/34 to B12/37 | Combination for customer assembly: pages B12/38 to B12/41

TeSys U, T

Technical Data for Designers

Contents

TeSys U:

> presentation ..... B12/10 to B12/11
> characteristics ..... B12/12 and B12/13
> dimensions B12/14
> schemes B12/15

TeSys T:

> presentation ..... B12/16 to B12/26
> characteristics ..... B12/27 to B12/30
> curves B12/31
> dimensions ..... B12/32 to B12/33
> schemes ..... B12/34 to B12/37
> combinations ..... B12/38 to B12/41

TeSys motor starters - open version

TeSys U controllers

PF526119-22-M.tif



Presentation

Above 32 A, the TeSys U controller provides a motor starter management solution identical to that provided by TeSys U starter-controllers.

Used in conjunction with a short-circuit protection device and a contactor, it provides a motor starter whose functions are the same as those of a TeSys U starter-controller and, in particular, provides the following functions: overload protection, motor starter control and application monitoring.

It consists of a control unit whose adjustment range is compatible with the secondary of current transformers, plus a control base which also allows fitment of a function module or a communication module.

It requires a ⎓ 24 V external power supply.

The secondaries of current transformers, the ⎓ 24 V power supply, the 10 inputs and the 5 outputs are connected by screw terminal block.

520973.tif

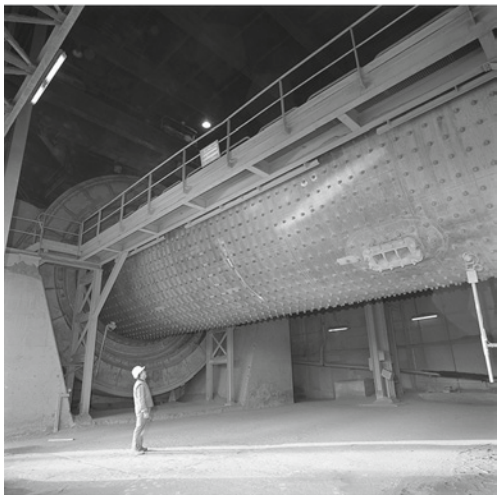

Application example

Detecting blockage of a rock crusher by monitoring the motor current.

Operating conditions

- Power: 90 kW at 400 V.
- In: 185 A.
- Duty class S1.
- Control circuit voltage: ∿ 230 V
- Control-command by PLC and serial link using the Modbus protocol.

Products used

Description	Item	Quantity	Reference	Page
Controller	1	1	**LUT M20BL**	6/64
Multifunction control unit	2	1	**LUCM T1BL**	6/64
Modbus communication module	3	1	**LUL C033**	1/95
Current transformer	4	3	**LUT C4001**	6/64
Contactor	5	1	**LC1 F185P7**	–
Circuit breaker	6	1	**NS 250HMA**	–

DF526121.tif

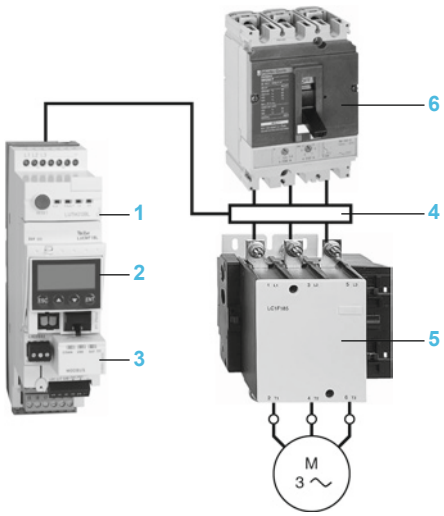

Functions performed

- Short-circuit protection with level of protection of 70 kA at 400V.
- Electronic protection against thermal overloads with an adjustment range of 4.
- Detection of crusher blockage by monitoring the induced overcurrent. To use the "overtorque or jam" function, the following parameters must be entered:
  - □ trip: the answer yes/no enables or disables the function,
  - □ time before tripping: the time period during which the value of the current must be above the tripping threshold in order to cause tripping (adjustable from 1 to 30 s).
  - □ tripping threshold: value as a % of the load current ratio in relation to the setting current. If the ratio remains above this threshold for the time specified in the previous parameter, the product trips (adjustable from 100 to 800 %).

It is possible to set the parameter for an alarm at a preset threshold under the same conditions as above.

Characteristics: pages B12/12 and B12/13 | References: page B12/2 | Dimensions, mounting: page B12/14 | Schemes: page B12/15

TeSys motor starters - open version
TeSys U controllers

Application example

Scheme

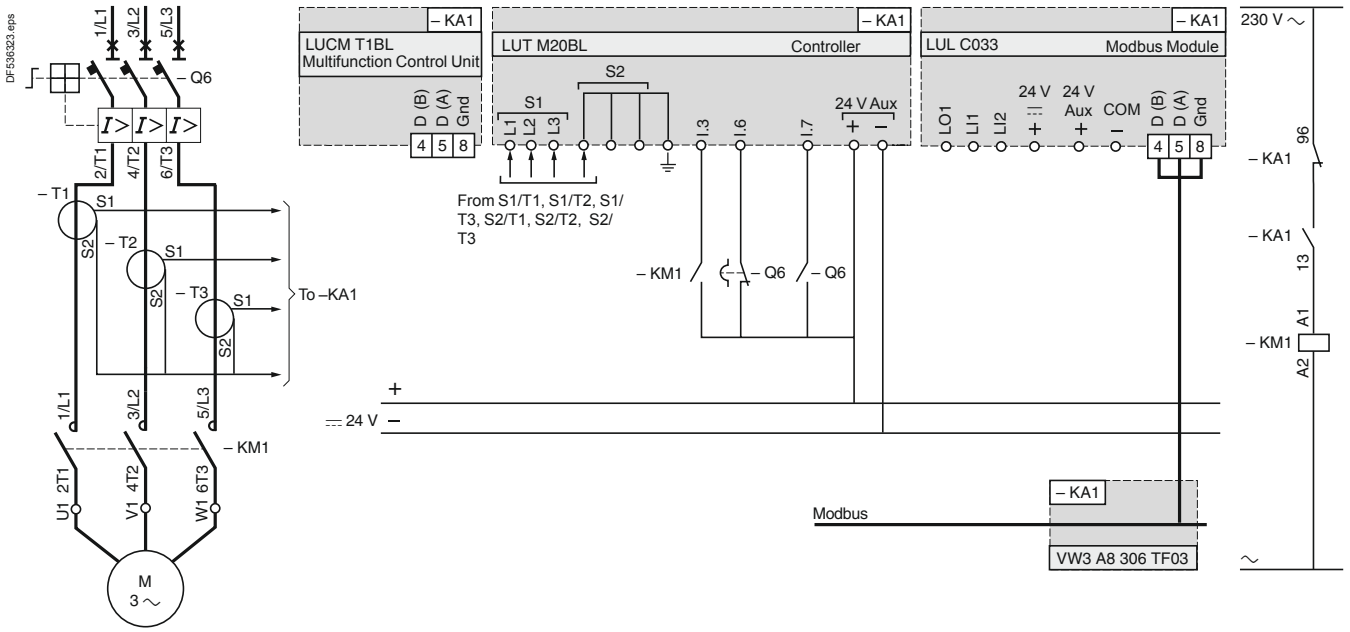

Other functions

The multifunction control unit incorporates other control and protection functions, such as: monitoring and control of phase current, alarm, …
Communication module LUL C033 also provides a programmable output and two programmable inputs.

Motor controllers

TeSys motor starters - open version
TeSys U controllers

Environment

Control base and control unit type			LUT M + LUCB T1BL or LUCD T1BL without LUL C	LUT M + LUCM T1BL or LUL C
Product certifications			UL, CSA, ASEFA	
Conforming to standards			IEC/EN 60947-4-1, UL 508, CSA C22-2 N°14	
Rated insulation voltage of the outputs (Ui)	Conforming to IEC/EN 60947-1, overvoltage category III, degree of pollution: 3	**V**	250	
	Conforming to UL508, CSA C22-2 n°14	**V**	250	
Rated impulse withstand voltage of the outputs (Uimp)	Conforming to IEC/EN 60947-4-1	**kV**	4	
Degree of protection Conforming to IEC/EN 60947-1 (protection against direct finger contact)	Front panel (outside connection zone)		IP 40	
	Front panel and wired terminals		IP 20	
	Other faces		IP 20	
Protective treatment	Conforming to IEC/EN 60068		"TH"	
	Conforming to IEC/EN 60068-2-30	**Cycles**	12	
	Conforming to IEC/EN 60068-2-11	**h**	48	
Ambient air temperature around the device	Storage	**°C**	- 40…+ 85	
	Operation	**°C**	- 25…+ 70	- 25…+ 60
Maximum operating altitude		**m**	2000	
Operating positions Without derating	In relation to normal vertical mounting plane		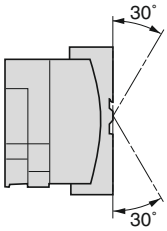 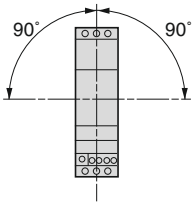	
Flame resistance	Conforming to UL 94		V2	
	Conforming to IEC/EN 60695-2-12	**°C**	960 (parts supporting live components)	
		°C	650	
Shock resistance 1/2 sine wave = 11 ms	Conforming to IEC/EN60068-2-27 (1)		15 gn	
Vibration resistance 5…300 Hz	Conforming to IEC/EN 60068-2-6 (1)		4 gn	
Resistance to electrostatic discharge	Conforming to IEC/EN 61000-4-2	**kV**	In open air: 8 - Level 3	
		kV	On contact: 6 - Level 3	
Resistance to radiated fields	Conforming to IEC/EN 61000-4-3	**V/m**	10 - Level 3	
Immunity to fast transient currents	Conforming to IEC/EN 61000-4-4	**kV**	CT outputs and inputs: 4 - Level 4	
		kV	Inputs and supply: 2 - Level 3	
Immunity to radioelectric fields	Conforming to IEC/EN 61000-4-6	**V**	10	

Control base and control unit relays

			Common mode	Serial mode
Immunity to dissipated shock waves	Conforming to IEC/EN 60947-4-1			
	Output relays / power line	**kV**	4	2
	Inputs	**kV**	2	1
	Serial communication	**kV**	2	–

(1) Without modifying the contact states, in the most unfavourable direction.

Presentation: pages B12/10 and B12/11 | References: page B12/2 | Dimensions, mounting: page B12/14 | Schemes: page B12/15

TeSys motor starters - open version
TeSys U controllers

TeSys U

Control circuit supply characteristics

Operational voltage		**V**	⎓ 20.4…28.8
Power consumption		**W**	2 max
Associated protection		**A**	gG fuse. 0.5
Cabling			
Connectors	Pitch	**mm**	5
Flexible cable without cable end	1 conductor	**mm²**	0.2…2.5
	2 identical conductors	**mm²**	0.2…1.5
Flexible cable with cable end			
Without insulated ferrule	1 conductor	**mm²**	0.25…2.5
	2 identical conductors	**mm²**	0.25…1
With insulated ferrule	1 conductor	**mm²**	0.25…2.5
	2 identical conductors (1)	**mm²**	0.5…1.5
Solid cable without cable end	1 conductor	**mm²**	0.2…2.5
	2 identical conductors	**mm²**	0.2…1
Conductor size	1 conductor		AWG 24 to AWG 12
Tightening torque		**N.m**	0.5…0.6
Flat screwdriver		**mm**	3

Input characteristics

Operational voltage	**V**	⎓ 24
Logic inputs		Logic state 1: I ⩾ 6 mA - 16 V Logic state 0: I ⩽ 1.5 mA - 5 V

Discrete output characteristics

Base controller type			**LUT M10BL**	**LUT M20BL**
Type			Single break volt-free contacts	
Load	a.c. supply		C 300	B 300
	d.c. supply		24 V/5 A	24 V/5 A
Permissible power in cat. AC-15	For 500 000 operating cycles	**VA**	180	500
Permissible power in cat. DC-13	For 500 000 operating cycles	**W**	30	30
Associated protection		**A**	gG fuse, 4	gG fuse, 4
Used with contactor type (2)			Control voltage ⎓ 24 V: LP1K, LC1 D09…D95. Control voltage ∿ 24…240 V: LC1K, LC1D.	Control voltage ∿ 100…240 V: LC1K, LC1D, LC1 F185…F500

Characteristics of external current transformers LUT C●●●1

Precision		Class 5P					
Precision limit factor		10					
Maximum operating temperature	**°C**	70					
Transformer ratio		30/1	50/1	100/1	200/1	400/1	800/1
Diameter of conductor passage hole	**mm**	28	22	35	32	–	–
Maximum wire c.s.a.	**mm²**	30 x 10	30 x 10	40 x 10	65 x 32	38 x 127	53 x 127

(1) Use a double cable end.
(2) For other combinations, use an intermediate relay between the output of controller LUTM and the contactor coil.

Motor controllers

TeSys motor starters - open version

TeSys U controllers

Dimensions, mounting

Controllers

LUTM ●0BL

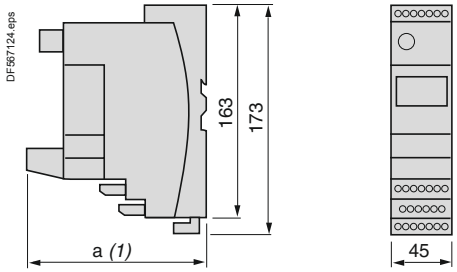

Rail mounting

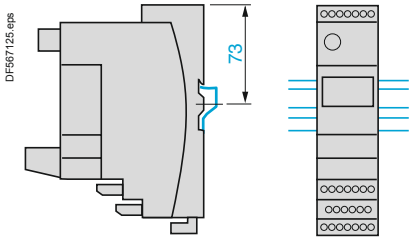

Rail mounting

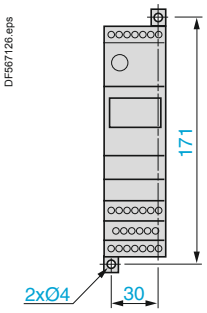

	a
With Modbus module	135
With Advantys STB, CANopen or DeviceNet modules	147

(1) Depth with communication module.

Current transformers

LUTC 0301…1001

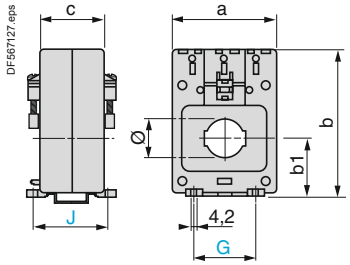

LUTC 2001…8001

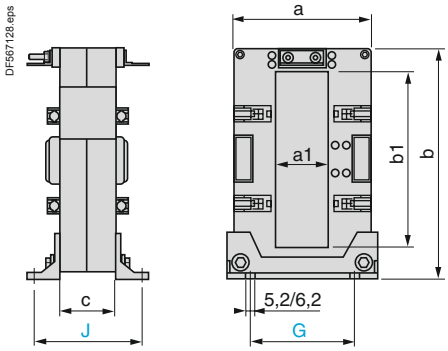

LUTC	a	b	b1	c	Ø	G	J
0301	78	108	42	46	28	45	54
0501	57	86	31	42	23	45	50
1001	78	108	42	46	35	45	54

LUTC	a	a1	b	b1	c	G	J
2001	94	32	99	55	40	68	52
4001	99	38	170	127	40	75	64
8001	125	54	170	127	40	95	67

TeSys motor starters - open version
TeSys U controllers

Schemes

Reversing controller LUT M

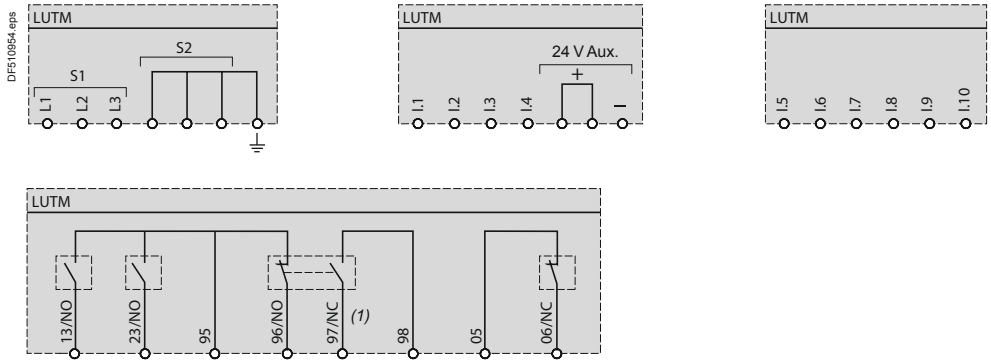

3-wire control, pulsed start with maintaining contact

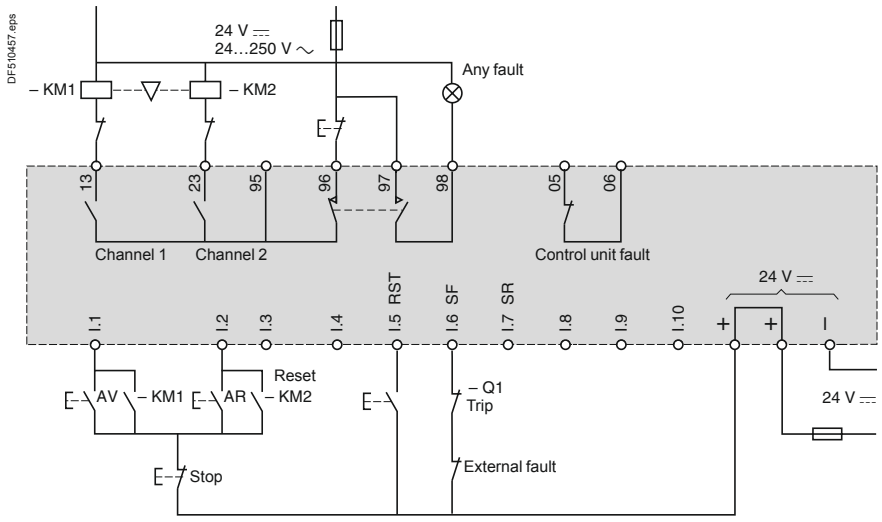

Control for Modbus communication module LUL C033

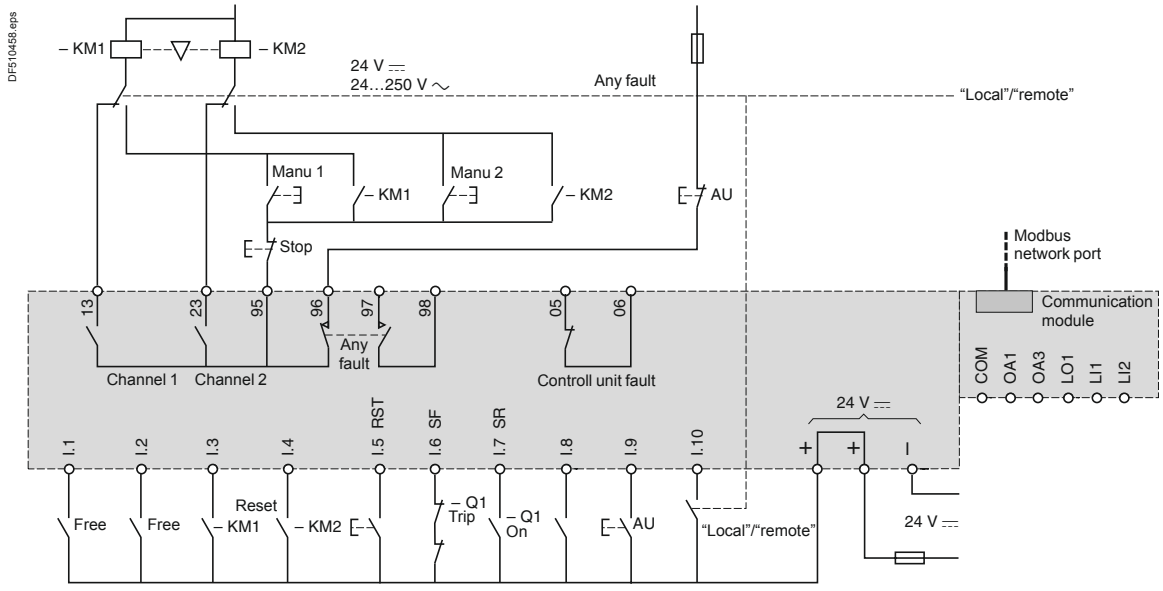

(1) The contacts are represented with controller powered up and not in a fault condition.

Presentation: pages B12/10 and B12/11
Characteristics: pages B12/12 and B12/13
References: page B12/2
Dimensions, mounting: page B12/14

Protection components
TeSys T Motor Management System

TeSys T

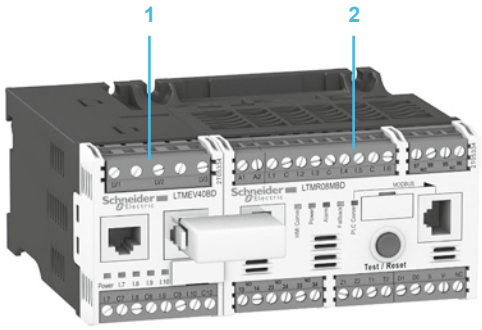

PF526378-63-M.eps

1 LTM EV40BD extension module
2 LTM R08MBD controller

Presentation

TeSys T is a motor management system that provides protection, metering and monitoring functions for single-phase and 3-phase, constant speed, a.c. motors up to 810 A.

Suitable for the harshest applications, this product range offers:
- high-performance multifunction protection, independent of the automation system
- a local HMI control unit for reading, displaying and modifying the parameters monitored, diagnostics, etc.
- configuration using SoMove software
- connection to the automation system via a communication network (selection according to various protocols).

The TeSys T motor management system is used for motor control and protection in harsh industrial applications, in which downtime must be avoided because it is very costly: Oil & Gas, chemical industry, water treatment, metal, minerals and mining, pharmaceutical industry, microelectronics, tunnels, airports etc.

With TeSys T, unexpected stops of a process or manufacturing, associated with a motor, are anticipated via predictive analysis of fault situations. Fault tripping is therefore reduced to a minimum.

Its use in motor control panels makes it possible to:
- increase the operational availability of installations
- improve flexibility from project design through to implementation
- increase productivity by making available all information needed to run the system.

The TeSys motor management system integrates perfectly with Schneider Electric low voltage equipment, such as Okken, Blokset and Prisma.

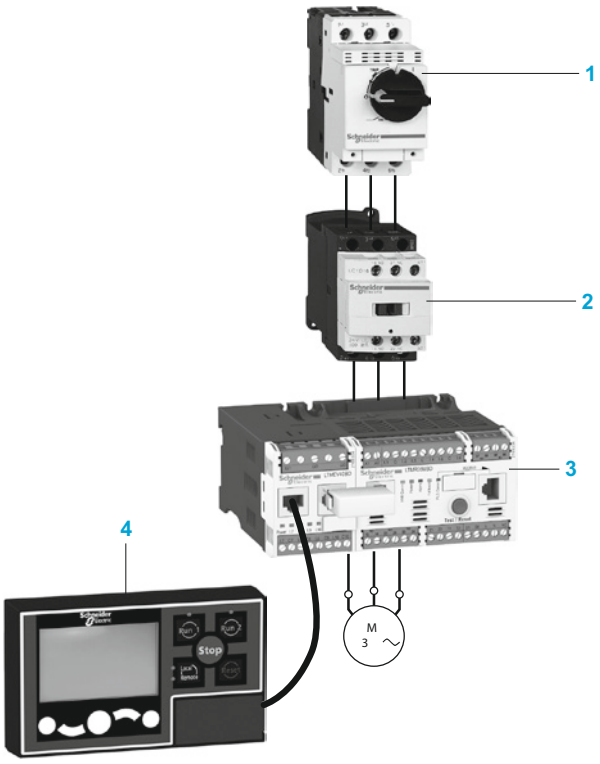

DF526392.eps

1 Magnetic Circuit breaker
2 Contactor
3 Controller with extension module
4 Operator control unit

Protection components
TeSys T Motor Management System

TeSys T

PF526379-47-M.eps

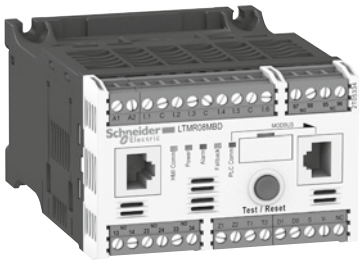

LTM R08MBD

PF526380-30-M.eps

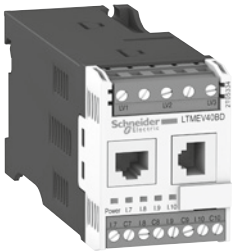

LTM EV40BD

PF568605-44-M.eps



LTM CU

Presentation

Composition of the motor management system

The system comprises:
- ■ an LTM R motor management controller
  - □ with internal current transformer up to 100 A
  - □ above 100 A, by external current transformer up to 810 A
- ■ an LTM E extension module
- ■ an LTM CU operator control unit
- ■ configuration software incorporated in the SoMove software application
- ■ accessories for system set-up.

Communication

The LTM R controller is equipped with a communication interface to allow remote monitoring and control of the motor. All motor information is then available at automation system level.

The following networks are available:
- ■ Modbus, CANopen, DeviceNet, ProfiBus DP and Ethernet TCP/IP (with two communication protocols, Modbus/TCP and EtherNet/IP).

TeSys T system functions

Protection functions:
- ■ against thermal overload
- ■ against phase imbalance and phase failure
- ■ thermal motor protection via PTC probes
- ■ against phase reversal
- ■ against earth faults
- ■ against long starting times and motor stalling
- ■ against automatic load shedding and restarting
- ■ against load fluctuations (I, U, P)
- ■ against variations of Cos φ (power factor).

Metering functions
- ■ Measurements (rms values):
  - □ current on the 3 phases
  - □ voltage on the 3 phases (shedding)
  - □ motor temperature
  - □ earth fault.
- ■ Values calculated:
  - □ average current
  - □ frequency
  - □ Cos φ (power factor), power, power consumption...

Motor control functions

A motor managed by TeSys T can be controlled:
- ■ locally, using the logic inputs present on the product, or via the HMI terminal
- ■ remotely, via the network (connection by terminal block or connector except for DeviceNet: terminal block only).

Motor control modes

5 predefined motor control modes are incorporated in the controller:
- ■ overload mode: monitoring of motors whose control is not managed by the controller,
- ■ independent mode: starting of non-reversing motors,
- ■ reverser mode: starting of reversing motors,
- ■ 2-step mode: 2-step starting of motors (star-delta, by autotransformer and by resistor),
- ■ 2-speed mode: 2-speed starting of motors (Dahlander, pole changer).

A 6th "Custom" mode is available to allow the user to create a specific motor control mode that is not predefined in the controller.

Statistical and diagnostic functions
- ■ Fault statistics: counters per type of protection and history of the last 5 faults.
- ■ Motor statistics: saving of motor statistics values.
- ■ Diagnosis of faults affecting correct operation of the product.

Protection components
TeSys T Motor Management System

TeSys T

PF526381-44-M.eps

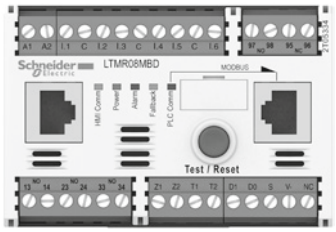

LTM R●●

The LTM R controller

The controller is the central component in the motor management system.
It manages the basic functions such as:
- measurement of 3-phase current via integral current transformers from 0.4 to 100 A (up to 810 A by external current transformers)
- measurement of earth current by external earth fault toroid
- measurement of motor temperature by PTC probe
- inputs and outputs for the various motor control modes, fault management and associated functions.

Characteristics

Supply

2 types of controller power supply are available:
- 24 V⎓
- 100…240 V∿.

Current ranges

3 current ranges allow measurement of motor current from 0.4 to 100 A:
- 0.4…8 A
- 1.35…27 A
- 5…100 A.

For use with external current transformers, choose the 0.4…8 A range (1 or 5 A current transformer secondary).

Inputs
- 6 discrete logic inputs.

Outputs
- 3 relay logic outputs (1N/O).
- 1 relay output for fault signalling (1N/O + 1N/C).

Measurements
- Connections for a temperature probe.
- Connections for an earth fault toroid.

LTM E extension module

The extension module adds the following functionalities to the TeSys T controller:
- voltage measurement on the 3 phases. This enables it to calculate numerous engine monitoring parameters (power, frequency, Cos φ …)
- 4 additional inputs.

Characteristics

Inputs
- 4 discrete logic inputs (independent).

Power supplies
- 2 types of power supply for the inputs: 24 V⎓ and 100…240 V∿.
  - A 24 V⎓ expansion module can be assembled with a 24 V⎓ controller or with a 100…240 V∿ controller.
  - A 100…240 V∿ expansion module can be assembled with a 100…240 V∿ controller.

Voltage measurement between phases up to 690 V nominal.

Protection components
TeSys T Motor Management System

TeSys T

568606-M.eps

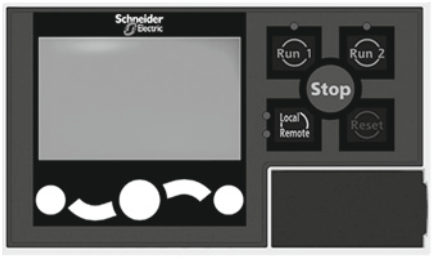

LTM CU

Human/Machine Interfaces (HMI)

Depending on the application, 2 types of HMI can be used with the LTM R controller.
- ■ The LTM CU operator control unit:
- □ entirely dedicated to the TeSys T range
- □ only for control/monitoring of an LTM R controller.
- ■ A Magelis XBT N410 terminal for control/monitoring of 1 to 8 LTM R controllers.

Dedicated exclusively to TeSys T controllers, control unit LTM CU makes it possible to:
- ■ configure the parameters of the LTM R controller
- ■ display information on controller configuration and operation
- ■ monitor the alarms and faults generated by the controller
- ■ local control of the motor via the local control interface (keys can be customised).

Three different languages can be loaded into the LTM CU controller at the same time.
By default, these 3 languages are:
- ■ LTM CU: English, French and Spanish

Note: *English is the only compulsory language.*

A language download utility (LangTool), together with all the other languages, are available on the website “www.schneider-electric.com”.
This tool allows the languages present in the LTM CU control unit to be adapted.

The LTM CU HMI control unit has an RJ45 port, protected by a flexible cover to provide a good level of protection (IP54).
This port on the front panel allows connection to a PC, via a connecting cable, in order to use SoMove software.
In this case, the control unit acts as a transmitter and all information can then be viewed in SoMove.
The LTMCU HMI can be used as a portable version by using the separate kit LTM9KCU. This kit consists of two snap-on plastic shells (tool-free mounting) fitted with a simple fixing system that uses magnets for mounting on all types of metal surfaces.

Two applications have been predefined for TeSys T. Depending on the application loaded, the HMI terminal makes it possible to:
- ■ configure and monitor a motor starter (LTM_1T1_V1.dop)
- ■ monitor and modify certain parameters on up to 8 motor starters (LTM_1T8_X_V1.dop) (1).

XBT L1000 programming software is needed for loading applications into the HMI terminal.
These applications are available on the website “www.schneider-electric.com”.

(1) Replace the X with an E for the English version, or an F for the French version.

Protection components
TeSys T Motor Management System

TeSys T

LTM R controllers

Modbus

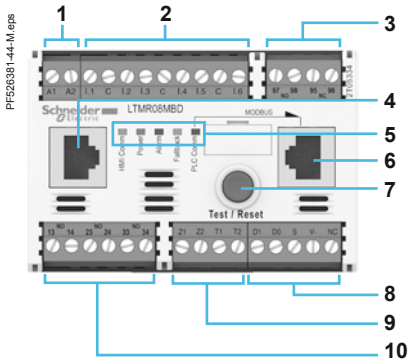

DeviceNet

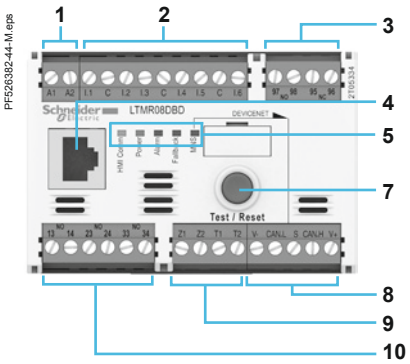

Profibus DP

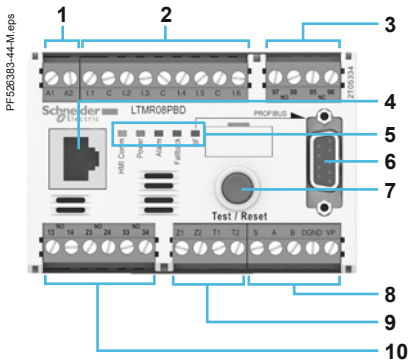

CANopen

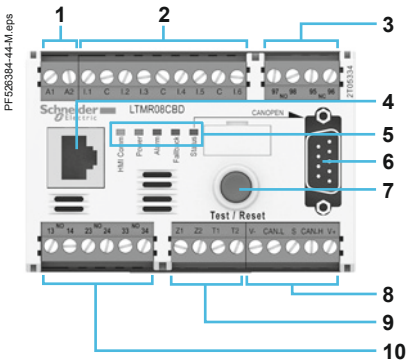

Ethernet TCP/IP (communication protocols: Modbus/TCP and EtherNet/IP)

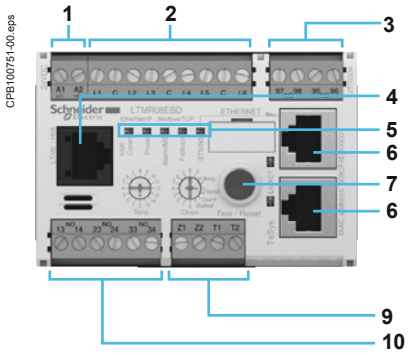

Controllers feature the following on their front panel:

1 Controller power supply.
2 Input connections.
3 Fault outputs (N/O+N/C).
4 Port for connection to the HMI terminal, a PC or an extension module (RJ45).
5 Controller status LEDs.
6 Network port for connection to the network by connector (except DeviceNet) (1).
7 Test/Reset button.
8 Connection to the network by terminal block (except Ethernet TCP/IP).
9 Connection for an earth fault toroid and temperature probes.
10 Outputs for motor control mode function.

(1) Connection using power extension (daisy-chaining) is possible for Ethernet TCP/IP.

LTM EV40●● extension modules

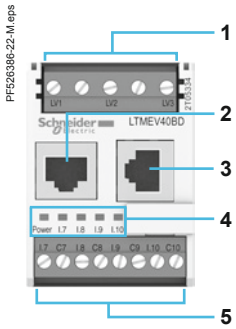

Extension modules have the following on their front face:
1 Inputs for voltage measurement.
2 Port for connection to the HMI terminal or to the PC.
3 Port for connection to the controller.
4 Extension module status LEDs.
5 Connection of additional inputs.

LTM CU operator control unit

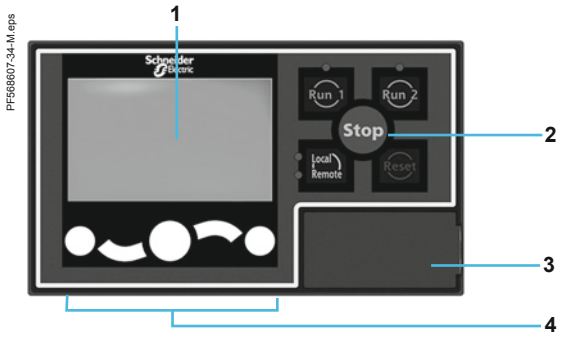

The control unit has the following on its front face:
1 Screen LCD display.
2 Local control interface including control keys and LEDs.
3 RJ45 port on front panel for connection to a PC (protected by a cover).
4 Contextual navigation keys.

Presentation: pages B12/16 to B12/26
Characteristics: pages B12/27 to B12/31
Dimensions, mounting: pages B12/32 to B12/33
Schemes: pages B12/34 to B12/37
Combination for customer assembly: pages B12/38 to B12/41

Protection components
TeSys T Motor Management System

TeSys T

Thermal and current protection functions

Functions Description	Setting range	Controller LTM R	Controller and extension module (LTM R + LTM E)	Alarm threshold	Fault threshold
Thermal overload: thermal protection of motor by monitoring current consumption	Class: 5, 10, 15, 20, 25, 30. Inverse ther/definite time	■	■	■	■
Motor temperature: thermal monitoring of the motor using temperature probes (winding, paper...). Up to 3 sensors in series.	PTC binary PTC/NTC analogue: 20 …6500 Ohm	■	■	■	■
Phase imbalance: monitors the symmetry of currents. To be used for imbalance < 80 % of the average current (1).	10…70% I average 0.2…20 s	■	■	■	■
Phase failure: monitors the symmetry of currents. To be used for imbalance < 80 % of the average current (1).	0.1…30 s	■	■	■	■
Phase reversal: signals when the phase sequence is different from the defined sequence (motor running).	A-B-C A-C-B	■	■	■	■
Long starting time: monitors the motor starting time	100…800 % of FLC (2) 1…200 s	■	■	■	■
Locked rotor: locking detected by a sudden increase in current after the start phase	100…800 % of FLC (2) 1…30 s	■	■	■	■
Min/max current load limit variations: monitors motor load through variations of current around preset thresholds.	min.: 30…100 % of FLC (2) 1…200 s max.: 20…800 % of FLC (2) 1…250 s	■	■	■	■
Earth fault: signals internal insulation faults, by vectorial summing of external currents, via earth fault toroid.	internal: 50…500 % min FLC (2) 0.5…25 s external: 0.02…10 A 0.1…25 s	■	■	■	■
Frequent starting: Protects the motor against overheating due to frequent starting.	0…999.9 s	■	■		

Voltage and power protection functions

Phase imbalance: monitors the symmetry of voltage between phases. To be used for imbalance < 40 % of the average voltage (3).	3…15 % 0.2…20 s		■	■	■
Phase failure: monitors the symmetry of voltage between phases. To be used for imbalance > 40 % of the average voltage (3).	0.1…30 s		■	■	■
Phase reversal: signals when the phase sequence is different from the defined sequence (motor stopped).	A-B-C A-C-B		■		■
Voltage variations. Min/max voltage limits: monitors voltage variations around preset thresholds.	min.: 70…99 % 0.2…25 s max.: 101…115 % 0.2…25 s		■	■	■
Load shedding: opens outputs O.1 and O.2 if voltage drops below a preset threshold.	68…115 % 1…9999 s		■		
Power variations. Min/max power limits: monitors power variations around preset thresholds.	20…800 % 1…100 s		■	■	■
Variations of Cos φ. Min/max limits of Cos φ: monitors variations of Cos φ around preset thresholds.	0…1 s 1…25 s		■	■	■

■ Function performed.

(1) Average current value measured on the 3 phases.
(2) FLC: Full Load Current (setting current).
(3) Average voltage value measured on the 3 phases.

Motor controllers

Protection components
TeSys T Motor Management System

TeSys T

Motor control functions

Functions	Description	With controller LTM R	With controller LTM R and extension module LTM E
Control modes	Local, via terminal block	X	X
	Local, via HMI terminal (1)	X	X
	Remote, via network	X	X
Operating modes	Overload	X	X
	Independent	X	X
	Reverser	X	X
	2-step	X	X
	2-speed	X	X
	"Custom" mode	X	X
Fault management	Manual reset	X	X
	Automatic reset	X	X
	Remote reset	X	X

Metering functions and statistics

Functions	Description	Measurement range	With controller LTM R	With controller LTM R and extension module LTM E
Measurements (2)	Current/Phase	0.08…1000 A	X	X
	Earth current	0.1633 x CT ratio	X	X
	Average current	0.08…1000 A	X	X
	Current imbalance between phases	0…200 %	X	X
	Thermal capacity level	0…200 %	X	X
	Motor temperature rise	0…6500 Ohm	X	X
	Frequency	0… 100 Hz		X
	Voltage between phases	∼ 0…830 V		X
	Voltage imbalance between phases	0…200 %		X
	Active power	0…6553.5 kW		X
	Reactive power	0…6553.5 kWr		X
	Cos φ (power factor)	0…100		X
	Active power consumption	0…400 kWh		X
	Reactive power consumption	0…400 kWrh		X
Fault statistics	Protection fault counters		X	X
	Protection alarm counters		X	X
	Diagnostic fault counters		X	X
	Motor control function counters		X	X
	Fault history		X	X
Fault diagnostics	Internal watchdog fault		X	X
	Controller internal temperature		X	X
	Temperature sensor connection		X	X
	Current connection		X	X
	Voltage connection			X
	Motor control commands (start, stop, run check back and stop check back)		X	X
	Control configuration checksum		X	X
	Loss of communication		X	X
Motor statistics	Number of motor control commands (O.1/O.2 starts)		X	X
	Operating time		X	X
	Number of starts/hour		X	X
	Last start I max.		X	X
	Duration of last start		X	X
Thermal overload statistics	Time to trip		X	X
	Time to restart		X	X
System operating statistics	Run, ON, Start, alarm, fault.		X	X

(1) HMI: Human Machine Interface.
(2) See measurement details page B12/28.

Protection components
TeSys T Motor Management System

TeSys T

DF525872.eps

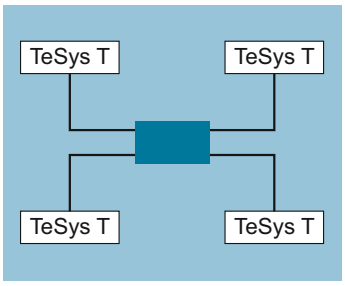

Star topology

DF529878.eps

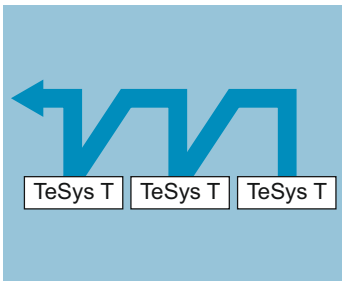

Daisy chain topology

Star topology

In a star topology, all the peripherals are linked via an intermediate peripheral (hub or switch).

In industrial Ethernet applications, the use of full duplex switches (instead of hubs) as central peripherals is strongly recommended.

Daisy chain topology

Daisy chaining, at bus level, is another connection topology commonly used in industrial automation system networks. The cable segments link several peripherals to each other, constituting the peripheral "section" of the network cable.

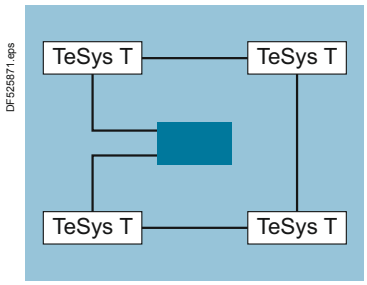

Ring topology

Ethernet: different network topologies

Ring topology

In a ring topology, all the peripherals or components of the network infrastructure are connected within a loop.
This type of topology makes it possible to achieve different levels of redundancy of the network.

Ethernet ring

Ethernet rings are generally the main networks in applications where a high level of reliability is required. If a ring topology is required, the switches handling this function must be used.

Redundancy

Redundancy of the network infrastructure is the key to development of applications with high operational reliability.
Implementing a single or double ring architecture makes it possible to provide protection against breaks in network segments.

Single ring

The first level of redundancy can be achieved by installing a single ring.
ConneXium switches can be used to establish main network ring configurations.
The ring is created using RSTP protocol.
If a section of the line fails, the ring structure converts into a line type configuration.

Ethernet: different communication protocols

LTM R controllers communicating over an Ethernet network can communicate either using the Modbus/TCP communication protocol or using the EtherNet/IP communication protocol. Both protocols are loaded in the controller. One must be selected for the operation.

Note: *EtherNet/IP communication protocol is supported by ODVA, also promoter of DeviceNet communication solution. Note that in EtherNet/IP, IP stands for Industrial Protocol.*

■ IP address Class for Ethernet TCP/IP version: Class A 20 ETH10/100.

Services available on Ethernet TCP/IP version		
	In Modbus/TCP	In Ethernet/IP
Web Server	■	■
Modbus messaging	■	
IO Messaging		■
Explicit Messaging		■
Client FDR	■	■
SNMP network administrator	■	■
RSTP	■	■
Discovery	■	■
Master IP	■	■
Broadcast Storm Protection	■	■

Protection components
TeSys T Motor Management System

Possible configurations and applications

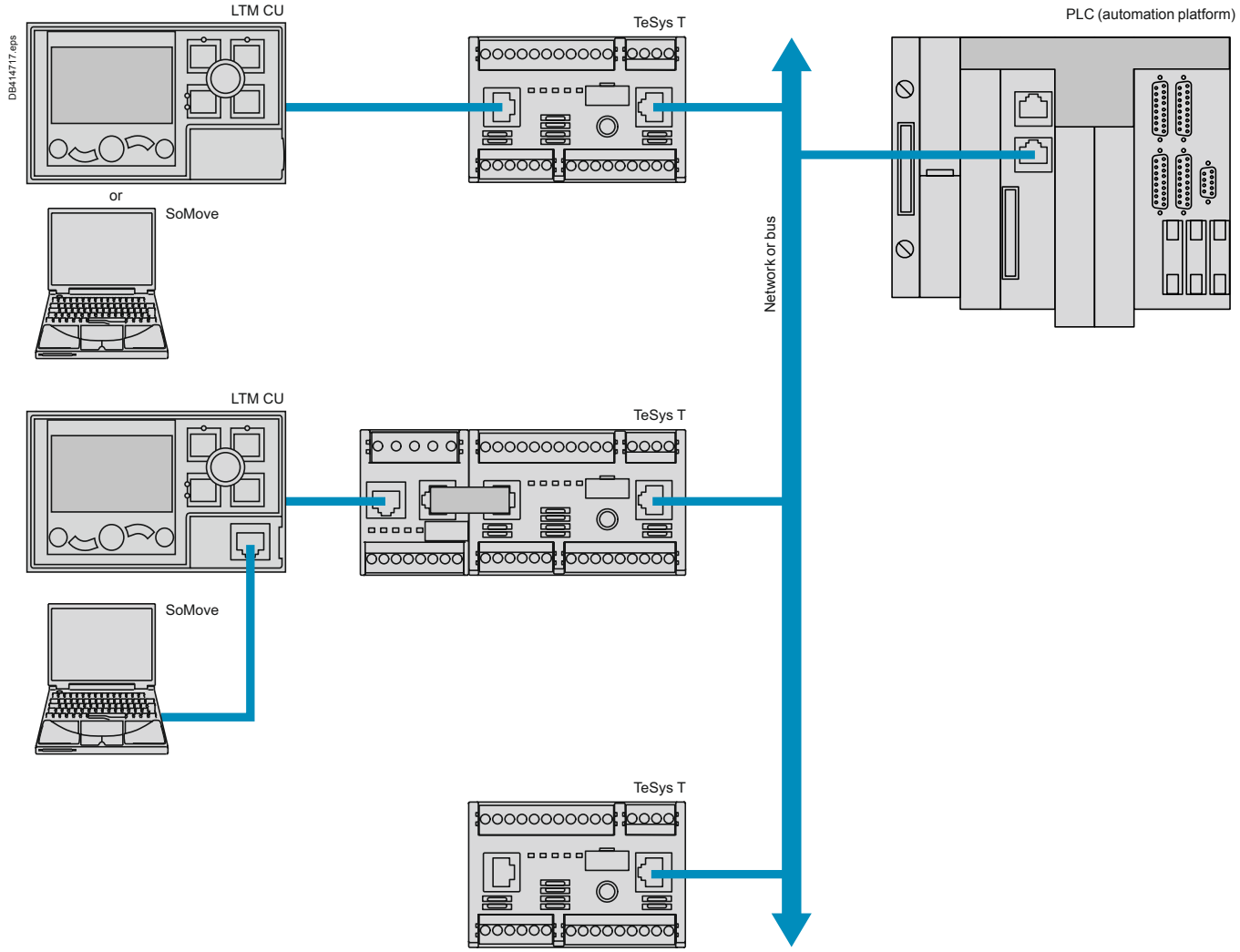

Protection components
TeSys T Motor Management System

PB113436.eps

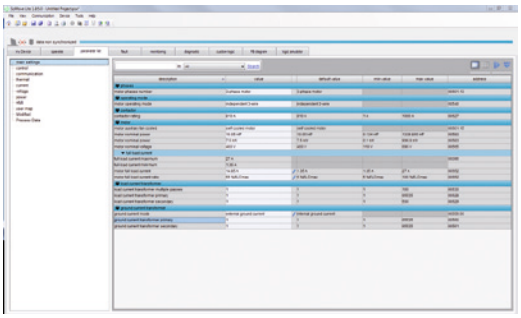

Example of TeSys T configurator setup screen

Configuration with SoMove

The TeSys T configurator is incorporated in the SoMove software application, as from version 2.5. (1)
It allows configuration, commissioning and maintenance of motor starters protected by TeSys T.

A library containing predefined motor control mode functions is available in order to:
- allow standardisation
- avoid errors
- reduce motor starter setup times.

5 predefined motor control modes are incorporated in the controller:
- overload mode: monitoring of motors whose control is not managed by the controller
- independent mode: starting of non-reversing motors
- reverser mode: starting of reversing motors
- 2-step mode: 2-step starting of motors (star-delta, by autotransformer and by resistor)
- 2-speed mode: 2-speed starting of motors (Dahlander, pole changer).

By using logic functions, a "Custom" mode makes it possible to:
- easily adapt these predefined motor control mode functions to the specific needs of your applications
- create a link with the motor starter environment or
- create new functions.

The functions thus defined can be saved and used to build your function library for future applications.
To create special functions, a logic editor is incorporated in the configurator and allows a choice of 2 programming languages:
- function block
- structured text.

(1) An update file is available, free of charge, on the website "www.schneider-electric.com". It will enable you to take advantage of the latest functions in the TeSys T motor management system.

Protection components
TeSys T Motor Management System

TeSys T

Environment

Product type			LTM R controllers		LTM EV40●● extension modules	
Conforming to standards			IEC/EN 60947-4-1, UL60947-4-1A, CSA 22-2 n°60947-4-1, IACS E10			
Product certifications			UL, CSA, CE, CCC, EAC/GOST, RCM/CTIC'K, Atex, Marine (BV, LROS, DNV, RINA, ABS) (1)			
Rated insulation voltage of the outputs (Ui)	Conforming to IEC/EN 60947-1, overvoltage category III, degree of pollution 3	V	690			
	Conforming to UL 508, CSA C222 n° 14	V	690			
Rated impulse withstand voltage (Uimp)	Conforming to IEC/EN 60947-4-1					
	∿ 100…240 V supply, inputs and outputs	kV	4		4	
	⎓ 24 V supply, inputs and outputs	kV	0.8		0.8	
	Communication circuits	kV	0.8		–	
	Current or voltage measurement circuit	kV	6		6	
Short-circuit withstand	Conforming to IEC/EN 60947-4-1	kA	100			
Protective treatment	Conforming to IEC/EN 60068		"TH"			
	Conforming to IEC/EN 60068-2-30		12 x 24 hour cycles			
	Conforming to IEC/EN 60070-2-11	h	48			
Ambient air temperature around the device	Storage	°C	- 40…+80			
	Operation	°C	- 20…+60			
Operating position without dating	In relation to normal vertical mounting plane		±30° in relation to mounting plate, ±90° 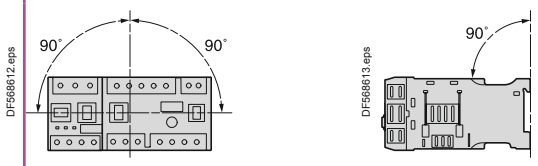			
Flame resistance	Conforming to UL 94	°C	960 (for parts supporting live components)			
	Conforming to IEC/EN 60695-2-12	°C	650 (for other parts)			
Shock resistance (1/2 sine wave, 11 ms)	Conforming to IEC/EN 60068-2-27 (2)		15 gn			
Vibration resistance	Conforming to IEC/EN 60068-2-6 (2) 5…300 Hz		4 gn (plate mounted) 1 gn (mounted on ⊥ rail)			
Resistance to electrostatic discharge	Conforming to IEC/EN 61000-4-2	kV	In open air: 8 - Level 3 On contact: 6 - Level 3			
Immunity to radiated electromagnetic interference	Conforming to IEC 61000-4-3	V/m	10 - Level 3			
Immunity to fast transient bursts	Conforming to IEC 61000-4-4	kV	On supply and relay outputs: 4 - Level 4 Other circuits: 2 - Level 3			
Immunity to radioelectric fields (3)	Conforming to IEC/EN 61000-4-6	V	10 - Level 3			
Immunity to dissipated shock waves	Conforming to IEC/EN 61000-4-5		**Common mode**	**Serial mode**	**Common mode**	**Serial mode**
	Relay outputs and supply	kV	4	2	–	–
	⎓ 24 V inputs	kV	1	1	1	1
	∿ 100…240 V inputs	kV	2	1	2	1
	Voltage inputs	kV	–	–	4	2
	Communication	kV	2	–	2	–
	Temperature sensor (IT1/IT2)	kV	1	0.5	–	–

Altitude derating		**2000 m**	**3000 m**	**3500 m**	**4000 m**	**4500 m**
	Rated operational voltage (Ui)	1	0.93	0.87	0.8	0.7
	Max. operating temperature	1	0.93	0.92	0.9	0.88

(1) Certain certifications are pending; please consult your Customer Care Centre.
(2) Without modifying the contact states, in the most unfavorable direction.
(3) This product has been designed for use in environment A and in B, it may cause unwanted electromagnetic disturbance to other devices, which may require the implementation of adequate mitigation measures.

TeSys T

Controller and extension module characteristics

Product type				Controllers		Extension modules	
				LTM R●●●BD	LTM R●●●FM	LTM EV40BD	LTM EV40FM
Control supply							
Operational voltage (U)	Conforming to IEC/EN 60947-1		V	⎓ 24	∿ 100…240	–	
Resistance to voltage dips	Conforming to IEC/EN 61000-4-11		V	0 for 3 ms 70 % of U for 500 ms		–	
Associated protection			A	gG fuse, 0.5		–	
Operational voltage	Limit values		V	⎓ 20.4…26.24	∿ 93.5…264	–	
Current consumption	50/60 Hz		mA	⎓ 56…127	∿ 8…62.8	–	
Connectors	Pitch		mm	5.08		5.08	
Flexible cable without cable end	1 conductor		mm²	0.2…2.5		0.2…2.5	
	2 identical conductors		mm²	0.2…1.5		0.2…1.5	
Flexible cable with cable end							
Without insulated ferrule	1 conductor		mm²	0.25…2.5		0.25…2.5	
	2 identical conductors		mm²	0.5…1.5		0.5…1.5	
With insulated ferrule	1 conductor		mm²	0.25…2.5		0.25…2.5	
	2 identical conductors		mm²	0.2…1		0.2…1	
Solid cable without cable end	1 conductor		mm²	0.2…2.5		0.2…2.5	
	2 identical conductors		mm²	0.2…1		0.2…1	
Conductor size				AWG 24 to AWG 14		AWG 24 to AWG 14	
Tightening torque			N.m	0.5…0.6		0.5…0.6	
Flat screwdriver			mm	3		3	
Input characteristics							
Nominal values	Conforming to IEC/EN 61131-1			Type 1 positive logic (⎓: resistive, ∿: capacitive)			
	Voltage		V	⎓ 24	∿ 100…240	⎓ 24	∿ 100…240
	Current		mA	⎓ 7	∿ 3.1 for 100 V ∿ 7.5 for 240 V	⎓ 7	∿ 3.1 for 100 V ∿ 7.5 for 240 V
Logic inputs	Logic state 1	Voltage	V	15 min	79 < U < 264	15 min	79 < U < 264
		Current	mA	2 min…15 max	2 min at 110 V… 3 min at 220 V	2 min…15 max	2 min at 110 V… 3 min at 220 V
	Logic state 0	Voltage	V	5 max	0 < U < 40	5 max	0 < U < 40
		Current	mA	15 max	15 max	15 max	15 max
Response time	Change to state 1		ms	15	25	15	25
	Change to state 0		ms	5	25	5	25
Output characteristics							
Type				Volt free, single break			
Load	∿			250 V / 5 A B300			
	⎓			30 V / 5 A			
Permissible power in cat. AC-15	For 500 000 operating cycles		VA	480 / Ie max: 2 A			
Permissible power in cat. DC-13	For 500 000 operating cycles		W	30 / Ie max: 1.25 A			
Associated protection			A	gG fuse, 4			
Max. frequency			Hz	2			
Max. operating level			op. cycles/h	1800			
Response time	Change to state 1		ms	10 max			
	Change to state 0		ms	10 max			
Measurement details							
Current				1 % for the 0.4…8 A and 1.35…27 A ranges 2 % for the 5…100 A range			
Voltage				1 % from 100 to 830 V			
Earth fault current	Internal measurement without earth fault toroid			5…15 % for current > 0.1 A in the 0.4…8 A range current > 0.2 A in the 1.35…27 A range current > 0.3 A in the 5…100 A range			
	External measurement with earth fault toroid			< 5 % or 0.01 A			
Temperature measurement				2 %			
Power factor				10 %			
Active and reactive power				15 %			
Internal clock				±30 min / year			

Presentation: pages B12/16 to B12/26
Characteristics: pages B12/27 to B12/31
Dimensions, mounting: pages B12/32 to B12/33
Schemes: pages B12/34 to B12/37
Combination for customer assembly: pages B12/38 to B12/41

TeSys T

Bus and network characteristics

Type of bus/network	Modbus	CANopen	DeviceNet	Profibus DP	Ethernet
Physical interface	2-wire RS 485	ISO 11898	ISO 11898	polarised 2-wire RS 485	IEEE 802.3
Addressing	1 to 247	1 to 127	1 to 64	1 to 125	0 to 159 (1)
Transmission speeds	1.2 to 19.2 kb/s	10, 20, 50, 125, 250, 500, 800 and 1000 kb/s + Auto baud	125 to 500 kb/s	9.6 kb to 12 Mb/s	10/100 Mb/s, with automatic recognition
Connections	RJ45/terminal block	9-way SUB-D/ terminal block	Terminal block	9-way SUB-D/ terminal block	RJ45
Cables	2 shielded twisted pairs	4 twisted, shielded wires	4 twisted, shielded wires	2 shielded twisted pairs, type A	2 shielded twisted pairs

LTM CU operator control unit

Environment

Conforming to standards			IEC/EN 61131-2, UL60947-4-1A, CSA 22-2 n°60947-4-1
Product certifications			UL, CSA, CE, EAC/GOST, RCM/CTIC'K
Ambient air temperature around the device	Storage	°C	-40…+80
	Operation	°C	-20…+60
Relative humidity			15…95 % without condensation
Protective treatment	Conforming to IEC/EN 60068-2-30		12 x 24 hour cycles
Degree of protection	Conforming to IEC 60947-1		IP54
Shock resistance	Conforming to IEC/EN 60068-2-27		15 gn / 11ms
Vibration resistance	Conforming to IEC/EN 60068-2-6 5…300 Hz		4 gn
Flame resistance	Conforming to IEC 60947-1	°C	650
	Conforming to UL 94		V2

Electrical characteristics

Supply to the product			Powered via the controller
Maximum current		mA	140
Maximum power dissipated		W	1
Resistance to electromagnetic discharge	Conforming to IEC/EN 61000-4-2	kV	In open air: 8. Level 3 On contact: 4. Level 3
Immunity to radiated electromagnetic interference	Conforming to IEC/EN 61000-4-3	V/m	10 - Level 3
Immunity to fast transient bursts	Conforming to IEC/EN 61000-4-4	kV	2, shielded access. Level 3
Immunity to radioelectric fields	Conforming to IEC/EN 61000-4-6	V	10. Level 3
Immunity to shock waves	Conforming to IEC/EN 61000-4-5	kV	2, shielded access. Level 3

Physical characteristics

Mounting			Flush mounted
Display			Backlit LCD
Signalling			By 4 LEDs
Cabling			RJ45

(1) For DHCP, stored IP, adressing limited by subnet mask.

TeSys T

LT6 CT●●●● external current transformer characteristics

Conforming to standards		IEC 60185, BS 7626			
Precision		Class 5P			
Precision limit factor		15			
Rated insulation voltage (Ui)		690			
Maximum operating temperature	**°C**	50			
Transformer ratio	**A**	100/1	200/1	400/1	800/1
Diameter of conductor passage hole	**mm**	35	35	35	35
Maximum cabling c.s.a.	**mm²**	30 x 10	30 x 10	30 x 10	incorporated (1)

Earth fault toroid characteristics

Toroid type		**50437**	**50438**	**50439**	**50440**	**50441**	**50442**	**50485**	**50486**
Rated insulation voltage Ui	**V**	1000							
Operating temperature	**°C**	- 35…+ 70							
Protection index		IP30 (connections IP20)							
Transformer ratio		1/1000							
Rated operational current Ie	**A**	65	85	160	250	400	630	85	250
Max. conductor c.s.a. per phase	**mm²**	25	50	95	240	2 x 185	2 x 240	50	240

DA1 TT●● probe characteristics

Conforming to standards			IEC 60034-11 mark A
Economy resistor	At 25 °C	Ω	3 x 250 in series
Rated operational voltage (Ue)	Per probe	**V**	⎓ 2.5 max
Rated insulation voltage (Ui)		**kV**	2.5
Insulation			Reinforced
Length of connecting cables	Between probes	**mm**	250
	Between probe and motor terminal plate	**m**	1

Guaranteed operating zones: example with 3 probes type DA1 TT●●● (250 Ω at 25 °C) in series, conforming to standard EC 60034-11, mark A.

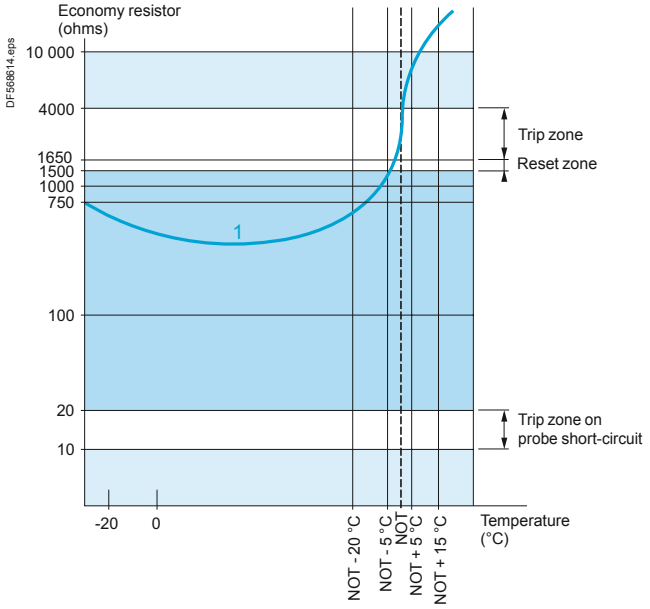

1 3 probes type DA1●●● (250 Ω at 25 °C) in series.

NOT: Nominal Operating Temperature.

Protection unit tripped.

Protection unit reset.

(1) Electrical connection to be made using M10 bolt.

Cold state curves

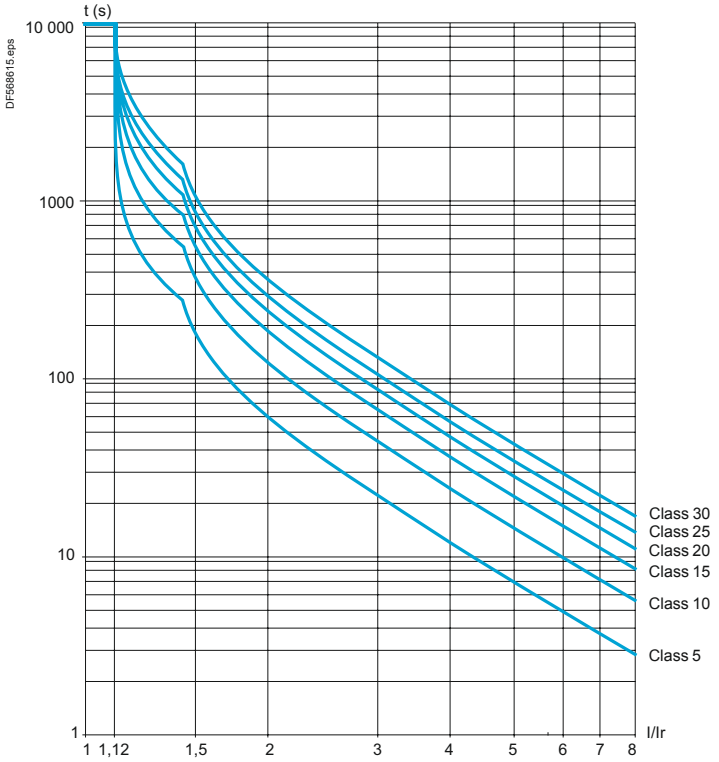

Hot state curves

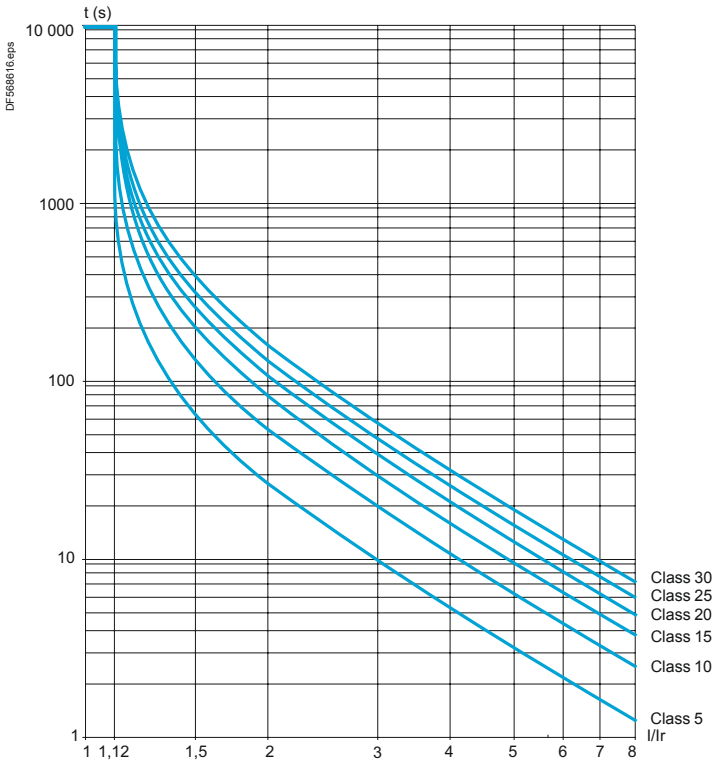

Protection components
TeSys T Motor Management System

TeSys T

LTM R●● controllers

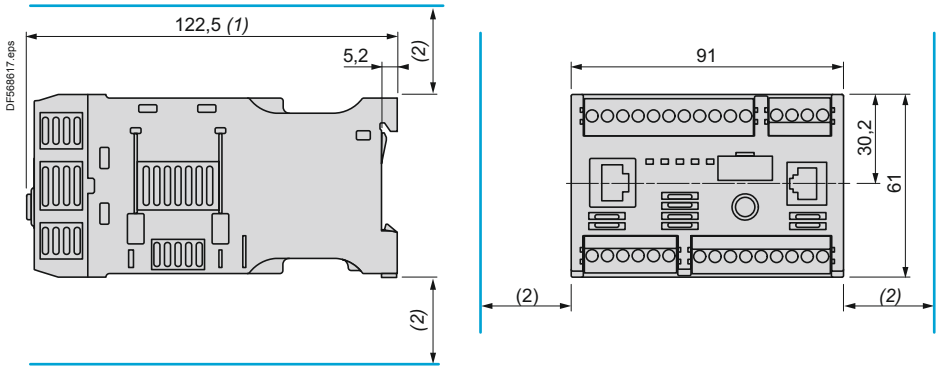

LTM EV40●● extension modules

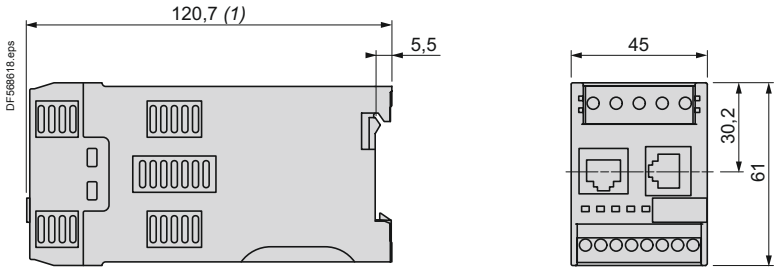

LTM CU operator control unit

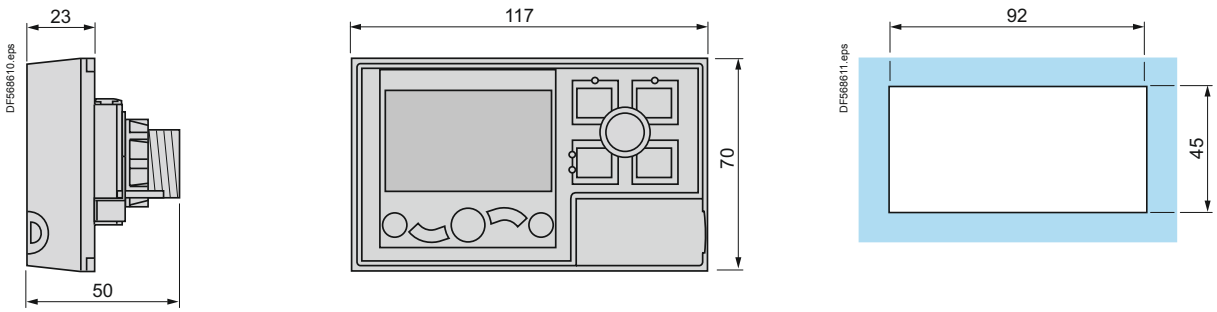

LTM 9F

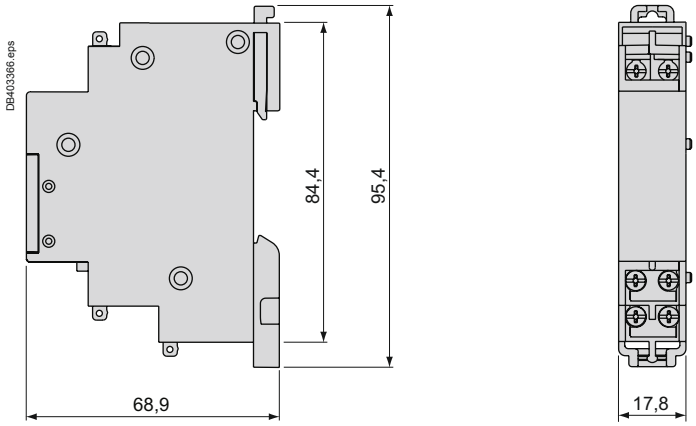

(1) 140 mm with RJ45 connector for connection to extension module and to network,
166 mm with Profibus DP/CANopen connector.
(2) Leave a gap around the device of: 9 mm at 45 °C, 9 to 40 mm from 45 to 50 °C, 40 mm at 60 °C.

Current transformers

LT6 CT

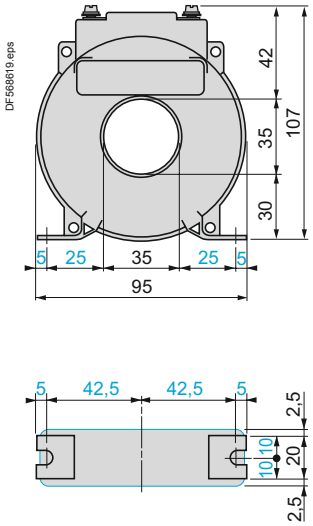

HMI terminal

XBT N410

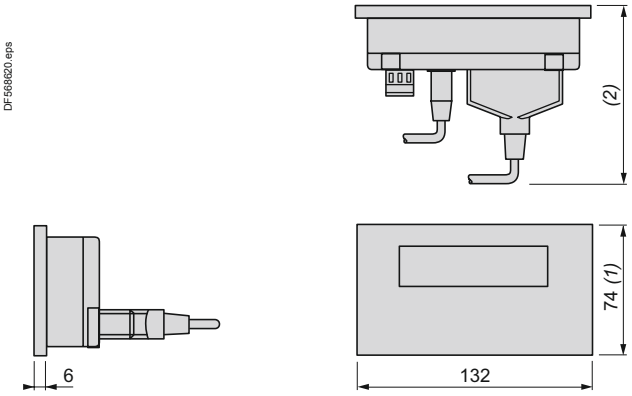

(1) 104 mm with fixing clips (supplied with the product).
*(2) 58 mm with SUB-D 25-way elbowed cable **XBT Z9680** for Twido, TSX Micro and Premium or **XBT Z998** for Advantys STB.*
*104 mm with SUB-D 25-way cable **XBT Z68/Z9681** for Twido, TSX Micro and Premium*

Earth fault toroids

50437 and 50438

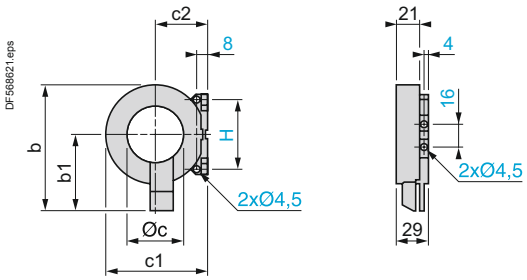

Type	b	b1	Øc	c1	c2	H
50437	83	53	30	60	31	50
50438	109	66	50	87	45	60

50439, 50440 and 50441

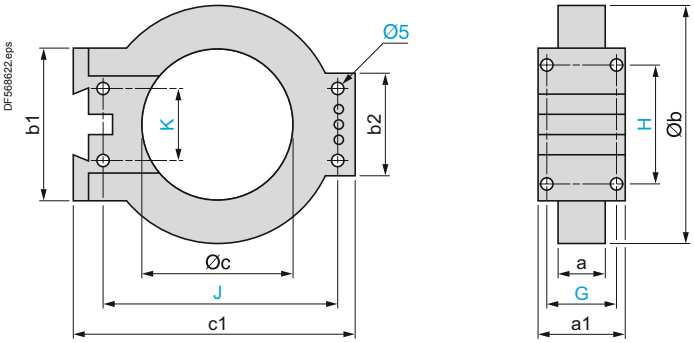

Type	a	a1	Øb	b1	b2	Øc	c1	G	H	J	K
50439	26.5	44	122	80	55	80	150	35	65	126	40
50440	26.5	44	164	80	55	120	190	35	65	166	40
50441	29	46	256	120	90	196	274	37	104	254	60

50442

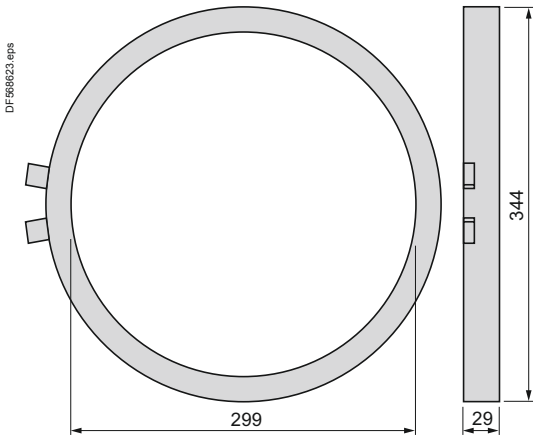

50485 and 50486

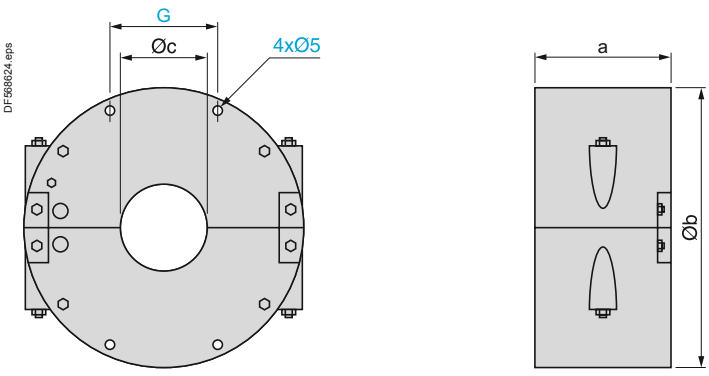

Type	a	Øb	Øc	G
50485	72	148	46	57
50486	78	224	110	76

Presentation: pages B12/16 to B12/26
Characteristics: pages B12/27 to B12/31
Dimensions, mounting: pages B12/32 to B12/33
Schemes: pages B12/34 to B12/37
Combination for customer assembly: pages B12/38 to B12/41

Schemes

LTMR●●FM wiring with LTM 9F filter

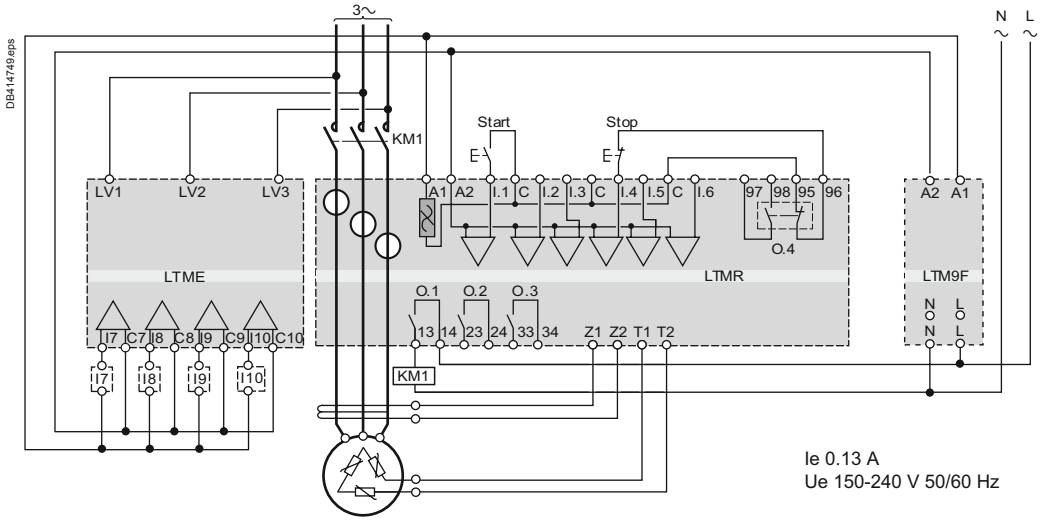

Note: *inputs MUST be connected across the common terminals (C).*

Overload mode

3-wire local-control

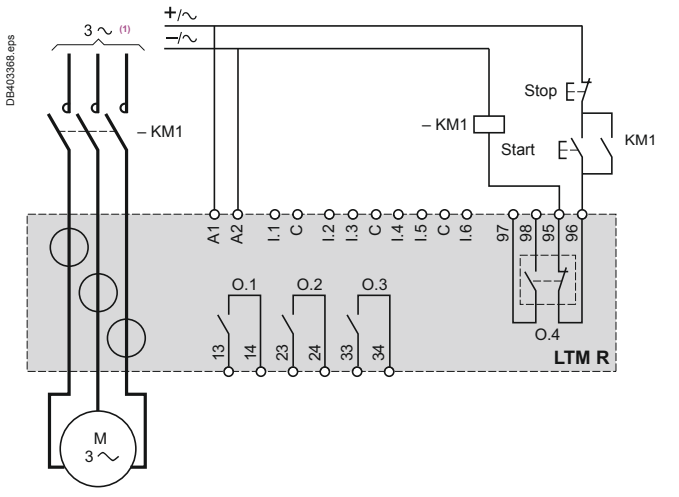

Independent mode

3-wire local-control\

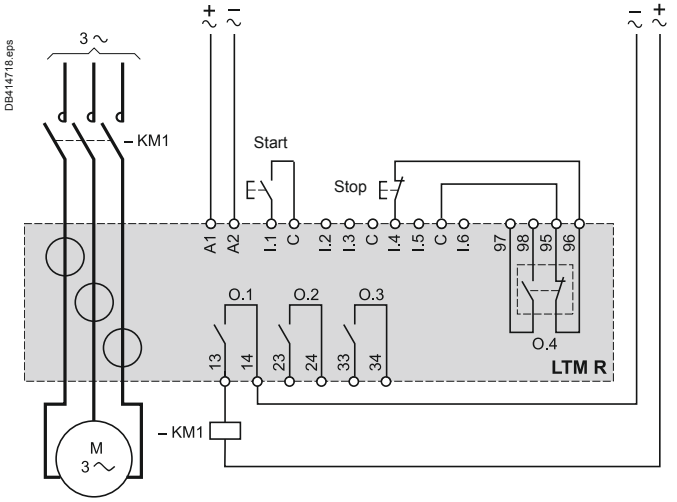

(1) Connection of a single-phase motor is possible. In this case, do not use the central current transformer.

2-wire local-control

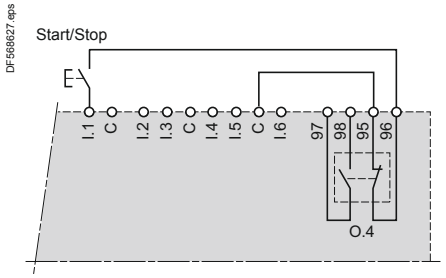

3-wire with switchable local/network control

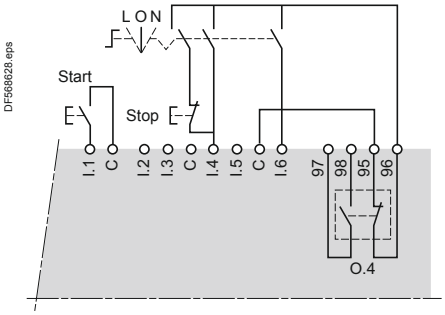

2-wire with switchable local/network control

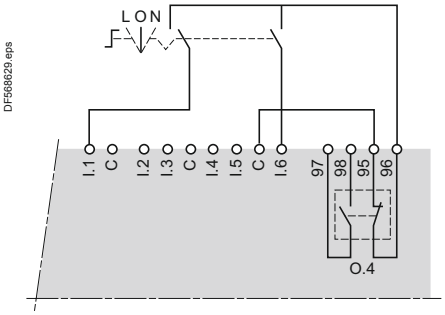

L: Local control
O: Stop
N: Network control

TeSys T

Schemes

Reverser mode

3-wire local-control

DB414719.eps

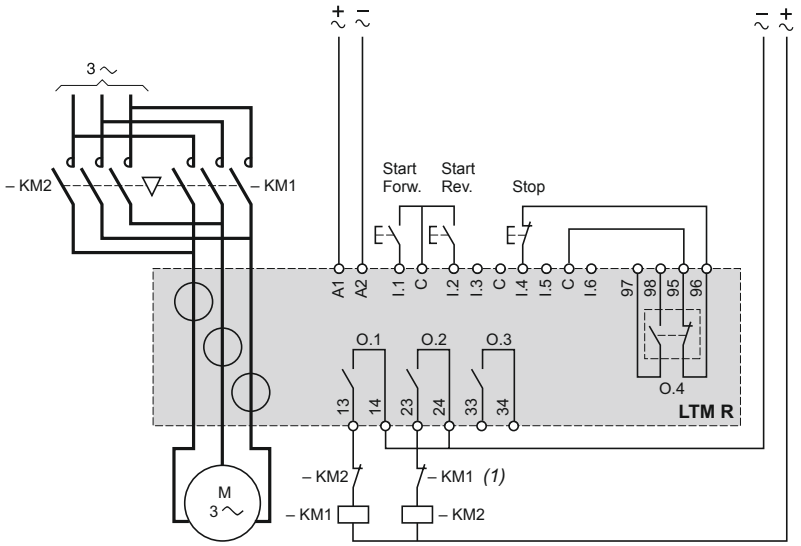

2-step mode, star-delta application

3-wire local-control

DB414720.eps

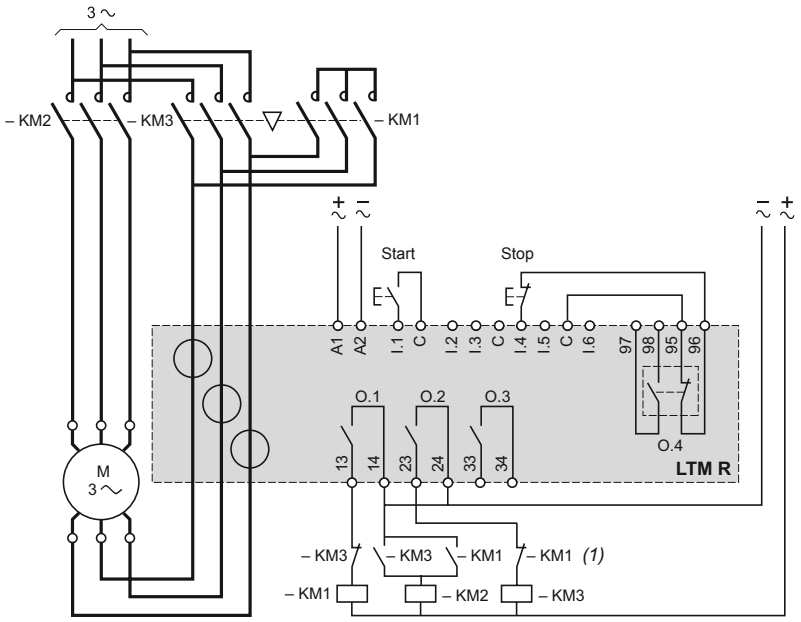

(1) Contacts for interlocking KM1 and KM2 are not obligatory because the controller electronically interlocks outputs O.1 and O.2.

TeSys T

Schemes

2-step mode, primary resistor application

3-wire local-control

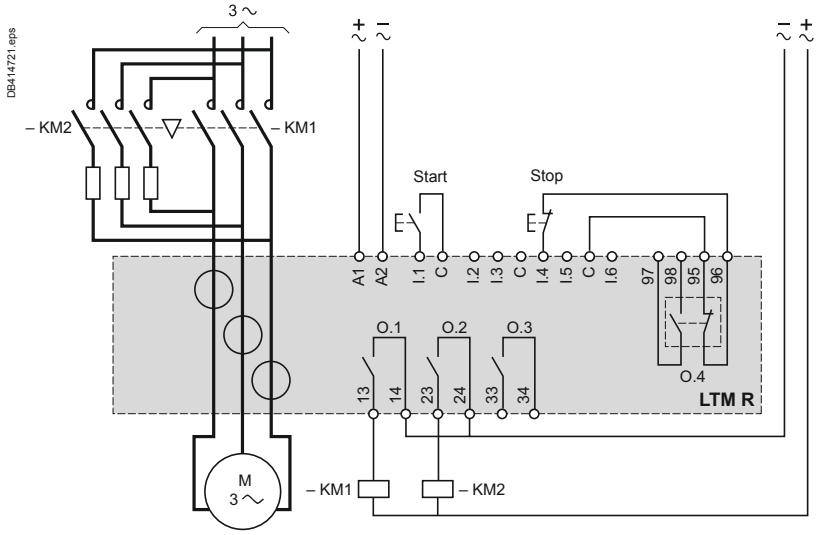

2-speed mode, Dahlander application

3-wire local-control

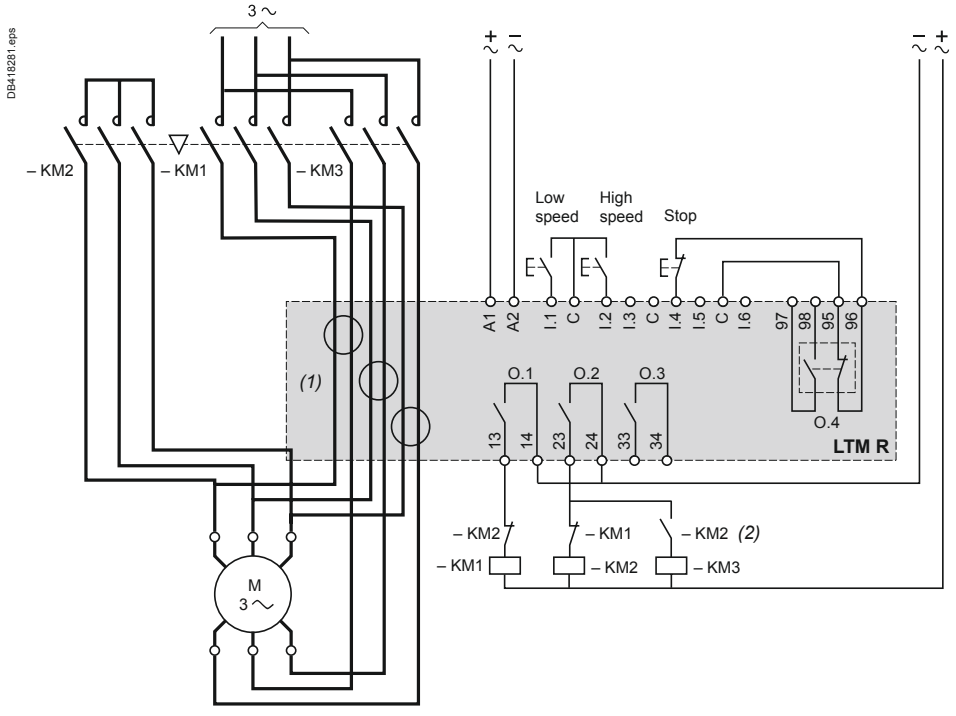

(1) For a Dahlander application, all the power cables must pass through current transformers. The controller can also be placed upstream of the contactor. In this case, and if the Dahlander motor is used in "variable torque" mode, all the cables downstream of the contactors must be of identical size.
(2) Contacts for interlocking KM1 and KM2 are not obligatory because the controller electronically interlocks outputs O.1 and O.2.

Schemes

Earth fault toroid and motor temperature probe connection

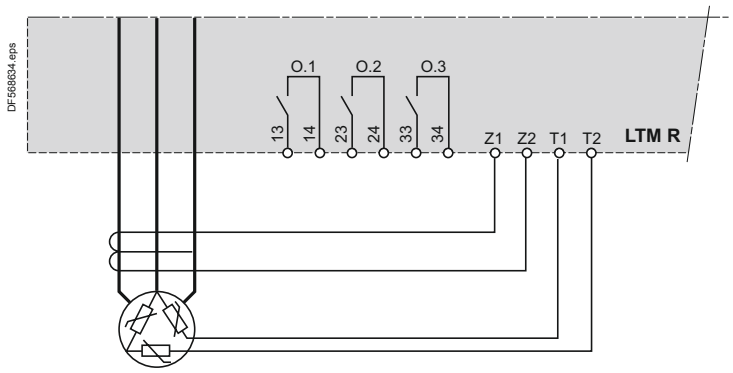

Connection of outputs for motor control mode function

Without intermediate relay

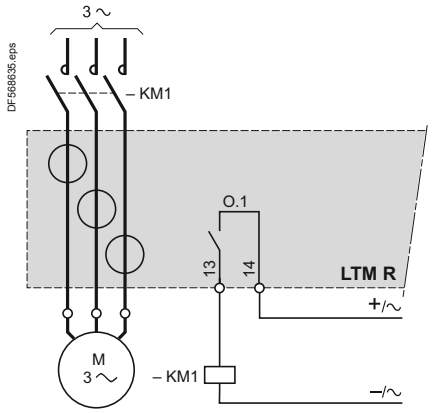

With intermediate relay

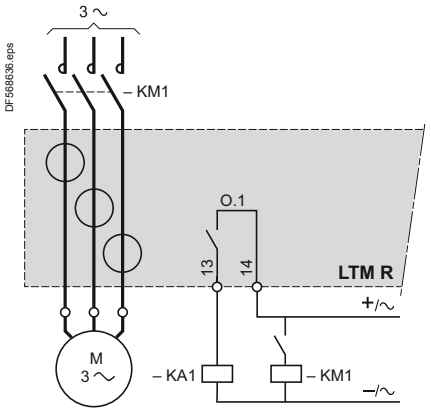

TeSys T

0.37 to 355 kW at 400/415 V: type 2 coordination

With switch-disconnector, contactor and class 10 controller

Standard power ratings of 3-phase motors 50/60 Hz in category AC-3 400/415 V		Switch-disconnector	aM fuses		Contactor	TeSys T controller	External current transformer
P	Ie	Reference (1)	Size	Rating	Reference (2)	Reference	Reference
kW	A			A			
0.37	1.1	GS1DD	10 x 38	2	LC1D09	LTMR08●●	–
0.55	1.5	GS1DD	10 x 38	2	LC1D09	LTMR08●●	–
0.75	1.9	GS1DD	10 x 38	4	LC1D09	LTMR08●●	–
1.1	2.7	GS1DD	10 x 38	4	LC1D09	LTMR08●●	–
1.5	3.6	GS1DD	10 x 38	4	LC1D09	LTMR08●●	–
2.2	4.9	GS1DD	10 x 38	6	LC1D09	LTMR08●●	–
3	6.5	GS1DD	10 x 38	8	LC1D09	LTMR27●●	–
4	8.5	GS1DD	10 x 38	10	LC1D09	LTMR27●●	–
5.5	11.5	GS1DD	10 x 38	16	LC1D12	LTMR27●●	–
7.5	15.5	GS1DD	10 x 38	16	LC1D25	LTMR27●●	–
10	19	GS●F	14 x 51	25	LC1D25	LTMR27●●	–
11	22	GS●F	14 x 51	25	LC1D25	LTMR27●●	–
15	29	GS●F	14 x 51	32	LC1D32	LTMR100●●	–
18.5	35	GS●F	14 x 51	40	LC1D40A	LTMR100●●	–
22	41	GS●J	22 x 58	50	LC1D50A	LTMR100●●	–
30	55	GS●J	22 x 58	80	LC1D65A	LTMR100●●	–
37	66	GS●J	22 x 58	100	LC1D80	LTMR100●●	–
45	80	GS●J	22 x 58	100	LC1D95	LTMR100●●	–
55	97	GS●K	T00	125	LC1D115	LTMR08●●	LT6CT2001
75	132	GS●L	T0	160	LC1D150	LTMR08●●	LT6CT2001
90	160	GS●N	T1	200	LC1F185	LTMR08●●	LT6CT2001
110	195	GS●N	T1	250	LC1F225	LTMR08●●	LT6CT4001
132	230	GS●QQ	T2	315	LC1F265	LTMR08●●	LT6CT4001
160	280	GS●QQ	T2	355	LC1F400	LTMR08●●	LT6CT4001
200	350	GS2S	T3	500	LC1F400	LTMR08●●	LT6CT8001
250	430	GS2S	T3	500	LC1F500	LTMR08●●	LT6CT8001
315	540	GS2S	T3	630	LC1F630	LTMR08●●	LT6CT8001
355	610	GS2V	T4	800	LC1F630	LTMR08●●	LT6CT8001

(1) GS●: GS1 for direct operator, GS2 for external operator.
(2) For reversing operation, replace the prefix LC1 with LC2.

TeSys T

0.06 to 250 kW at 400/415 V: type 2 coordination

With Circuit breaker, contactor and class 10 controller

Standard power ratings of 3-phase motors 50/60 Hz in category AC-3 400/415 V			Circuit breaker	Contactor	TeSys T controller	External current transformer
P	Ie	Icc	Reference	Reference	Reference	Reference
kW	A	kA				
0.06	0.2	130	**GV2L03**	**LC1D09**	**LTMR08●●**	–
0.09	0.3	130	**GV2L03**	**LC1D09**	**LTMR08●●**	–
0.12	0.44	130	**GV2L04**	**LC1D09**	**LTMR08●●**	–
0.18	0.6	130	**GV2L04**	**LC1D09**	**LTMR08●●**	–
0.25	0.85	130	**GV2L05**	**LC1D09**	**LTMR08●●**	–
0.37	1.1	130	**GV2L05**	**LC1D09**	**LTMR08●●**	–
0.55	1.5	130	**GV2L06**	**LC1D09**	**LTMR08●●**	–
0.75	1.9	130	**GV2L07**	**LC1D09**	**LTMR08●●**	–
1.1	2.7	130	**GV2L07**	**LC1D18**	**LTMR08●●**	–
1.5	3.6	130	**GV2L08**	**LC1D18**	**LTMR08●●**	–
2.2	4.9	130	**GV2L10**	**LC1D18**	**LTMR08●●**	–
3	6.5	130	**GV2L14**	**LC1D18**	**LTMR08●●**	–
4	8.5	130	**GV2L14**	**LC1D18**	**LTMR27●●**	–
5.5	11.5	130	**GV2L16**	**LC1D25**	**LTMR27●●**	–
7.5	15.5	50	**GV2L20**	**LC1D25**	**LTMR27●●**	–
9	18.1	50	**GV2L22**	**LC1D25**	**LTMR27●●**	–
11	22	50	**GV2L22**	**LC1D25**	**LTMR27●●**	–
15	29	50	**GV3L32**	**LC1D40A**	**LTMR100●●**	–
18.5	35	50	**GV3L40**	**LC1D50A**	**LTMR100●●**	–
22	41	50	**GV3L50**	**LC1D50A**	**LTMR100●●**	–
30	55	50	**GV3L65**	**LC1D65A**	**LTMR100●●**	–
37	66	70	**NSX80HMA**	**LC1D80**	**LTMR100●●**	–
45	80	25	**NSX100HMA**	**LC1D115**	**LTMR100●●**	–
45	80	70	**NSX100HMA**	**LC1D115**	**LTMR100●●**	–

TeSys T

0.06 to 250 kW at 400/415 V: type 2 coordination

With Circuit breaker, contactor and class 10 controller

Standard power ratings of 3-phase motors 50/60 Hz in category AC-3 400/415 V			Circuit breaker	Contactor	TeSys T controller	External current transformer
P	Ie	Icc	Reference	Reference	Reference	Reference
kW	A	kA				
55	97	36	**NSX160NMA**	**LC1D115**	**LTMR08●●**	**LT6CT2001**
55	97	70	**NSX160HMA**	**LC1D115**	**LTMR08●●**	**LT6CT2001**
75	132	36	**NSX160NMA**	**LC1D150**	**LTMR08●●**	**LT6CT2001**
75	132	70	**NSX160HMA**	**LC1D150**	**LTMR08●●**	**LT6CT2001**
90	160	36	**NSX250NMA**	**LC1F185**	**LTMR08●●**	**LT6CT2001**
90	160	70	**NSX250HMA**	**LC1F185**	**LTMR08●●**	**LT6CT2001**
110	195	36	**NSX250NMA**	**LC1F225**	**LTMR08●●**	**LT6CT2001**
110	195	70	**NSX250HMA**	**LC1F225**	**LTMR08●●**	**LT6CT2001**
132	230	70	**NSX400HMA**	**LC1F265**	**LTMR08●●**	**LT6CT4001**
132	230	130	**NSX400LMA**	**LC1F265**	**LTMR08●●**	**LT6CT4001**
160	280	70	**NSX400HMA**	**LC1F330**	**LTMR08●●**	**LT6CT4001**
160	280	130	**NSX400LMA**	**LC1F330**	**LTMR08●●**	**LT6CT4001**
200	350	70	**NSX630HMA**	**LC1F400**	**LTMR08●●**	**LT6CT4001**
200	350	130	**NSX630LMA**	**LC1F400**	**LTMR08●●**	**LT6CT4001**
220	388	70	**NSX630HMA**	**LC1F500**	**LTMR08●●**	**LT6CT4001**
220	388	130	**NSX630LMA**	**LC1F500**	**LTMR08●●**	**LT6CT4001**
250	430	70	**NSX630HMA**	**LC1F500**	**LTMR08●●**	**LT6CT6001**
250	430	130	**NSX630LMA**	**LC1F500**	**LTMR08●●**	**LT6CT6001**

Substitution table

	Old range LT6P multifunction protection relay			New range TeSys T controllers		
Motor current	Reference	Reference	External current transformer Reference	Reference	Reference	External current transformer Reference
	∼ 100…240 V	⎓ 24 V		∼ 100…240 V	⎓ 24 V	
I < 5 A	LT6P0M005FM	LT6P0M005S144	–	**LTMR08●FM**	**LTMR08●BD**	**–**
5 A < I < 25 A	LT6P0M025FM	LT6P0M025S144	–	**LTMR27●FM**	**LTMR27●BD**	**–**
25 A < I < 100 A	LT6P0M005FM	LT6P0M005S144	LT6CT1001	**LTMR100●FM**	**LTMR100●BD**	**–**
100 A < I < 200 A	LT6P0M005FM	LT6P0M005S144	LT6CT2001	**LTMR08●FM**	**LTMR08●BD**	**LT6CT2001**
200 A < I < 400 A	LT6P0M005FM	LT6P0M005S144	LT6CT4001	**LTMR08●FM**	**LTMR08●BD**	**LT6CT4001**
400 A < I < 800 A	LT6P0M005FM	LT6P0M005S144	LT6CT8001	**LTMR08●FM**	**LTMR08●BD**	**LT6CT8001**

TeSys T

0.37 to 400 kW at 690 V: type 2 coordination

With switch-disconnector, contactor and class 10 controller

Standard power ratings of 3-phase motors 50/60 Hz in category AC-3		Switch-disconnector (1)	aM fuses		Contactor	TeSys T controller	External current tranformer
P	Ie	Reference	Size	Rating	Reference	Reference	Reference
kW	A			A			
0.37	0.64	**GS●F**	14 x 51	1	**LC1D09**	**LTMR08●●**	–
0.55	0.87	**GS●F**	14 x 51	2	**LC1D09**	**LTMR08●●**	–
0.75	1.1	**GS●F**	14 x 51	2	**LC1D09**	**LTMR08●●**	–
1.1	1.6	**GS●F**	14 x 51	2	**LC1D09**	**LTMR08●●**	–
1.5	2.1	**GS●F**	14 x 51	4	**LC1D09**	**LTMR08●●**	–
2.2	2.8	**GS●F**	14 x 51	4	**LC1D09**	**LTMR08●●**	–
3	3.8	**GS●F**	14 x 51	6	**LC1D09**	**LTMR08●●**	–
4	4.9	**GS●F**	14 x 51	6	**LC1D09**	**LTMR08●●**	–
5.5	6.7	**GS●F**	14 x 51	8	**LC1D25**	**LTMR08●●**	–
7.5	8.9	**GS●F**	14 x 51	10	**LC1D25**	**LTMR27●●**	–
11	12.8	**GS●F**	14 x 51	16	**LC1D25**	**LTMR27●●**	–
15	17	**GS●G**	T000	20	**LC1D32**	**LTMR27●●**	–
18.5	21	**GS●G**	T000	25	**LC1D32**	**LTMR27●●**	–
22	24	**GS●G**	T000	32	**LC1D40A**	**LTMR27●●**	–
30	32	**GS●G**	T000	40	**LC1D50A**	**LTMR100●●**	–
37	39	**GS●J**	22 x 58	50	**LC1D65A**	**LTMR100●●**	–
45	47	**GS●J**	22 x 58	63	**LC1D80**	**LTMR100●●**	–
55	57	**GS●J**	22 x 58	80	**LC1D115**	**LTMR100●●**	–
75	77	**GS●KK**	T00	100	**LC1D115**	**LTMR100●●**	–
90	93	**GS●KK**	T00	125	**LC1F150**	**LTMR08●●**	**LT6CT2001**
110	113	**GS●KK**	T00	125	**LC1F185**	**LTMR08●●**	**LT6CT2001**
132	134	**GS●L**	T0	160	**LC1F265**	**LTMR08●●**	**LT6CT2001**
160	162	**GS●N**	T1	200	**LC1F265**	**LTMR08●●**	**LT6CT2001**
200	203	**GS●N**	T1	250	**LC1F330**	**LTMR08●●**	**LT6CT4001**
220	224	**GS●QQ**	T2	250	**LC1F400**	**LTMR08●●**	**LT6CT4001**
250	250	**GS●QQ**	T2	315	**LC1F400**	**LTMR08●●**	**LT6CT4001**
290	292	**GS●QQ**	T2	355	**LC1F500**	**LTMR08●●**	**LT6CT4001**
315	313	**GS●QQ**	T2	355	**LC1F500**	**LTMR08●●**	**LT6CT4001**
355	354	**GS2S**	T3	400	**LC1F630**	**LTMR08●●**	**LT6CT4001**
400	400	**GS2S**	T3	500	**LC1F630**	**LTMR08●●**	**LT6CT8001**

(1) GS●: GS1 for direct operator, GS2 for external operator.

Control Panel Technical guides

> Discover our technical guides collection. They are dedicated to frequent issues faced when designing an installing a control panel.

> Free download on www.schneider-electric.com with the document reference or from the QR codes.



How to ensure trouble-free approval of your UL-compliant control panels

> Ref: CPTG005_EN

> Click on QR code to download



How to prevent machine malfunctions and electronic damage due to voltage surges

> Ref: CPTG002_EN

> Click on QR code to download

Control Panel Technical guides

> Discover our technical guides collection. They are dedicated to frequent issues faced when designing an installing a control panel.

> Free download on www.schneider-electric.com with the document reference or from the QR codes.

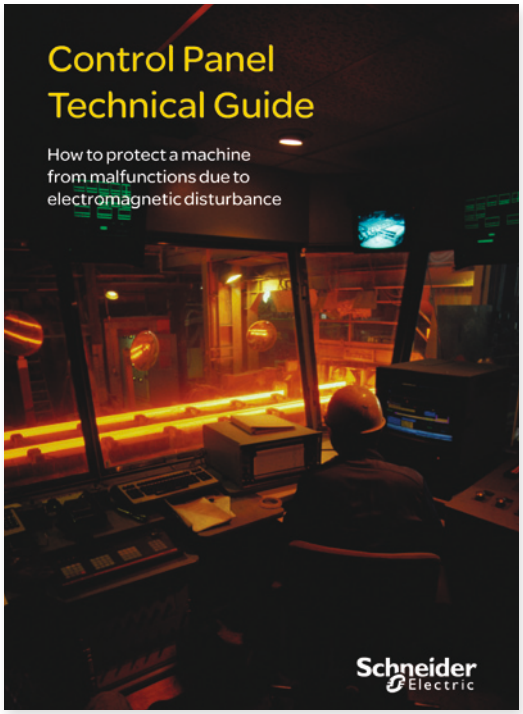

How to protect a machine from malfunctions due to electromagnetic disturbances

> Ref: CPTG003_EN

> Click on QR code to download

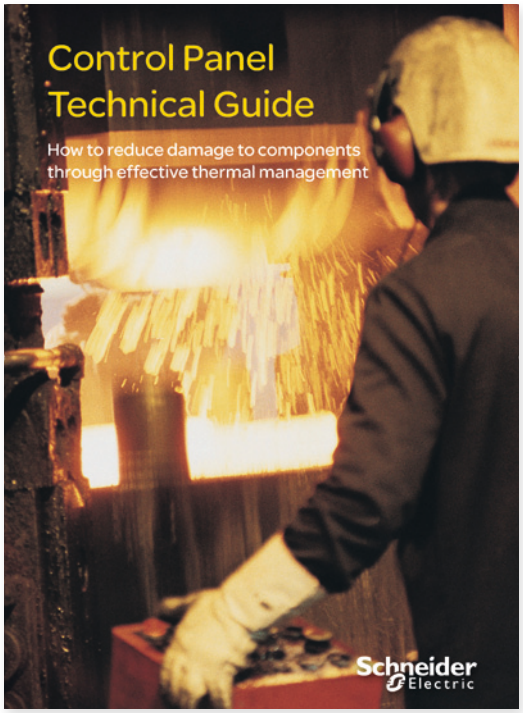

How to reduce damage to components through effective thermal management inside an enclosure

> Ref: CPTG001_EN

> Click on QR code to download

Control Panel Technical guides

> Discover our technical guides collection. They are dedicated to frequent issues faced when designing an installing a control panel.

> Free download on www.schneider-electric.com with the document reference or from the QR codes.

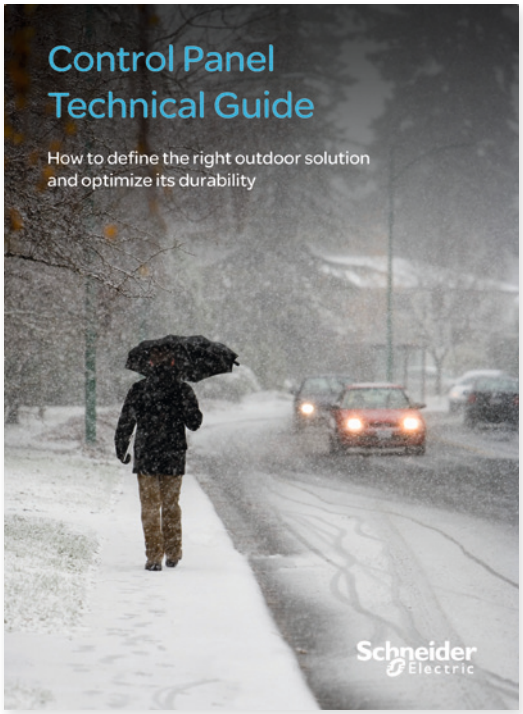

How define the right outdoor enclosure and optimize its durability

> Ref: CPTG006_EN

> Click on QR code to download



How to prevent condensation inside an enclosure

> Ref: UE12MK03EN

> Click on QR code to download

Control Panel Technical guides

> Discover our technical guides collection. They are dedicated to frequent issues faced when designing an installing a control panel.

> Free download on www.schneider-electric.com with the document reference or from the QR codes.



How to select the appropriate motor starters for your HVAC equipments

> Ref: CPTG007_EN

> Click on QR code to download

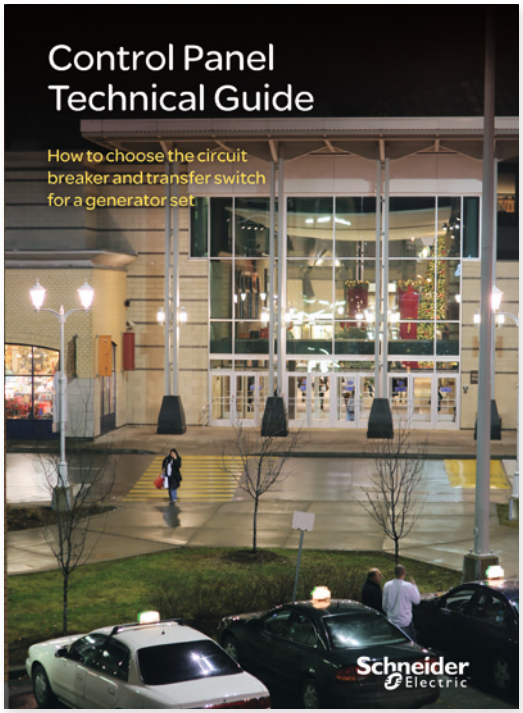

How to choose the circuit breaker and transfer switch for a generator set

> Ref: CPTG008_EN

> Click on QR code to download

Control Panel Technical guides

> Discover our technical guides collection. They are dedicated to frequent issues faced when designing an installing a control panel.

> Free download on www.schneider-electric.com with the document reference or from the QR codes.



How to choose the contactors for elevator machinery?

> Ref: CPTG009_EN

> Click on QR code to download



How to select the appropriate motor control system for your pump

> Ref: CPTG010_EN

> Click on QR code to download



Green Premium™

Endorsing the most eco-friendly products in the industry

Green Premium™
Product

Green Premium is the only label that allows you to effectively develop and promote an environmental policy whilst preserving your business efficiency. This ecolabel guarantees compliance with the most up-to-date environmental regulations, but it does more than this.

Over 75% of Schneider Electric manufactured products have been awarded the Green Premium ecolabel

Discover what we mean by green ….

Check your products!

Schneider Electric's Green Premium ecolabel is committed to offering transparency, by disclosing extensive and reliable information related to the environmental impact of its products:

RoHS

Schneider Electric products are subject to RoHS requirements at a worldwide level, even for the many products that are not required to comply with the terms of the regulation. Compliance certificates are available for products that fulfil the criteria of this European initiative, which aims to eliminate hazardous substances.

REACh

Schneider Electric applies the strict REACh regulation on its products at a worldwide level, and discloses extensive information concerning the presence of SVHC (Substances of Very High Concern) in all of these products.

PEP: Product Environmental Profile

Schneider Electric publishes the most complete set of environmental data, including carbon footprint and energy consumption data for each of the lifecycle phases on all of its products, in compliance with the ISO 14025 PEP ecopassport program. PEP is especially useful for monitoring, controlling, saving energy, and/or reducing carbon emissions.

EoLI: End of Life Instructions

Available at the click of a button, these instructions provide:

- Recyclability rates for Schneider Electric products.
- Guidance to mitigate personnel hazards during the dismantling of products and before recycling operations.
- Parts identification for recycling or for selective treatment, to mitigate environmental hazards/ incompatibility with standard recycling processes.

Enjoy your

NEW TeSys catalogue

1 2 major parts

A Assembled motor starters

B Components

For easier location

2 Panoramas



Illustrated chapter summaries serve as the offer **panorama**

For better offer understanding

3 Technical data



Each chapter compiles detailed product characteristics in a **data book**

For a clearer browsing

4 Datasheet

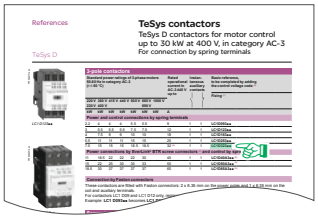



The pdf version has **hyperlinks** on products numbers - simply click to see the **product datasheet** *

** Available for main constituents only and requires web connection.*

For enriching your project documents

Schneider Electric Industries SAS

35, rue Joseph Monier
CS 30323
92506 Rueil Malmaison Cedex
France

RCS Nanterre 954 503 439
Capital social 896 313 776 €
www.schneider-electric.com

As standards, specifications and designs change from time to time, please ask for confirmation of the information given in this publication.

Publication: Schneider Electric Industries SAS
Photos: Schneider Electric
Publishing: Altavia - St Etienne

PEFC 10-31-1247

This document has been printed on ecological paper.

ART960396 © 2016 - Schneider Electric - All rights reserved